METRIC

MIL-PRF-6085D
20 February 98
SUPERSEDING
MIL-L-6085C
5 February 1991

PERFORMANCE SPECIFICATION

LUBRICATING OIL: INSTRUMENT, AIRCRAFT, LOW VOLATILITY

This specification is approved for use by all Departments and Agencies of the Department of Defense.

1 SCOPE

1.1 Scope. This specification covers one grade of aircraft instrument lubricating oil only (see *6.2*). The lubricating oil is identified by military symbol OAI and *NATO Code No. 0-147* (see *6.4*).

2. APPLICABLE DOCUMENTS

2.1 General. The documents listed in this section are specified in *sections 3* and *4* of this specification. This section does not include documents cited in other sections of this specification or recommended for additional information or as examples. While every effort has been made to ensure the completeness of the lists, document users are cautioned that they must meet all specified requirements documents cited *in sections 3* and *4* of this specification, whether or not they are listed.

Beneficial comments (recommendations, additions, deletions) and any pertinent data which may be of use in improving this document should be addressed to: ASD/ENSI, 2530 Loop Road West, Wright-Patterson AFB OH 45433-7101 by using the Standardization Document Improvement Proposal (DD Form 1426) appearing at the end of this document, or by letter.

AMSC N/A FSC 9150

DISTRIBUTION STATEMENT A. Approved for public release; distribution is unlimited.

2.2 Government documents

2.2.1 Specifications and standards. The following specifications and standards form a part of this specification to the extent specified herein. Unless otherwise specified the issues of these documents will be those listed in the issue of the *Department of Defense Index of Specifications and Standards (DODISS)* and supplement thereto, cited in the solicitation. (see *6.3*).

SPECIFICATIONS

FEDERAL

P-D-680	Dry Cleaning and Degreasing Solvent
QQ-S-698	Steel, Carbon (Low-Carbon), Sheets and Strips

STANDARDS

FEDERAL

FED-STD-791	-	Lubricants, Liquid Fuels, and Related Products; Methods of Testing

(Unless otherwise indicated, copies of federal and military specifications, standards, and handbooks are available from the Standardization Documents Order Desk, Building 4D, 700 Robbins Avenue, Philadelphia, PA 19111-5094.)

2.3 Non-Government publications. The following document(s) form a part of this document to the extent specified herein. Unless otherwise specified, the issues of the documents that are DOD adopted are those listed in the issue of the DODISS specified in the solicitation. Unless otherwise specified, the issues of documents not listed in the DODISS are the issues of the documents cited in the solicitation (see *6.3*).

AMERICAN SOCIETY FOR TESTING AND MATERIALS (ASTM)

ASTM A 304		Alloy Steel Bars Subject to End-Quench Hardenability Requirements (DoD adopted)
ASTM A 322		Steel Bars, Alloy, Standard Grades (DoD adopted)
ASTM A 331		Steel Bars, Alloy, Cold-Finished (DoD adopted)
ASTM B 36		Standard Specification for Brass Plate, Sheet, Strip, and Rolled Bar
ASTM D 91	-	Precipitation Number of Lubricating Oils (DoD adopted)
ASTM D 92	-	Flash Point and Fire Points by Cleveland Open Cup (DoD adopted)
ASTM D 97	-	Pour Point of Petroleum Oils, Test for (DoD adopted)
ASTM D 445	-	Kinematic Viscosity of Transparent and Opaque Liquids (and the Calculation of Dynamic Viscosity), Test for (DoD adopted)
ASTM D 972	-	Evaporation Loss of Lubricating Greases and Oils, Test for (DoD adopted)
ASTM D 974	-	Neutralization Number by Color-Indicator Titration (DoD adopted)
ASTM D 1500	-	ASTM Color of Petroleum Products (ASTM Color Scale), Test for (DoD adopted)
ASTM D 1748	-	Rust Protection by Metal Preservatives in the Humidity Cabinet (DoD adopted)
ASTM D 4057	-	Manual Sampling of Petroleum and Petroleum Products (DoD adopted)
ASTM D 4636		Standard Test Method for Corrosiveness and Oxidation Stability of Hydraulic Oils, Aircraft Turbine Engine Lubricants, and Other Highly Refined Oils

(Application for copies should be addressed to the American Society for Testing and Materials, 100 Barr Harbor Drive, West Conshohocken, PA 19428-2959.)

(Non-Government standards and other publications are normally available from the organizations that prepare or distribute the documents. These documents also may be available in or through libraries or other informational services.)

2.4 Order of precedence. In the event of a conflict between the text of this document and the references cited herein, the text of this document takes precedence. Nothing in this document, however, supersedes applicable laws and regulation unless a specific exemption has been obtained.

3. REQUIREMENTS

3.1 Qualification. The instrument oil furnished under this specification shall be a product that is authorized by the qualifying activity for listing on the applicable Qualified Products List (QPL) before contract award (see *4.3.1* and *6.4*). Changes shall not be permitted in the formulation of an approved product unless specific written approval of the qualifying activity is obtained.

3.2 Materials. Aircraft instrument lubricating oil (low volatility) shall consist substantially of synthetic base oil and additive materials to impart oxidation stability and corrosion-protective properties. Certain esters of the dibasic organic acids containing six to ten carbon atoms are known to be suitable for use but are not mandatory. The right is reserved to subject oils of new or unusual composition to such additional tests as are considered necessary to ensure serviceability of the material. Viscosity-temperature coefficient (VI) improvers or pour point depressants shall not be used.

3.3 Properties. The properties of the finished oil shall be as specified in *table I* when tested as specified in *section 4*.

TABLE I. Properties of the finished oil.

Characteristic	Value Maximum
Viscosity in centistokes	
at 54°C (min)	8
at -54°C (max)	12,000
Pour point (max)	-57°C
Flash point (min)	185°C
Precipitation number (max)	0
Acid number	report

3.4 Performance

3.4.1 Corrosion and oxidation stability. When tested as specified in *section 4*, the change in weight of cadmium-plated steel, copper, steel aluminum alloy, and magnesium alloy, when subjected to the action of the oil for 168 hours at 121°C ±1°C, shall be not greater than 0.2 mg per square cm of surface for each strip. There shall be no pitting, etching, or visible corrosion on the surface of any of the metals when viewed under magnification of 20 diameters. Slight discoloration of the surface of the copper will be permitted, but dark brown, gray or black stain shall be cause for rejection.

3.4.2 Resistance to oxidation. When tested as specified in *section 4*, the oil shall not have changed more than ±5 percent from the original viscosity in centistokes at 54.4°C after the oxidation-corrosion test (see *4.4.2*). The neutralization number increase shall be not greater than 0.5 after oxidation. There shall be no evidence of separation of insoluble materials or gumming of the oil.

3.4.3 Low temperature stability. When tested as specified in *section 4*, there shall be no gelling or separation of solid or liquid phases in the oil after storage at a temperature at or below -54°C for 72 hours. The presence of a dense cloud, which does not "settle out", shall not be the cause for rejection.

3.4.4 Evaporation. When tested as specified in *section 4*, there shall be not more than 1.80 percent by weight evaporation loss after the oil has been subjected to the test conditions, at 120°C ±1°C.

3.4.5 Corrosivity. When subjected to the test specified in *section 4*, the test areas of the three discs shall show no evidence of corrosion, pitting or other attack. The third disc may show no more than three spots within the area covered by the clip.

3.5 Color and appearance. When tested as specified in *section 4*, the oil shall be clear, transparent and uniform in appearance, and not darker than No. 5 Union Colorimeter of *ASTM D 1500*.

3.6 Protection of panels. When tested as specified in *section 4*, not more than one panel out of five panels shall fail after being covered with a film of lubricating oil for 100 hours. If more than one panel fails, the product shall be retested by repeating the same test with an additional ten panels. Not more than four panels shall fail out of the total 15 panels, (five on an original test plus ten on retest).

3.7 Workmanship. The oil shall be entirely homogeneous and free from lumps of undissolved additive, water, dirt, lint or sediment. Prior to final packaging the oil shall be filtered through a 0.45 micrometer pore-size filter.

4. VERIFICATION

4.1 Classification of inspections. The inspection requirements specified herein are classified as follows:

a. Qualification inspection (see *4.2*).

b. Quality conformance inspection (see *4.3*).

4.2 Qualification inspection. Qualification inspection shall consist of a review for approval of the submitted manufacturers test report and subjecting the qualification samples (see *4.2.1*) to examination and testing for all the requirements of this specification.

4.2.1 Qualification samples. The qualification sample(s) shall consist of 1 gallon finished oil, 1 pint base stock (before the addition of additive agents) and 1 ounce of compounds used for improving the oxidation stability and corrosion protection. In the event that the additives are supplied as concentrated solutions, an equivalent quantity of the solution shall be furnished.

4.2.2 Qualification tests. Qualification sample(s) shall be subjected to all tests specified under *4.4*, method of inspection.

4.2.3 Retention of qualification. In order to retain qualification of a product approved for listing on the QPL, the manufacturer shall verify by certification to the qualifying activity that the manufacturer's product complies with the requirements of this specification. The time of periodic verification by certification shall be in two-year intervals from the date of original qualification. The Government reserves the right to re-examine the qualified product whenever deemed necessary to determine that the product continues to meet any or all of the specification requirements.

4.3 Quality conformance inspection. The quality conformance samples shall be labeled completely with information identifying the purposes of the sample, name of product, specification number, lot and batch number (see *6.8*), date of sampling, and contract number. Quality conformance tests shall be as specified in *table II*.

TABLE II. Quality conformance tests.

Inspection	Paragraph Requirement	Test
Corrosion and oxidation stability	*3.4.1, 3.4.2*	*4.4.2*
Low temperature stability	*3.4.3*	*4.4.2*
Viscosity	*3.3*	*4.4.2*
Pour point	*3.3*	*4.4.2*
Flash point	*3.3*	*4.4.2*
Precipitation number	*3.3*	*4.4.2*
Evaporation	*3.4.4*	*4.4.2*
Examination of filled containers	*5.1*	*4.4.3*
Color	*3.5*	*4.4.2*

4.4 Method of inspection

4.4.1 Inspection. Inspection shall be in accordance with *Method 9601* of *FED-STD-791* and *4.4.3* of this specification.

4.4.2 Protection and corrosion tests. The oil properties shall be determined in accordance with the applicable methods specified in *table III* and *4.4.1* through *4.4.3*. Physical and chemical values specified in *section 3* apply to the arithmetic average of the determinations made on the samples for those values that fall within any stated repeatability or reproducibility limits of the applicable test method.

TABLE III. Test methods for oil properties.

CHARACTERISTIC	ASTM TEST METHODS
Corrosion and oxidation stability	*D4636*[1/]
Pour point	*D 97*
Flash point (open cup method)	*D 92*
Precipitation number	*D 91*
Viscosity (kinematic)	*D 445*
Color	*D 1500*
Evaporation loss of lubricating greases and oils	*D 972*
Acid number	*D 974*

[1/] *Test shall be run for 168 hours at 121°C. Use hexane, heptane, and/or acetone to clean coupons. Use Alternate Procedure 2.*

4.4.3 Examination of filled container. Each sample of the filled unit container and the shipping container shall be examined for evidence of leakage and net content, and examined for construction defects in the container and closure. Any container in the sample that is under the required fill, or has one or more defects shall be rejected. Rejected lots may be resubmitted for acceptance inspection provided that the contractor has removed or repaired all nonconforming containers.

4.4.4 Protection test

4.4.4.1 Preparation of panels. The following procedures shall be conducted:

a. Cut five panels from steel that conforms to *QQ-S-698*.

b. Size the panels and locate the holes as shown in *figure A7* of *ASTM D 1748*. Remove all burrs, sharp edges and corners, including the edges of the holes.

c. Highly polish the panel with No. 3/0 emery paper prior to use. Next wash and clean the panel in a solvent conforming to *P-D-680, type 1*. Then drain thoroughly and agitate in boiling 95-percent methanol.

d. After cleansing, cool the panels in a desiccator. Care must be taken during cleaning and preparation to ensure that the surfaces are not contaminated by fingerprints. Handle the panels only with tongs during the cleaning operation and only with hooks during and after dipping.

4.4.4.2 Procedure. These steps shall be conducted:

a. Dip five panels in a suitable sample of lubricating oil which is maintained at 25°C ±2°C, remove and allow to drain for 2 hours at that temperature from glass, monel or stainless steel supports.

b. At the end of this period, suspend the panels in a humidity cabinet conforming to *ASTM D 1748* for a period of 100 hours, and in such a manner that the drippage from the supports will not fall onto the panels. Maintain the humidity within the cabinet at 100 percent relative humidity and at a dry bulb temperature of 49°C ±2°C for a 100-hour exposure period.

c. Remove the panels from the cabinet, clean them with naphtha and examine them. Panels have failed the protection test if at the end of the test period one of the following conditions exists in the significant areas of the panels as defined by *ASTM D 1748, figure A1.8* considering both sides of the panel:

(1) A corroded area of 2-mm diameter or larger

(2) Two or more spots of between 1 and 2 mm maximum diameter.

If more than one panel in five panels fail the protection test as defined above, a retest will be permitted. Retests shall consist of repeating the protection test using ten additional panels. Reject the lubricating oil if more than four panels fail the test (adding failures of both test and retest).

4.4.5 Stability at low temperature. A 100-ml sample of the oil shall be maintained at or below -54°C for 72 hours in a stoppered flask. At the end of that time there shall be no visual evidence of gelling, separation or crystallization of the oil. Presence of a dense cloud, which does not "settle out" shall not be cause for rejection.

4.4.6 Corrosivity test

4.4.6.1 Preparation of panels (also see *4.4.4.1*).

4.4.6.2 Preparation of steel discs. The following steps shall be performed:

a. Cut three discs .5 inch thick from a 1-inch diameter bar stock that conforms to *ASTM A304-79*, composition *FS E52100*.

b. Heat-treat the discs to a hardness of Rockwell C-62. (Rollers that may be obtained from roller bearings with similar chemical, physical and dimensional properties to the above bar stock after heat treatment, can be substituted for the formation of the discs). In this case, no additional heat treatment is necessary.

c. Now slowly surface grind on one side to a finish of less than 20 micro-inches rms. If coolant is used during grinding, slush the discs in absolute methanol. Next, abrade the discs on the surface-ground side with successive applications of emery polishing paper grades 1/0, 2/0, 3/0, and finally 4/0. Papers incorporating iron oxide as the polishing medium and wet-dry type papers shall not be used.

d. Wipe the discs clean with sterile absorbent gauze and examine under a 10X magnification for any signs of corrosion or other defects. Do not use defective specimens. Store the discs in a desiccator containing silica gel until ready for use.

4.4.6.3 Preparation of brass clips. The following steps shall be performed:

a. Fabricate clips from commercial 0.0225-inch brass sheet conforming to *ASTM B36* spring temper. The size and shape of the clips are illustrated in *figure 1*.

b. Immerse the clips for 20 seconds in the following etching solution:

450 ml water
300 ml conc. sulfuric acid
225 ml conc. nitric acid
8 ml conc. hydrochloric acid

After etching, wash the clips in cold running tap water and then in distilled water. Dry with acetone and store the clips in a desiccator containing silica gel as desiccant until ready for use.

4.4.6.4 Procedure. The following procedures shall be performed:

a. Coat the three discs with the test oil by dipping and stirring the rod in the test oil and allowing the oil from the rod to drop onto the polished side of the discs.

b. Clamp the brass clips over the coated discs and the assemblies and place them in a test chamber, which is maintained at 27°C ±1°C and 50 percent relative humidity, for a period of 10 days. For a 50 percent relative humidity, use a sulfuric acid solution with a density of 1.338 at 20°C.

c. After exposure, remove the assemblies and outline the brass clips on the discs using the clips as templates. Then remove the clips and wipe the test oil from the discs.

d. Examine the discs under 10X magnification for signs of corrosion, pitting or other detrimental effects. If the test results are questionable, repeat the entire test using new specimens, except extend the time period to 20 days. In this case, examine the discs as in the previous manner.

5. PACKAGING

5.1 Packaging For acquisition purposes, the packaging requirements shall be as specified in the contract or order (see *6.2*) When actual packaging is to be performed by DoD personnel, these personnel need to contact the responsible packaging activity to ascertain requisite packaging requirements. Packaging requirements are maintained by the Inventory Control Point's packaging activity with the Military Department or Defense Agency, or within the Military Department's System Command. Packaging data retrieval is available from the managing Military Department's or Defense Agency's automated packaging files, CD-ROM products, or by contacting the responsible packaging activity.

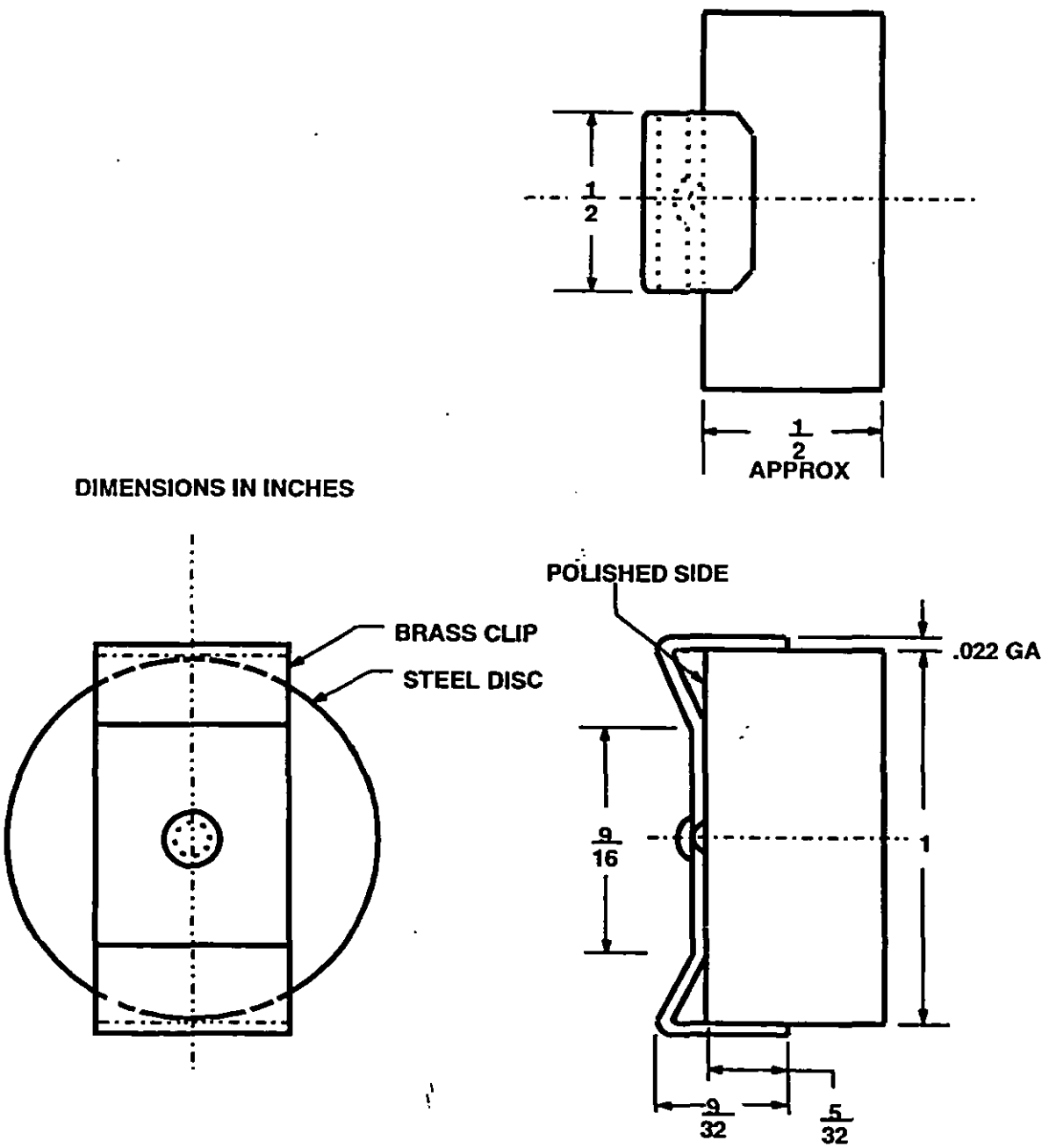

FIGURE 1. Typical test specimens for corrosivity test.

6. NOTES

(This section contains information of a general or explanatory nature that may be helpful, but is not mandatory.)

6.1 Part or identifying number (PIN). The PIN to be used for lubricating oil acquired to this specification is created as follows:

M6085 - X

Container Size
1 = 1.5 oz.
2 = 4 oz.
3 = 8 oz.
4 = 1 quart
5 = 5 gallon

6.2 Intended use. This oil is intended for use in aircraft instruments, electronic equipment or where a low evaporation oil is required for both high and low temperature application, and where oxidation and corrosion resistance is desirable.

6.3 Acquisition requirements. Acquisition documents should specify the following:

a. Title, number and date of this specification.

b. Issue of DoDISS to be cited in the solicitation and, if required, the specific issue of the individual documents referenced (see *2.1* and *2.2*).

c. Type and size of containers (see *5.1*).

d. Quantity.

e. Selection of applicable levels of packaging and packing with requirements in detail (see *5.1*).

6.3.1 Purchase unit. The instrument oil covered by this specification should be purchased by volume.

6.4 Qualification. With respect to products requiring qualification, awards will be made only for such products as have, prior to the time set for opening of bids, been tested and approved for inclusion in the applicable QPL whether or not such products have actually been so listed by that date. The attention of the suppliers is called to this requirement and manufacturers are urged to arrange to have the products they propose to offer to the Federal Government tested for qualification, in order that they may be eligible to be awarded contracts or orders for the products covered by this specification. The activity responsible for the QPL is AFRL/MLSE, Bldg 652, 2179 Twelfth St, Room 122, Wright-Patterson AFB OH 45433-7718. Information pertaining to qualification of products may be obtained from that activity.

6.4.1 Qualification information. It is understood that the material furnished under this specification subsequent to final approval will be of the same composition and will be equal to products upon which approval was originally granted. In the event that the oil furnished under contract is found to deviate from the composition of the approval product, or that the product fails to perform satisfactorily, approval of such products will be subjected to immediate withdrawal from the QPL at the discretion of the approving activity.

6.4.2 Data to accompany qualification samples. The samples will be accompanied by a material safety data sheet and a test report from the manufacturer or a commercial laboratory containing complete information about the source, type of base stock and additive materials used; the formulation and composition of the finished fluid; and laboratory data showing quantitative results of all the tests required by this specification, except storage stability.

Separate qualification inspection will be required for each base stock used. The samples will be plainly identified by securely attached durable tags or labels marked with the following information:

Sample for qualification inspection
LUBRICATING OIL; AIRCRAFT INSTRUMENT, LOW VOLATILITY
Specification *MIL-PRF-6085*
Name of ingredient (for ingredient material)
Name of manufacturer
Product code number
Date of manufacture

6.4.2.1 Formulation sheet example. An example of a satisfactory form for the formulation sheet indicating the weight percentage and nature of each ingredient:

Oil base stock	percentage
Oxidation inhibitor (manufacturer's name and number)	percentage
Corrosion inhibitor (manufacturer's name and number)	percentage

6.5 Disposal actions

6.5.1 Background. Accumulated waste fluid will be disposed of through a waste oil recovery program unless prohibited by local law. Otherwise, the product will be disposed of in accordance to local law and regulations promulgated by the U.S. Environmental Protection Agency under *Public Law 94-580, Resource Conservation and Recovery Act of 1976.*

6.5.2 Handling and safety precautions. Personnel handling the product will wear appropriate impervious clothing to prevent repeated or prolonged skin contact. Local appraisal is required for exact protective clothing. If skin or clothing becomes moistened with the product, personnel will promptly wash with soap or mild detergent and water. respirators are not required unless there is an inhalation exposure to mists. Personnel will wear protective clothing when using the product and when cleaning up spills.

6.5.3 Depot-type operations. Additionally, the used product, which has been drained from the hydraulic systems, will be combined with unused, but contaminated fluid from partially full containers and then recycled.

6.5.4 Container disposal. Tops from one-time use containers will be discarded with ordinary refuse. Containers will be made as empty as possible using gravity draining, after which they are to be crushed and buried in a permitted sanitary landfill or incinerated with general refuse. No special decontamination procedures are required for empty containers or their lids.

6.6 International agreements. Certain provisions of this specification are the subject of international standardization agreements (*ASCC Air Standard 15/1* and *NATO STANAG 1135*). When amendment, revision or cancellation of this specification is proposed that will violate the international agreement concerned, the departmental custodians will inform their respective Departmental Standardization Office (DepSO) so appropriate action may be taken respecting the international agreement concerned.

6.7 Subject term (keyword) listing.

Acid number
Flash point
Pour point
Synthetic lubricant

6.8 Definitions.

6.8.1 Bulk lot. A bulk lot (batch) is an indefinite quantity of a homogeneous material mixture offered for acceptance in a single, isolated container or manufactured in a single-plant run (not exceeding 24 hours) through the same processing equipment, with no change in ingredient material.

6.8.2 Packaged lot. A packaged lot is an indefinite number of unit containers of identical size and type, offered for acceptance and filled with a homogeneous material mixture from one isolated container or filled with a material mixture manufactured in a single-plant run (not exceeding 24 hours) through the same processing equipment, with no change in ingredient material.

6.9 Changes from previous issue. Marginal notations are not used in this revision to identify changes with respect to the previous issue due to the extent of the changes. The changes are due to Acquisition Reform initiatives requiring Government specifications to be performance-based

Custodians:
Army - CR4
Navy - AS
Air Force - 11

Review activities:
Army - MI, SM, AR
Navy - SH, SA OS
Air Force - 68
DLA – GS

Preparing activity:
Air Force - 11

(Project 9150-0822)

International interest:
(See *section 6*)

STANDARDIZATION DOCUMENT IMPROVEMENT PROPOSAL

INSTRUCTIONS

1. The preparing activity must complete blocks 1, 2, 3, and 8. In block 1, both the document number and revision letter should be given.
2. The submitter of this form must complete blocks 4, 5, 6, and 7.
3. The preparing activity must provide a reply within 30 days from receipt of the form.
   NOTE: This form may not be used to request copies f documents, nor to request waivers, or clarification of requirements on current contracts. Comments submitted on this form do not constitute or imply authorization to waiver any portion of the referenced document(s) or to amend contractual requirements.

I RECOMMEND A CHANGE:	1. DOCUMENT NUMBER MIL-PRF-6085D	2. DOCUMENT DATE (YYMMDD) 98/02/20

3. DOCUMENT TITLE
LUBRICATING OIL: INSTRUMENT, AIRCRAFT, LOW VOLATILITY

4. NATURE OF CHANGE (Identify paragraph number and include proposed rewrite, if possible. Attach extra sheets as needed.)

5. REASON FOR RECOMMENDATION

6. SUBMITTER

a. NAME (Last, First, Middle Initial)	b. ORGANIZATION	
c. MAILING ADDRESS (Street, City, State, Zip Code)	d. TELEPHONE (Include Area Code) (1) COMMERCIAL (2) AUTOVON (If applicable)	e. DATE SUBMITTED (YYMMDD)

8. PREPARING ACTIVITY

a. NAME	b. TELEPHONE (Include Area Code)	
ASC/ENSI Air Force Code 11	(1) Commercial (937) 255-0175	(2) AUTOVON 785-0175
c. ADDRESS *(Include Zip Code)* 2530 Loop Road West Wright-Patterson AFB OH 45433-7101	IF YOU DO NOT RECEIVE A REPLY WITHIN 45 DAYS, CONTACT: Defense Quality and Standardization Office 5203 Leesburg Pike, Suite 1403, Falls Church, VA 22041-3466 Telephone (703) 756-2340 AUTOVON 289-2340	