NOT MEASUREMENT SENSITIVE

MIL-HDBK-2361(AC)
20 MAY 1999

DEPARTMENT OF DEFENSE HANDBOOK

DIGITAL PUBLICATIONS DEVELOPMENT IMPLEMENTATION GUIDE

This handbook is for guidance only.
Do not cite this document as a requirement.

AMSC N/A **AREA IPSC**

DISTRIBUTION STATEMENT A. Approved for public release; distribution is unlimited.

FOREWORD

1. This military handbook is approved for use by the Department of the Army and is available for use by all Departments and Agencies of the Department of Defense.
2. This handbook provides guidance on the implementation of Standard Generalized Markup Language (SGML) as it pertains to MIL-STD-2361(SC), Department of Defense, Interface Standard, Army Digital Publications.
3. Beneficial comments (recommendations, additions, deletions) and any pertinent data which may be of use in improving this document should be addressed to: U.S. Army Publishing Agency, (USAPA) ATTN: ASRL Administrator 2461 Eisenhower Avenue, Alexandria, VA 22331–0302 by using the self-addressed Standardization Document Improvement Proposal (DD Form 1426) appearing at the end of this document or by letter.
4. This document supplements Army Departmental Manuals, Directives, and Military Standards, and provides basic and fundamental information on Standard Generalized Markup Language (SGML) as it applies to MIL-STD-2361(SC).
5. The use of Courier font changes in this handbook represent SGML document instance fragments, (i.e., `<!ELEMENT charfill - O EMPTY>`).

CONTENTS

PARAGRAPH		PAGE
1.	**SCOPE**	1
1.1	Introduction	1
1.1.1	Scope	1
1.1.2	Purpose	1
1.1.3	Applicability	1
2.	**APPLICABLE DOCUMENTS**	2
2.1	General	2
2.2	Government documents	2
2.2.1	Specifications, standards, and handbooks	2
2.2.2	Other Government Documents, Drawings and Publications	3
2.3	Non-Government publications	3
2.4	Order of precedence	4
3.	**DEFINITIONS**	5
3.1	Terms and Acronyms	5
3.1.1	Terms	5
3.1.2	Acronyms	8
4.	**STANDARD GENERALIZED MARKUP LANGUAGE (SGML)**	10
4.1	What is SGML	10
4.1.1	SGML requirements	10
4.1.2	Why use SGML	10
4.1.3	The Digital Publications Development (DPD) Program concept	10
4.1.4	SGML Reference	10
4.1.5	MIL-STD-2361(SC) SGML Tags	10
4.1.6	SGML Tutorial	10
4.2	SGML experience and expertise	10
4.2.1	Types of SGML knowledge	11
4.2.1.1	Publications manager	11
4.2.1.2	Publications author	11
4.2.1.3	Computer specialist	11
4.3	SGML overview	11
4.4	SGML composition	11
4.4.1	Document Type Definitions (DTD)	12
4.4.2	Document instances	12
4.4.3	SGML declaration	12
4.4.4	SGML markup	12
4.4.4.1	SGML tags	12
4.4.4.2	Markup minimization	13
4.4.4.3	Elements	13
4.4.4.4	Attributes	14
4.4.4.5	Entities	14
4.4.4.6	Validation of SGML Markup	15
4.4.4.7	Formatting Output Specification Instance (FOSI)	15
5.	**SPECIFIC PUBLICATION IMPLEMENTATION GUIDANCE**	17
5.1	Administrative Publications	17
5.2	Training and Doctrine Publications	17
5.3	Technical and Equipment Publications	17
5.3.1	Information grouping	22
5.3.2	Work package reuse	23
5.3.2.1	Filtering and overlaying work package information	23

5.3.2.2 Work package reuse examples . . . 23
5.3.2.3 Work package initial setup . . . 24
5.3.2.4 Additional guidance for work package reuse . . . 25
5.3.3 General TM Development Process and Flow . . . 25
5.3.4 Traditional Paper TM Development: Process and Flow . . . 26
5.3.5 TM Development with MIL-STD-2361(SC) . . . 27
5.3.5.1 Requirements review . . . 28
5.3.5.2 SGML object and construct review and setup . . . 29
5.3.5.3 Document Type Definition (DTD) as the Outline . . . 29
5.3.5.4 TM Development . . . 30
5.3.5.5 Layout and Style . . . 30
5.3.5.6 Conversion of Legacy Data . . . 30
5.3.6 SGML Process . . . 31
5.3.6.1 Applying the Appropriate DTD . . . 31
5.3.6.2 Creation of Document Instance . . . 32
5.3.6.3 Validation (Parse) of Markup Syntax . . . 32
5.3.6.4 Creation of Required Output . . . 32
5.3.7 Validation and Verification Process . . . 32
5.3.7.1 Validation of an SGML Document . . . 32
5.3.7.2 Parsing MIL-STD-2361(SC) TM DTDs . . . 32
5.3.7.3 Valid SGML Document vs. Conformance to MIL-STD-40051 . . . 33
5.3.7.4 Formal Public Identifiers for Entities . . . 33
5.3.7.5 ID and IDREF Resolved . . . 33
5.3.7.6 IETM - Link Verification . . . 33
5.3.7.7 Published Document Produced by SGML Instance . . . 33
5.3.8 Acquisition guidance . . . 34
5.3.8.1 CDRL . . . 34
5.3.8.2 Statement of Work (SOW) . . . 34
5.3.8.3 Conversion of Legacy Data . . . 34
5.3.8.4 GFI/GFE Source Information . . . 34
5.3.8.5 TM Requirements and Standards . . . 34
5.3.8.6 Location of SGML objects, constructs, and other information (DTDs, FOSIs, SGML tag description lists, documentation etc.) . . . 34
5.3.8.7 Tailoring the Work Packages for each type of TM manual . . . 35
5.3.8.8 Required output medium . . . 35
5.3.8.8.1 Paper . . . 35
5.3.8.8.2 Electronic Technical Manual (ETM) . . . 35
5.3.8.8.3 Interactive Electronic Technical Manual (IETM) . . . 35
5.3.8.9 Delivery medium . . . 35

6. **ARMY SGML REGISTRY AND LIBRARY (ASRL)** . . . 36
6.1 ASRL description . . . 36
6.1.1 ASRL capabilities . . . 36
6.1.2 Standardization and reuse . . . 36
6.1.2.1 Direct reuse . . . 36
6.1.2.2 New SGML object and construct development . . . 36
6.2 ASRL Concept of Operations . . . 36
6.2.1 Purpose of the ASRL . . . 36
6.2.2 Background . . . 37
6.2.3 ASRL organization . . . 37
6.2.4 ASRL Services . . . 37
6.2.5 ASRL Assets . . . 37
6.2.6 Procedures for submitting existing SGML objects and constructs . . . 38
6.2.7 Procedures for submitting new SGML object and construct requirements . 38

6.3 ASRL Operations 39
6.3.1 ASRL Repository Operations 39
6.3.2 Assistance and Problem Reporting 40
6.3.3 Access via the Internet (WWW) 40
6.4 Submittal Package Format Procedures 44
6.4.1 Submission package 44
6.4.2 Submission package contents 44
6.4.2.1 DTD Information 44
6.4.2.2 DTD abstract 45
6.4.2.3 Sample DTD 46
6.4.2.4 DTD certification 46
6.4.2.5 Parse logs 47
6.4.3 Delivery options 48
6.4.3.1 Diskette delivery 48
6.4.3.2 Electronic Mail 49

7. **NOTES** 50
7.1 Intended use 50
7.2 Subject term (key word) listing 50

APPENDIX A **SGML TUTORIAL** 51

APPENDIX B **MIL-STD-2361(SC) SGML APPLICATIONS INTRODUCTION** 59

APPENDIX C **GENERAL INFORMATION WITH THEORY OF OPERATION** 61

APPENDIX D **OPERATORS INSTRUCTION INFORMATION** 87

APPENDIX E **MAINTENANCE INFORMATION** 103

APPENDIX F **TROUBLESHOOTING INFORMATION CHAPTER** 173

APPENDIX G **SUPPORTING INFORMATION** 245

APPENDIX H **PARTS INFORMATION** 313

APPENDIX I **SHIPPING INFORMATION** 321

APPENDIX J **PILOT OPERATING PROCEDURES INFORMATION** 323

APPENDIX K **PRODUCTION** 325

APPENDIX L **SHARED COMMON ELEMENTS** 361

APPENDIX M **INTRODUCTION TO MIL-STD-2361(SC) SGML MARKUP** 437

APPENDIX N **ADMINISTRATIVE PUBLICATIONS APPLICATIONS** 447

APPENDIX O **TRAINING PUBLICATIONS APPLICATIONS** 449

APPENDIX P **FOSI APPLICATION AS A STYLE GUIDE** 451

APPENDIX Q **SGML REFERENCE MATERIAL** 453

INDEX 454

FIGURE PAGE

1 MIL-STD-2361(SC) TM STRUCTURE 17
2 MIL-STD-2361(SC) INFORMATION CHAPTER HIERARCHY 18
3 WORK PACKAGE SAMPLE 19
4 EXAMPLE 1 DIRECT REUSE 23
5 EXAMPLE 2 OVERLAYED REUSE 24
6 TECHNICAL MANUAL DEVELOPMENT CYCLE 26
7 TRADITIONAL PAPER TM DEVELOPMENT PROCESS AND FLOW 27
8 TM DEVELOPMENT WITH MIL-STD-2361(SC) 28
9 SGML SETUP PROCESS 29
10 EXAMPLE OF EMBEDDED TAGS IN MIL-STD-40051 30
11 CONVERSION OF LEGACY DATA 31
12 SGML PROCESS 31
13 ASRL ORGANIZATIONAL STRUCTURE 37
14 ASRL HOME PAGE 41
15 ASRL LIBRARY CARD REQUEST 42
16 SGML CONSTRUCTS 43
17 SAMPLE ABSTRACT 46
18 SAMPLE DTD CERTIFICATION 47
19 SAMPLE PARSE LOG 48
20 SAMPLE SGML CATALOG 56
21 SGML TREE LEGEND 60
22 GENERAL INFORMATION CHAPTER 61
23 STANDARD GENERAL INFORMATION CHAPTER DTD HIERARCHY 63
24 STANDARD GENERAL INFORMATION WORK PACKAGE 64
25 SAMPLE <GINFOWP> FOSI OUTPUT 69
26 EQUIPMENT DESCRIPTION WORK PACKAGE DTD HIERARCHY 76
27 LOCATION AND DESCRIPTION OF MAJOR COMPONENTS 78
28 DIFFERENCES BETWEEN MODELS 79
29 EQUIPMENT CONFIGURATIONS 80
30 THEORY OF OPERATION WORK PACKAGE DTD HIERARCHY 81
31 SYSTEM THEORY DTD HIERARCHY 84
32 SUPPORT DATA WORK PACKAGE DTD HIERARCHY 85

33 OPERATORS INSTRUCTION INFORMATION DTD HIERARCHY 87
34 CONTROLS AND INDICATORS 88
35 OPERATION UNDER USUAL CONDITIONS 91
36 OPERATION UNDER UNUSUAL CONDITIONS 97
37 SPECIAL AND DETAILED PROCEDURES WORK PACKAGE 101
38 MAINTENANCE INFORMATION CHAPTER DTD HIERARCHY 103
39 STANDARD MAINTENANCE INFORMATION CHAPTER DTD HIERARCHY 105
40 SERVICE UPON RECEIPT WORK PACKAGE DTD HIERARCHY 105
41 PERSONAL EQUIPMENT WORK PACKAGE DTD HIERARCHY 114
42 PREVENTIVE MAINTENANCE CHECKS AND SERVICES WORK PACKAGE DTD HIERARCHY 116
43 PMCS TABLE DTD HIERARCHY 118
44 MAINTENANCE WORK PACKAGES DTD HIERARCHY 123
45 SAMPLE <MAINTWP> FOSI OUTPUT 128
46 MAINTENANCE TASKS DTD HIERARCHY 130
47 PHASED MAINTENANCE INSPECTIONS WORK PACKAGE DTD HIERARCHY 147
48 LUBRICATION INSTRUCTIONS WORK PACKAGE DTD HIERARCHY 149
49 MAINTENANCE TEST FLIGHT MAINTENANCE INFORMATION MODULE DTD HIERARCHY 150
50 MAINTENANCE TEST FLIGHT MAINTENANCE PROCEDURES WORK PACKAGE DTD HIERARCHY 151
51 MAINTENANCE TEST FLIGHT CHART WORK PACKAGE DTD HIERARCHY 156
52 AMMUNITION MAINTENANCE INFORMATION MODULE DTD HIERARCHY 157
53 AMMUNITION INFORMATION WORK PACKAGE DTD HIERARCHY 158
54 AUXILIARY EQUIPMENT MAINTENANCE INFORMATION MODULE DTD HIERARCHY . 163
55 AUXILIARY EQUIPMENT WORK PACKAGE DTD HIERARCHY 163
56 PREVENTIVE MAINTENANCE SERVICES MAINTENANCE INFORMATION MODULE %PMSMIM; 165
57 PREVENTIVE MAINTENANCE SERVICE INSPECTION WORK PACKAGE DTD HIERARCHY 165
58 PHASED MAINTENANCE INSPECTION CHECKLIST MAINTENANCE INFORMATION CHAPTER ***%pmicklistmim;*** DTD HIERARCHY 167
59 PHASED MAINTENANCE INSPECTION CHECKLIST WORK PACKAGE <PMI-CKLISTWP> DTD HIERARCHY 168
60 TIM DTD HIERARCHY 173
61 TROUBLESHOOTING INTRODUCTION WORK PACKAGE DTD HIERARCHY 175
62 TROUBLESHOOTING INDEX WORK PACKAGE DTD HIERARCHY 176
63 TROUBLESHOOTING TEST MODULE WORK PACKAGE DTD HIERARCHY 181
64 TEST MODULE DTD HIERARCHY 183
65 SAMPLE <OPCHECK>. 185
66 SAMPLE <MESSAGES> FOR MESSAGE WORD. 188

67 SAMPLE <FAULTREPORTS>. 191
68 TROUBLESHOOTING PROCEDURES WORK PACKAGE DTD HIERARCHY 192
69 ENTRY-POINT DTD HIERARCHY 199
70 SAMPLE <FAULTPATH>. 204
71 SAMPLE <PATHREFTBL>. 209
72 SAMPLE <PASSFAILCK>. 215
73 TECHNICAL INFORMATION AND DESCRIPTION WORK PACKAGE DTD HIERARCHY . 220
74 MAINTENANCE TEST FLIGHT TROUBLESHOOTING GUIDE WORK PACKAGE DTD HIERARCHY 222
75 SUPPORTING INFORMATION CHAPTER DTD HIERARCHY 245
76 STANDARD SUPPORTING INFORMATION CHAPTERS DTD HIERARCHY 247
77 REFERENCES WORK PACKAGE DTD HIERARCHY 248
78 SAMPLE <REFWP> FOSI OUTPUT 253
79 MAINTENANCE ALLOCATION CHART WORK PACKAGE DTD HIERARCHY 255
80 REPAIR PARTS AND SPECIAL TOOLS LIST WORK PACKAGE DTD HIERARCHY . . . 266
81 COMPONENTS OF END ITEM (COEI) AND BASIC ISSUE ITEMS (BII) WORK PACKAGE DTD HIERARCHY 267
82 ADDITIONAL AUTHORIZATION LIST WORK PACKAGE DTD HIERARCHY 272
83 SAMPLE <AALWP> FOSI OUTPUT 278
84 EXPENDABLE AND DURABLE ITEMS LIST WORK PACKAGE DTD HIERARCHY . . . 280
85 STOWAGE AND DECAL/DATA PLATE GUIDE WORK PACKAGE DTD HIERARCHY . . 282
86 ON-VEHICLE EQUIPMENT LOADING PLAN WORK PACKAGE DTD HIERARCHY . . . 283
87 TOOL IDENTIFICATION LIST WORK PACKAGE DTD HIERARCHY 285
88 ILLUSTRATED LIST OF MANUFACTURED ITEMS WORK PACKAGE DTD HIERARCHY . 288
89 TORQUE LIMITS WORK PACKAGE DTD HIERARCHY 290
90 MANDATORY REPLACEMENT PARTS LIST WORK PACKAGE DTD HIERARCHY . . . 291
91 FOREIGN AMMUNITION (NATO) WORK PACKAGE DTD HIERARCHY 293
92 INVENTORY WORK PACKAGE DTD HIERARCHY 294
93 STORAGE OF AIRCRAFT WORK PACKAGE DTD HIERARCHY 296
94 WEIGHT AND BALANCE WORK PACKAGE DTD HIERARCHY 298
95 DEPOT MOBILIZATION REQUIREMENTS WORK PACKAGE DTD HIERARCHY 300
96 COMPONENT CHECKLIST WORK PACKAGE DTD HIERARCHY 302
97 QUALITY ASSURANCE REQUIREMENTS WORK PACKAGE DTD HIERARCHY 305
98 WIRING DIAGRAMS WORK PACKAGE DTD HIERARCHY 308
99 GENERIC APPENDIX WORK PACKAGE DTD HIERARCHY 310
100 PARTS INFORMATION CHAPTER DTD HIERARCHY 313
101 INTRODUCTORY WORK PACKAGE DTD HIERARCHY 315

102 REPAIR PARTS LIST WORK PACKAGE DTD HIERARCHY 316
103 SPECIAL TOOLS LISTS DTD HIERARCHY 317
104 PART NUMBER INDEX DTD HIERARCHY 318
105 REFERENCE DESIGNATOR INDEX DTD HIERARCHY 319
106 PRODUCTION DTD HIERARCHY 325
107 MANUAL DTD HIERARCHY 326
108 FRONT MATTER FOR TECHNICAL EQUIPMENT MANUALS DTD HIERARCHY . . . 327
109 REAR MATTER DTD HIERARCHY 343
110 REPAIR PARTS AND SPECIAL TOOLS LIST FRONT MATTER DTD HIERARCHY . . . 345
111 DTD HIERARCHY FOR VOLUME 346
112 DTD HIERARCHY FOR VOLUME REAR 348
113 AVIATION DTD HIERARCHY 349
114 SUPPLEMENT DTD HIERARCHY 351
115 MODULE DTD HIERARCHY 356
116 DTD HIERARCHY FOR PARAMETER ENTITY %TITLDTEXT; 361
117 DTD HIERARCHY FOR PARAMETER ENTITY %PROCEDURES; 362
118 DTD HIERARCHY FOR PARAMETER ENTITY %CONDITIONS; 365
119 DTD HIERARCHY FOR <TITLEPG> 408

TABLE PAGE

5-1 Initial Setup Guide 24
6-1 ASRL Access 40
6-2 DTD Information 44
6-3 Abstract Contents 45
6-4 File Name Extensions 48
6-5 Part Delimiters 49

THIS PAGE INTENTIONALLY LEFT BLANK.

1. SCOPE

1.1 Introduction.

1.1.1 **Scope.** This handbook provides implementation guidance for the development of Army publications in Standard Generalized Markup Language (SGML), in accordance with MIL-STD-2361(SC), Department of Defense Interface Standard, Army Digital Publications. This handbook also provides implementation guidance for the use of the Army SGML Registry and Library (ASRL) and other SGML implementation tools.

1.1.2 **Purpose.** The purpose of the handbook is to facilitate the work of publications developers and users responsible for creating or using SGML publications in compliance with the requirements of MIL-STD-2361(SC). This handbook is a guide for use by publications developers and users to allow maximum reuse and sharing of common publications source data. Army publications data prepared in accordance with MIL-STD-2361(SC) will facilitate the automated storage, retrieval, interchange, and processing of technical documents from varied data sources.

1.1.3 **Applicability.** This handbook is applicable for use by the Department of the Army (DA) and its contractors, and may be used by other Services and Departments of the Government. It applies to all publications digital data and document development required for compliance with MIL-STD-2361(SC). This handbook will provide knowledge and information about SGML and its application, tutorials in the various ways it may be used, helpful hints and guidance regarding specific SGML idiosyncrasies, and other user assistance type features.

2. APPLICABLE DOCUMENTS

2.1 **General.** The documents listed below are not necessarily all of the documents referenced herein, but are the ones that are needed in order to fully understand the information provided by this handbook.

2.2 **Government documents.**

2.2.1 **Specifications, standards, and handbooks.** The following specifications, standards, and handbooks form a part of this document to the extent specified herein. Unless otherwise specified, the issues of these documents are those listed in the latest issue of the Department of Defense Index of Specifications and Standards (DoDISS) and supplement thereto.

SPECIFICATIONS

DEPARTMENT OF DEFENSE

MIL-PRF-28000 - Digital Representation for Communication of Product Data: IGES Application Subsets and IGES Application Protocols.

MIL-PRF-28001 - Markup Requirements and Generic Style Specification for Electronic Printed Output and Exchange of Text.

MIL-PRF-28002 - Raster Graphics Representation in Binary Format, Requirements for.

MIL-PRF-28003 - Digital Representation for Communication of Illustration Data: CGM Application Profile.

MIL-PRF-87268 - Manuals, Interactive Electronic Technical: General Content, Style, Format, and User-Interaction Requirements.

MIL-PRF-87269 - Database, Revisable: Interactive Electronic Technical Manuals, for the Support of.

STANDARDS

DEPARTMENT OF DEFENSE

MIL-STD-12 - Abbreviations for use on Drawings, and in Specifications, Standards and Technical Documents.

MIL-STD-974 - Contractor Integrated Technical Information Service (CITIS)

MIL-STD-1840 - Automated Interchange of Technical Information

MIL-STD-2361(SC) - Digital Publications Development

MIL-STD-38784 - Standard Practice Technical Manuals: General Style and Format Requirements.

MIL-STD-40051 - Technical Manual Preparation
(Unless otherwise indicated, copies of federal and military specifications, standards, and handbooks are available from the Standardize Documents Order Desk, 700 Robins Avenue, Building 4D, Philadelphia PA 19120-5094.)

HANDBOOKS

DEPARTMENT OF DEFENSE

MIL-HDBK-59B - Continuous Acquisition and Life-Cycle Support (CALS) Implementation Guide

2.2.2 **Other Government Documents, Drawings and Publications.**

REGULATIONS

DoD 5200.1-R - Information Security Program Regulation.
(Unless otherwise indicated, copies of federal and military specifications, standards, and handbooks are available from the Naval Publications and Forms Center, (ATTN: NPODS), 5801 Tabor Avenue, Philadelphia PA 19120-5099.)

DoD 5000.2 - Part 6, Section N, Computer-Aided Acquisition and Logistics Support

(Pentagon personnel may obtain copies of the above DoD Issuances from U. S. Army Publishing Agency, Pubs Counter-Pentagon, Room 1B928, JDHQSV–PAP–LL, 3002 Army Pentagon, Washington, D.C., 20320–3002. All other Army personnel may obtain copies from U.S. Army Publications Distribution Center, ATTN: JDHQSV–PAS, 1655 Woodson Road, St Louis, MO 34113.)

PAMPHLETS

DA Pamphlet 70–3 - Part 6, Section N, Computer-Aided Acquisition and Logistics Support

(Copies of DA Pams, ARs, and other Government Documents required by contractors in connection with specific acquisition functions should be obtained from the contracting activity or as directed by the contracting activity.)

2.3 **Non-Government publications.** The following documents form a part of this document to the extent specified herein. Unless otherwise specified, the issues of the documents which are DoD adopted are those listed in the issue of the DoDISS cited in the solicitation. Unless otherwise specified, the issues of documents not listed in the DoDISS are the issues of the documents cited in the solicitation.

INTERNATIONAL ORGANIZATION FOR STANDARDIZATION

ISO 8879 - ISO 8879 – Information Processing – Text and office systems – Standard Generalized Markup Language (SGML)

(Copies are available from the Standardization Document Order Desk, Building 4D, 700 Robbins Ave, Philadelphia, PA 19111-5094), for issue to DoD activities only. All other requestors must obtain documents from the American National Standards Institute, 11 West 42nd Street, 13 Floor, New York, NY 10036.

The following documents are listed for informational purposes only and do not form a part of this handbook. They may be obtained from their publishers.

a. The SGML Handbook, Charles M. Goldfarb, Oxford University Press, 1990.

b. Practical SGML 2ND Edition, Eric van Herwijnen, Kluwer Academic Publishers, 1994.

c. SGML: An author's guide to the Standard Generalized Markup Language, Martin Bryan, Addison-Wesley, 1988.

d. SGML: The User's Guide to ISO 8879, Joan M. Smith, and Robert Strtely, John Wiley, 1988.

e. SGML and Related Standards Document Descriptions and Processing Languages, Joan M. Smith, Ellis Horwood, 1992.

2.4 **Order of precedence.** In the event of a conflict between the text of this document and the references cited herein, the text of this document takes precedence. Nothing in this document, however, supersedes applicable laws and regulations unless a specific exemption has been obtained.

3. DEFINITIONS

3.1 Terms and Acronyms.

3.1.1 Terms.

Abstract A narrative which describes, defines, or synopsizes a Digital Publications Development SGML asset.

Attribute (of an element) A qualifier indicating a property of an element, other than its type (which is done by a generic identifier) or its content (which is delimited by start-tags and end-tags). Attributes are only found on start-tags, and can indicate reference identifiers, confidentiality, formatting information, and so on.

Attribute A member of an attribute definition list within an attribute list declaration. It declares an attribute name, specifies the form and SGML-specific aspects of possible values, and specifies the action (such as providing a default value) to be taken if an attribute's value is not specified. In the display under attribute (Definition) list declaration, each attribute definition is shown as: name_of_attribute allowable_values default.

Attribute (Specification) List Markup that is a set of one or more attribute specifications, shown as: attribute="value" attribute="value" attribute="value". The markup is used within a Start Tag, as in: <element_name attribute="value" attribute="value" attribute="value">.

Attribute List Declaration A markup declaration that associates an attribute definition list with one or more element types, shown as: <!ATTLIST name_of_associated_element(s) name_of_attribute allowable_values default>.

Constructs Document type definitions (DTDs), formatting output specification instances (FOSIs), and SGML tag narrative definitions.

Declaration The SGML declaration defines which characters are used in a document instance, which syntax the DTD is written in, and which SGML features are used. It should accompany each SGML document, although a default to the one described in the standard may be assumed.

Document Instance The instance is the actual document text and its accompanying SGML tags conforming to the specifications and restrictions set forth in the DTD.

Document Type Declaration A markup declaration that contains the formal specifications of a document type definition, shown as: <!DOCTYPE document_type_name optional_external_identifier [optional_document_type_declaration_subset]>. The declaration invokes a DTD in an SGML document. The document instance of an SGML document must always be preceded by a document type declaration.

Document Type Definition (DTD) A DTD, or Document Type Definition, is an SGML construct used to rigorously and unambiguously describe the structure and content of classes of documents in terms of SGML instances (elements, attributes, entities, etc.). NOTE: '' 'DTDs' occasionally-but not in compliance with ISO 8879 terminology- used as an abbreviation for 'document type declaration'; it is also an SGML reserved word used in formal public identifiers to indicate that the identified entity is a document type declaration set, and is often used to identify such a set. ''

DTD See Document Type Definition

Element A component of the hierarchical structure defined by a document type declaration or DTD. It is identified in a document instance by descriptive markup, usually

a start-tag and end-tag, shown as: <element_type_name attribute= ''value '' attribute= ''value ''>content of the element</element_type_name>.

Element Type Declaration A markup declaration that contains the formal specification of the part of the definition of an element type that deals with the content and markup minimization, shown as: <!ELEMENT element_type_name start_tag_minimization end_tag_minimization content_model_group_or_declared_content content_exceptions>

Entity A unit of information that may be referred to by a symbol in a DTD or in a document instance. Entities may be used for character strings, characters that cannot be keyed in on a keyboard, or for separate files that may or may not contain SGML data.

Entity Reference A reference that is replaced by an entity, shown as: &entity_name; or %entity_name; the ampersand is used for general entities (referenced in the document instance); the percent sign is used for parameter entities (typically referenced in the document type declaration).

Formatting Output Specification Instance (FOSI) An instance of the Output Specification (OS) that assigns values to the style characteristics for a particular document type declaration. The FOSI uses the syntax of an SGML document instance and is designed to format documents for paper delivery.

ISO 8879 Information Processing Text and Office Systems - Standard Generalized Markup Language (SGML) completely specifies the SGML Meta-language with regard to the grammar and syntax required for the SGML language along with the features that may be optionally enabled for a given SGML application. In addition, ISO 8879 also specifies various procedures for processing SGML notation.

Markup To add text to data of a document to convey information about the document.

Output Specification An OS, or Output Specification, provides a rigorously defined set of options for the style characteristics which provide the formatting intent for interchanged SGML-tagged technical publications. The OS has a mechanism for binding the style characteristics to SGML elements and attributes in a document's DTD. The OS is in the form of an SGML DTD. At present, the OS is intended for hard copy composition but can be applied to digital display in limited applications (e.g., non-interactive).

Page Fidelity The ability to preserve the exact presentation characteristics in addition to the same information on pages exchanged between systems or revisions.

Page Integrity The ability to preserve the exact same information on each page in a manual as it is exchanged between systems or revisions. This does not mean that the information will be presented exactly the same way, but only that it appear between the same page boundaries.

Parsing An SGML parser is a computer application that breaks down an SGML-coded document into a series of logical elements and checks that these elements conform to the model defined in the associated document type declaration. When parsing a document, the SGML parser:

- Checks each new character to see if it is part of a general delimiter string that identifies the start of a piece of markup.
- Checks whether or not the character is a short reference delimiter that needs to be expanded.
- Checks if the character is a separator character that should be ignored.

- Identifies the various markup tags, identifying any entities that need to be expanded or recalled from external sources.
- Checks if identified markup tags are valid according to the declared model.

Preparing Activity The DoD activity or the Civilian Agency responsible for the preparation, coordination, issuance, and maintenance of standardization documents.

Reuse The use of authored publication information or publications source data in more than one type of publication product. For example, information authored initially for a TM (e.g., a maintenance work package, task, etc.) that is used verbatim, or in part, for inclusion in a training or doctrine product (e.g., Soldier's Manual, Field Manual, etc.). The intent of reuse may also be fulfilled when the information is reused in a different TM (e.g., for a different level of maintenance, different version of an equipment/weapon system, or a different equipment/weapon system altogether).

Standard Generalized Markup Language Standard Generalized Markup Language, as detailed in ISO 8879 and FIPS Pub 152. SGML is a meta-language that provides a coherent and unambiguous syntax for describing the logical structure of publications in unambiguous grammar. Formalizes the markup process and frees it of system and processing dependencies.

SGML See Standard Generalized Markup Language.

SGML Declaration An SGML Declaration is an SGML construct which specifies an SGML implementation in terms of the values of the SGML parameters, character set, concrete syntax, optional features, and capacity requirements and the SGML features used.

SGML Entity An entity whose characters are interpreted as markup or data in accordance with (IAW) ISO 8879.

SGML Instance An SGML Instance or SGML-tagged document is the collection of data composing a specific document that includes SGML tags (SGML markup) corresponding to elements, their attributes, entity references, etc. The SGML markup conforms to the document's DTD.

SGML Parser An SGML parser is a computer program or a specialized code compiler called a "parser". An SGML parser first processes (or "parses") an SGML Declaration defining the particular SGML implementation and stores this SGML environment. Then the SGML parser can be used to process (or "parse") a DTD to determine its conformance regarding grammar and syntax to ISO 8879 and the SGML Declaration for that SGML application. The SGML parser can then be used to process an instance of a particular document to determine the conformance of the instance to both SGML grammar and syntax and the DTD.

Tag or Tagging Adding tags (descriptive markups) to document data.

Task A sequence of user actions with a definite beginning and an end. User tasks relate to installation checkout operation, and maintenance of systems or equipment. Tasks may contain procedures and in turn steps to complete the assigned task.

Technical Publication Verification This term refers to the parsing of the digital data stream containing a publication to assure compliance with the standard (SGML, CClTT, CGM, IGES) to which it was written. There is no intent in this term to imply the validation/verification process used to certify the content of the publication.

Work Package	Presentation of information functionally divided into individual task packages in the logical order of work sequence. The work packages will be stand alone general information, operating, maintenance, troubleshooting, parts, and supporting information units containing all information required for directing task performance. Work packages may be given to a soldier(s) so they may have complete instructions for accomplishing a task.

3.1.2 **Acronyms.**

ASCII	American Standard Code for Information Interchange
ASRL	Army SGML Registry and Library
BBS	Bulletin Board System
CALS	Continuous Acquisition and Life-Cycle Support
CCITT	Consultative Committee for International Telephone & Telegraph
CFS	Center for Standards
CGM	Computer Graphics Metafile
CITIS	Contractor Integrated Technical Information Service
CSL	CALS SGML Library
CSR	CALS SGML Registry
DCA	Document Class Authority
DDRS	Defense Data Repository System
DEP	Delayed Entry Program
DISA	Defense Information Systems Agency
DoD	Department of Defense
DoDISS	Department of Defense Index of Specifications and Standards
DPD	Digital Publications Development
DSSSL	Document Style Semantics and Specification Language
DTD	Document Type Definition
DCA	Document Class Authority
DPD	Digital Publications Development
e-i-c	Element in Context
ETM	Electronic Technical Manual
FDEP	Flight Data Entry Printout
FPI	Functional Process Improvement
FOSI	Formatting Output Specification Instance
FPSI	Formatting Presentation Specification Instance
FPI	Formal Public Identifier
GFI	Government Furnished Information
IAW	In Accordance With
IETM	Interactive Electronic Technical Manual
IGES	Initial Graphics Exchange Specification
ISO	International Organization for Standardization
IPSC	Information Processing Standards for Computers
OS	Output Specification

LSA	Lead Standardization Activity
PA	Preparing Activity
PDEP	Preliminary Draft Equipment Publication
PDL	Page Description Language
PS	Presentation Specification
PSI	Presentation Specification Instance
RFP	Request For Proposal
SGML	Standardized Generalized Markup Language
SMA	Standardized Management Activity
SME	Subject Matter Expert
STARS	Software Technology for Adaptable, Reliable Systems
USAPA	US Army Publishing Agency
WYSIWYG	What You See Is What You Get
TM	Technical Manual
TMDE	Test Measurement & Diagnostic Equipment
TRADOC	US Army Training and Doctrine Command
WWW	World Wide Web
URL	Uniform Resource Locator

4. STANDARD GENERALIZED MARKUP LANGUAGE (SGML)

4.1 **What is SGML.** Standard Generalized Markup Language (SGML) is a standard approach for applying markup to the content of documents. It is an international, platform-neutral standard for creating and using documents and information across multiple software applications and computer platforms. SGML establishes a consistent language and terminology which provides publications developer and user activities the capability to share and reuse publication information, and to preserve the organization and content of documents. The application of SGML in accordance with MIL-STD-2361(SC)and this handbook is fully compliant with the international, federal, and CALS standards for SGML used throughout the Government and industry (see Section 2., Applicable Documents). Refer to the SGML Tutorial in Appendix A for additional information regarding SGML.

4.1.1 **SGML requirements.** MIL-STD-2361(SC) establishes SGML requirements which reflect the functional requirements associated with the different types of Army publications. For example, the SGML requirements contained in the technical manual (TM) segment of MIL-STD-2361(SC) reflect the functional requirements contained in MIL-STD-40051, Technical Manual Preparation. SGML provides capabilities for developers and users of publication information to output the information on a variety of media (e.g., paper, CD-ROM, WWW, etc.).

4.1.2 **Why use SGML.** SGML allows developers to update and maintain critical source information over the life-cycle of weapon systems and other equipment. SGML provides a means for the reuse and exchange of information among its developers and users. SGML is an industry standard for sharing document-based information among applications and is compliant with open systems environments.

4.1.3 **The Digital Publications Development (DPD) Program concept.** SGML, as applied to the DPD Program concept and implemented by MIL-STD-2361(SC), provides the following:

a. Description of the logical structure of documents in unambiguous syntax.

b. Assurance of automated quality control over adherence to that structure.

c. Delivery and storage of publication text in an easily maintained and updatable form.

d. Vendor, software, and platform independence.

4.1.4 **SGML Reference.** SGML reference information can be found in Appendix Q of this handbook.

4.1.5 **MIL-STD-2361(SC) SGML Tags.** The MIL-STD-2361(SC)DTDs contain two specific types of SGML tags: structural and content tags. Structural tags identify data by its place in the hierarchy of the document and by how the material is formatted on the page (i.e., primary paragraph, subparagraph, list, or table). Content tags identify material by its functional use or the type of data (i.e., maintenance task, circuit alignment, controls and indicators, or components of end item table).

4.1.6 **SGML Tutorial.** A tutorial for MIL-STD-2361(SC)SGML application and use is contained in Appendix A of this handbook. The tutorial appendix in this version of the handbook is intended to provide an overview of the use of SGML.

4.2 **SGML experience and expertise.** There are varying degrees of SGML experience and expertise required for different functions. For example, a publications author and his manager need not necessarily have the same SGML background. This portion of the handbook will address the levels and types of SGML experience and expertise that may be needed for different implementing considerations. The considerations offered below are applicable to both Government and private industry publications developers, authors, and other functions involved with the development and acquisition of publications and publication services.

4.2.1 **Types of SGML knowledge.** This paragraph addresses the types of SGML knowledge that will be required by personnel at different functional levels. The functional personnel levels and types addressed below have been the primary players in the MIL-STD-2361(SC) operational testing conducted to date. This type of information will be expanded in later revisions of the handbook, as the operational test results become more definitive.

4.2.1.1 **Publications manager.** A publications manager needs a good overall understanding of SGML. The managers experience and depth of SGML knowledge may not be as great as the publication authors or computer specialists, but it should be sufficient to evaluate their technical input and make informed decisions. These decisions may involve the evaluation and selection of an SGML authoring/composition system for the organization, or contracting work to an SGML conversion contractor, a publications developer, or SGML consultant. SGML knowledge provides the manager with tools for evaluation of technical SGML input, whether it comes from within his own organization or some other source.

4.2.1.2 **Publications author.** The publications author will be the primary user of SGML. The author will be authoring new material, developing publication revisions, and working with legacy data converted (or scheduled for conversion) to SGML. The author will require the ability to read, understand, and work with SGML concepts, rules, Document Type Definitions (DTDs), and Formatting Output Specification Instances (FOSIs). See paragraphs 4.4.1 and 4.4.4.7 for information on DTDs and FOSIs.

4.2.1.3 **Computer specialist.** The computer specialist (including programmers and System Manager) will be the key technical person(s) for accomplishing the detailed technical requirements associated with computer equipment used to develop SGML publications (e.g., the author/editor, composition system, database, etc.). The computer specialist SGML knowledge should be sufficient to allow interpretation of DTDs in order to develop composition scripts, conversion rules, and database management requirements.

4.3 **SGML overview.**

4.3.1 SGML is a markup language that has been standardized by the International Organization for Standards (ISO). Its syntax and semantics are specified in ISO 8879, Standard Generalized Markup Language. MIL-STD-2361(SC)application of SGML is fully compliant with ISO 8879 and enhances the utility of the international standard through the use of functionally grouped, content-tagged publication information. The fact that the markup used in SGML is standardized facilitates the exchange of tagged documents between software applications. SGML markup is commonly spoken of as tagging, because tags are inserted into the text.

4.3.2 SGML is not a processing language; nor does it perform a series of actions in the way that a computer program, written in a language like C, does. Instead it supplies a structured, tagged text database upon which a software application can act. It is like having the record definition of a traditional database without the ability to sort and retrieve. Sorting and retrieving in SGML are accomplished by software that “speaks” SGML and can respond to Document Type Definitions (DTD).

4.3.3 Understanding SGML as a text database reinforces its separation of content markup and specific presentation instructions. SGML is ideally suited to multiple presentation formats and media platforms. SGML aims to encourage descriptive markup rather than process-oriented markup. For instance, MIL-STD-2361(SC) uses the tag <remove> rather than a code that describes the format of this subhead; the fact that the tag will be presented as 10 point, boldface Helvetica is inferred rather than expressed directly (in MIL-STD-2361(SC) the FOSI provides this information).

4.4 **SGML composition.** SGML is used to define the structure and contents of a set (or class) of documents, whether those documents consist of one page or a thousand pages. This definition is accomplished and portrayed through the utility in the different parts that comprise MIL-STD-2361(SC) SGML.

4.4.1 **Document Type Definitions (DTD).** The primary functional unit for SGML is the DTD. MIL-STD-2361(SC) DTDs form a generalized picture of the types of data found over a whole range of publications, rather than descriptions of the specific contents in any one publication.

a. The DTD declares which elements make up the document, the possible sequences in which they will be found, the number of occurrences in that sequence, and what lower-level elements each element may contain. In turn, lower-level elements are described in those same terms. In general, text characters form the lowest-level content of a document.

b. The DTD describes the hierarchical relationships of the elements. For instance, the maintenance information chapter in MIL-STD-2361(SC) module contains several possible types of work packages; one type of work package, the maintenance work package, contains maintenance tasks that consist of procedures made up of steps, and so on.

c. An element can occur at different levels of the hierarchy or in different branches of the hierarchy. For example, lists can occur in Stepl, Step2, or Step3 (different levels of a single branch); and in paragraphs and warnings (different branches).

4.4.2 **Document instances.** What we commonly think of as documents, actual pages of text and graphics, are known as document instances. In the context of a TM developed in SGML in accordance with MIL-STD-2361(SC), a document instance is any part of a content volume(s) with a complete structure as dictated by the relevant DTD. For instance, the minimum structure of an information chapter must include at least one work package and any mandatory lower-level markup. The “document” described in a DTD is a generalized, virtual template. In simplified terms, a document instance consists of:

a. Text marked up with SGML tags.

b. Illustrations incorporated by tagged references to graphic files.

c. Every document instance must either incorporate or reference its governing DTD.

d. If the document instance uses external file or text entities not defined in the DTD, those entities must be declared in the document instance.

4.4.3 **SGML declaration.** Every document and DTD is accompanied by an opening SGML declaration. This file defines the markup character set and the SGML characteristics of the DTD. The SGML declaration includes the characters used as syntactical markers, the maximum length of element and attribute names, special SGML features used, and types of markup minimization. The syntactical markers defined in ISO 8879 itself are known as the reference concrete syntax, and this syntax is used in MIL-STD-2361(SC). Each DTD in MIL-STD-2361(SC) uses the defined SGML declaration in MIL-STD-2361(SC) .

4.4.4 **SGML markup.** SGML markup includes element tag names, element attributes, and reference entities. These markup categories each have a standardized syntax defined in the ISO 8879 standard. The MIL-STD-2361(SC) DTDs use this standard syntax.

4.4.4.1 **SGML tags.** Tags contain two parts: start-tags and end-tags. Where the end tag should occur is guided by the DTD hierarchy. It cannot be inserted until all required content of an element has been included. For instance, the end tag of a maintenance task in a work package cannot occur until at least one procedure has been inserted, insuring that a maintenance task has associated text.
EXAMPLE:

- DTD fragment:

```
<!ELEMENT crewmember - - (#PCDATA)>
```

- Document instance fragment:

```
<crewmember>Gunner<crewmember>
```

Order	Part	Description
1	<	Start Tag Open Delimiter
	</	End Tag Open Delimiter
2	crewmember	Generic Identifier
3	>	Tag Close Delimiter

4.4.4.2 **Markup minimization.** ISO 8879 includes several methods to minimize the amount of markup in a document instance. The MIL-STD-2361(SC) DTDs use the feature omit tag, which allows the writer to omit the start-tag or end-tag as specified in the DTD element declaration. Only end tags are omitted in MIL-STD-2361(SC), but the writer should consult the DTD to distinguish which end tags are required and which can be omitted. In general, end tags are dropped only when the beginning of the next element unambiguously signals that the prior element is closed. Even if the end tag is specified, the writer may insert the end tag. For example, the end tag of a procedure can be omitted since another procedure is at the same hierarchical level and none of a procedure's contents occurs at a higher level than a procedure.

```
<!ELEMENT proc - o (title?,warning?,caution?,note?,para?,stepl+)>
```

NOTE

SGML editors will automatically insert end tags even if the DTD specifies optional end tag, except for the special case EMPTY.

4.4.4.3 **Elements.** Elements are distinct categories of content, such as "work package," "procedure," "stepl," "table," and "tools."

a. Elements range from the largest divisions of the document down to single words if they are significant data. An important criteria for creating an element is its usefulness for applications such as database retrieval and page composition. An element can contain other elements, such as a warning summary that contains general paragraphs, warnings, hazard symbols, etc. Elements in running text, such as "part number," often contain only character data, which, in the DTD, is identified as "#PCDATA," parsable character data. Elements are identified by an element name. When that name occurs in text, surrounded by characteristic syntactical markers, it is called a tag.

b. In the DTD, an element declaration includes an element name, markup minimization rules, the contents of the element, and any attributes of the element. The contents portion of the declaration is often called a "content model," which refers to the generalized nature of this representation of all possible contents and sequencing. The content model is surrounded by parenthesis.

```
<!ELEMENT surwp -- (wpsum,wpinfo, geninfo?,warning?, caution?,note? surtsk+)>
```

c. The MIL–STD–2361(SC) elements identify generic contents rather than precise, literal contents. For instance, <remove> identifies "a removal task" rather than "removal of the Abrams M-1

rear exhaust components." On the other hand, MIL–STD–2361(SC) uses <remove> rather than <para0>, a structural text object from the base tag set in MIL–PRF–28001. In the base MIL–PRF–28001 DTD, <para0> could be used indiscriminately for removal, assembly, inspection, install, repair-replace, and all other types of maintenance tasks. This specific content orientation of MIL-STD-2361(SC) provides level of granularity essential to full source data sharing and reuse.

4.4.4.4 **Attributes.** Elements can be qualified by adding attributes. Attributes are part of the element declaration in the MIL-STD-2361(SC)DTD and address such aspects of the data as security classifications, maintenance levels, reference IDs, and column widths of tables. An attribute has a name and an expected data type specified in the DTD and also has its status as required entry, implied value, or defaulted value defined. ISO 8879 defines several data types, depending on whether the value consists of numbers only, numbers and alpha characters, reference SGML elements, cross-references, or an unlimited text string. Rather than a data type, the DTD can also declare a discrete list of legal values, or it can use a Boolean true-false test (any value other than "0" represents true).

```
<!ATTLIST pmcstable
             tabstyle    NMTOKEN           #IMPLIED
             tocentry    %yesorno;         "l"
             shortentry  %yesorno;         #IMPLIED
             frame       (top | bottom |
                          topbot | all |
                          sides | none)     #IMPLIED
              colsep     %yesorno;          #IMPLIED
              rowsep     %yesorno;          #IMPLIED
              orient     (port | land)      #IMPLIED
              %refs;
              %secur;>
```

4.4.4.5 **Entities.** SGML allows the user to store text as entities that can then be referenced in the document instance by their entity names. Entities content may be any length (up to 300,000 characters). In MIL-STD-2361(SC), for example, the entire boilerplate explanation of the maintenance allocation chart is declared as an entity and can be included in the work package by a single entity reference. Entities are also often used to reference external files, such as graphics. Indeed, users working with MIL-STD-2361(SC) documents, although they do not need to be able to write DTDs, do need to learn the syntax for declaring entities in order to include specific illustrations within the document instance. The DTDs in MIL-STD-2361(SC) also include entity declarations of standard ISO 8879 character sets. A non-keyboard character, such as "plus-or-minus" or "ohm," should be inserted into the document instance through one of the entity references in these ISO character sets.

a. Text entity example:

1. In the DTD:

```
<!ENTITY chkeqp "<para>Inspect the equipment for damage incurred during
shipment. If the equipment has been damaged, report the damage on
SF 361, Transportation Discrepancy Report.<para><para>Check the
equipment against the packing slip to see if the shipment is complete.
<para><para>Report all discrepancies in accordance with applicable
service instructions (e.g., for Army instructions, see DA PAM 738-750).
```

```
<para><para>Check to see whether the equipment has been modified.
<para>">
```

2. Referenced in the instance:

```
&chkeqp;
```

b. Non-keyboard character entity reference:

1. In the DTD:

```
<!ENTITY plusmn SDATA "[plusmn]"--/pm B: =plus-or-minus sign-->
```

2. Reference in the instance:

```
&plusmn;
```

4.4.4.6 **Validation of SGML Markup.** A distinctive characteristic of SGML is the parsing process, which allows the DTD structure and the document instance markup to be tested. Unlike most proprietary markup languages, SGML is self-validating through the medium of the SGML parser. Refer to paragraph 5.3.7.2 for additional information on SGML parsing.

a. In order to proof document instance markup, the DTD must be parsed first. Parsing creates a file that encodes the sequence, number, content model, and required tagging rules of the DTD. In short, the full structure of the DTD. Errors in the DTD are identified during this parsing process to ensure the DTD conforms to the ISO 8879 standards.

b. The encoded file is used thereafter whenever a document instance governed by that DTD is parsed. Parsing a document instance checks that all conditions of the DTD have been met, as well as the general rules of SGML. The parsing process guarantees that any SGML application software receives files with the expected structure, since the operation of SGML software is built on the tags context within the document.

4.4.4.7 **Formatting Output Specification Instance (FOSI).** In MIL-STD-2361(SC), a FOSI is written for each DTD. FOSIs follow the OS DTD included in Appendix B of MIL–STD–28001B Amendment 1.

a. A FOSI creates a map of format characteristics and actions that relate to the elements in the document instance. Actions are such things as storing instance data, inserting stored strings and counter values, and building index entries.

Example:

```
<!-- This begins the DOCUMENT DESCRIPTION which is
     considered to be the default environment -->
<docdesc>
<charlist>
<font inherit="O" style="serif" size="lO" posture="upright"
   weight="medium" width="regular" smallcap="O" offset="O">
<leading lead="12">
<hyphen hyph="1" zone="O">
<wordsp minimum="0.25em" nominal="0.35em" maximum="0.75em">
<lettersp minimum="0.Oem" nominal="O.Oem" maximum="0.025em"
```

```
   kerntype="none" kernpair="null">
<indent leftind="O" rightind="O" firstln="O">
<quadding quad="left" lastquad="lleft">
<highlt reverse="O"  scoring="O" scorewt="0.5pt" scoreoff="2.5pt"
   scorechr=""  bckclr="bwhite" fontclr="black" bckpct="O"
   forpct="lOO"  allcap="O">
<charlist>
<docdesc>
```

b. Each element described in the FOSI is qualified by its document context, attributes, and order of occurrence in a sequence of identical tags. The software application then can apply the format characteristics and perform any actions specified in the FOSI whenever it finds a matching qualified element in the text stream of the document instance.

Example:

```
<e-i-c gi="tow">
<charlist>
<puttext literal="TOWING" placemnt="before">
<subchars>
<font inherit="1" weight="bold">
<highlt allcap="1"> <presp minimum="6pt" nominal="12pt" maximum="30pt">
<postsp minimum="4pt" nominal="6pt" maximum="12pt"> <keeps next="1">
<textbrk startln="1" endln="l">
<subchars>
<puttext>
<charlist>
<e-i-c>
```

c. A FOSI takes advantage of the hierarchical structure of the DTD to apply different formats to a single element in different contexts. Therefore, a list in a table can look different than a list in a paragraph and so on. The FOSI can specify that actions such as adding rules or text take place at the start or end of an element. The hierarchical nature of a DTD means that the children of an element occur before the action is taken. For instance, if the FOSI specifies a rule to be inserted at the end of the work package information (<wpinfo>); the children of the tools list, references, personnel required, etc., will all appear on the page above that end rule.

d. Specific attribute values can also affect the look or use of an element's data or cause different text to be generated. For instance, the value of the "level" attribute on the tag <maintlvl> generates text in the work package information indicating the maintenance level.

5. SPECIFIC PUBLICATION IMPLEMENTATION GUIDANCE

5.1 **Administrative Publications.** The Army currently uses SGML objects and constructs for administrative publications development. Future revisions of this handbook will cover requirements unique to administrative publications.

5.2 **Training and Doctrine Publications.** Training and doctrine publications for SGML objects and constructs are currently under development. Future revisions of this handbook will cover requirements unique to training and doctrine publications information.

5.3 **Technical and Equipment Publications.** Technical Manuals (TM) developed in accordance with MIL-STD-2361(SC) and MIL-STD-40051 will consist of volumes (if required by number of pages), information chapters, and work packages (WP) as indicated in Figure 1.

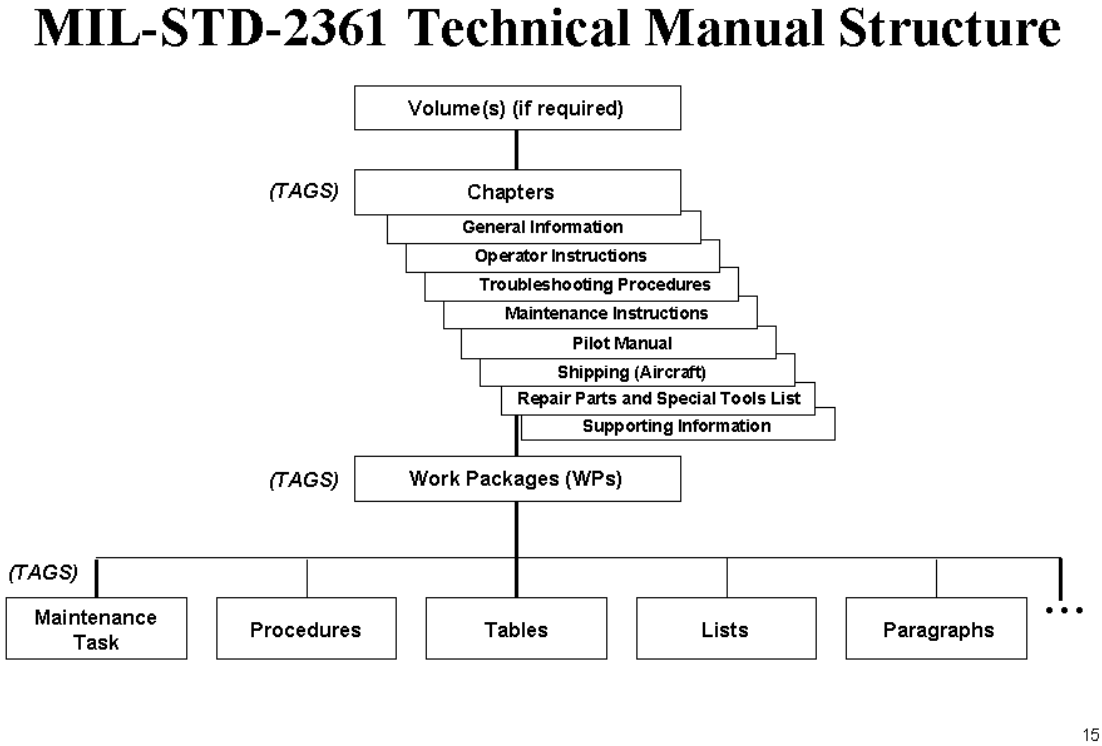

Figure 1 MIL-STD-2361(SC) TM Structure

a. Information chapter. An information chapter consists of specific functional matter required by MIL-STD-40051, such as introductory information with theory of operations or maintenance instructions. Each information chapter is made up of one or more work packages. Examples of Maintenance Information Chapters (MIM) include end items (e.g., M16A1 Rifle, M109A1 Truck, or Aircraft) or system components (e.g., engine, gun carriage, landing gear, etc.). Other information chapters provide General Information (GIM), Troubleshooting Information (TIM), Operator Information (OPIM), Supporting Information (SIM) and parts or RPSTL information (PIM).

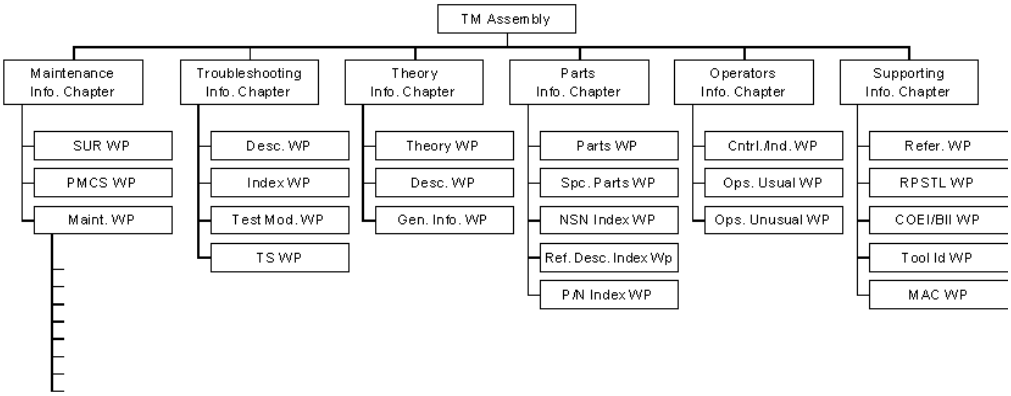

Figure 2 MIL-STD-2361(SC) Information Chapter Hierarchy

b. Work Package. A work package (WP) consists of all data required to perform a specific function, such as service upon receipt, Preventative Maintenance Checks and Services (PMCS), or individual maintenance tasks. This structuring allows electronic access to specific pieces of information required by a technician to perform a specified task. Each work package is assigned a unique identification number (see MIL-STD-40051) for configuration control and reuse of the information contained in the WP. This number does not change over the life of the work package. SGML content tags allow access and use of the same work package for other weapons systems where the same function is performed. Work packages can be printed out, viewed on a computer screen, or otherwise outputted as individual documents and used separately. See Figure 3 for an example of a work package.

TM 9-2350-294-10-1

GENERAL INFORMATION 0006 00

SCOPE

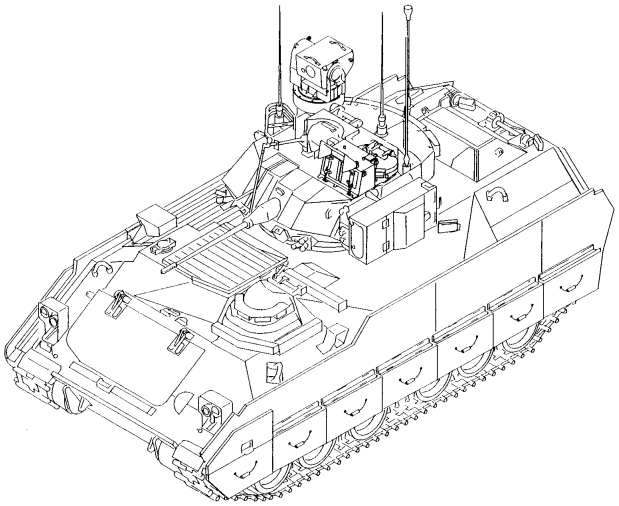

Left Front View

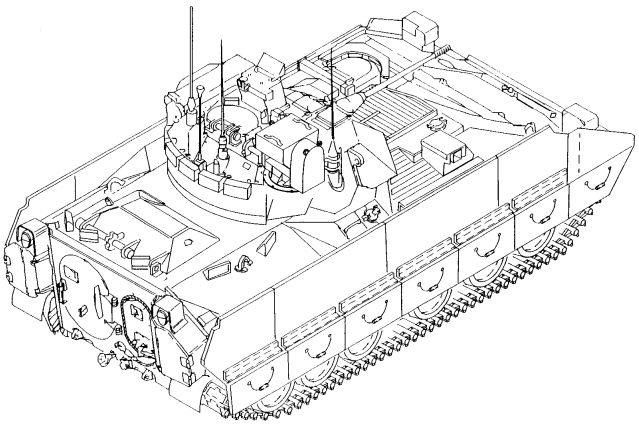

Right Rear View

This manual tells how to operate and maintain the hulls of the M2A3 and M3A3. TM 9-2350-294-10-2 tells how to operate and maintain the turret.

MAINTENANCE FORMS, RECORDS, AND REPORTS

Department of the Army forms and procedures used for equipment maintenance will be those prescribed by DA PAM 738-750, The Army Maintenance Management System (TAMMS).

REPORTING EQUIPMENT IMPROVEMENT RECOMMENDATIONS (EIR)

If your vehicle needs improvement, let us know. Send us an EIR. You, the user, are the only one who can tell us what you don't like about your equipment. Let us know why you don't like the design. Tell us why a procedure is hard to perform. Put

Figure 3 Work Package Sample

c. The following is an example of a tagged instance for a General Information Work Package:

```
<ginfowp wpno="G00001-9-2350-294" summary-detail="0">
<title><text>GENERAL INFORMATION</text></title>
<scope>
<para>
<figure>
<title><text>Left Front View</text></title>
<graphic boardno="ev0038"></figure>
<figure>
<title><text>Right Rear View</text></title>
<graphic boardno="ev0052"></figure>
</para>
<para>This manual tells how to operate and maintain the hulls of the
M2A3 and M3A3.  TM 9-2350-294-10-2 tells how to operate and maintain
the turret.
</para>
</scope>
<mfrr>
<para>Department of the Army forms and procedures used for equipment
maintenance will be those prescribed by<extref docno=" DA PAM 738-750">,
The Army Maintenance Management System (TAMMS).</para></mfrr>
<eir>
<para>If your vehicle needs improvement, let us know.  Send us an EIR.
You, the user, are the only one who can tell us what you don't like
about your equipment.  Let us know why you don't like the design.
Tell us why a procedure is hard to perform.  Put you ideas on an SF 368
(Quality Deficiency Report).  Mail it to us at:  Commander, US Army
Tank-Automotive Command, ATTN: AMSTA-QRT, Warren, MI 48397-5000.</
para></eir>
<handreceipt>
<para>Hand receipts for Components Of End Item (COEI), Basic Issue
Items (BII), and Additional Authorization List (AAL) items are in
<extref docno="TM 9-2350-294-10-HR"> This manual is to aid in property
accountability and is available through:  Director, USAPA,
Distribution Operations Facility, JDHQSV-PAS, 1655 Woodson Avenue, St.
Louis, MO, 63114-6181.  </para></handreceipt>
<destructmat>
<para>The following manuals tell you how and when to destroy Army
materiel to prevent enemy use:
<randlist>
<item><extref docno="TM 750-244-2"></item>
<item><extref docno="TM 750-244-5-1"></item>
<item><extref docno="TM 750-244-6"></item>
</randlist></para></destructmat>
```

<*nomenreflist*>
<*para*>This listing includes nomenclature cross references used in this manual.
<*deflist*>
<*term*>Brush guard</*term*><*def*><*para*>Duck core rubber sheet</*para*></*def*>
<*term*>CVC helmet</*term*><*def*><*para*>DH 132 helmet</*para*></*def*>
<*term*>Dipstick</*term*><*def*><*para*>Liquid measure gage rod</*para*></*def*>
<*term*>Firing port weapon</*term*><*def*><*para*>M231 5.56mm submachine gun</*para*></*def*>
<*term*>Hot box</*term*><*def*><*para*>25mm ammo container</*para*></*def*>
<*term*>Lock wire</*term*><*def*><*para*>Nonelectrical wire</*para*></*def*>
<*term*>MRE heater</*term*><*def*><*para*>Heater, water and ration</*para*></*def*>
<*term*>Surge tank</*term*><*def*><*para*>Tank radiator auxiliary</*para*></*def*>
<*term*>Squad headset</*term*><*def*><*para*>H-366/VRC headset</*para*></*def*>
<*term*>Starlight scope</*term*><*def*><*para*>Night vision sight, individual served weapons</*para*></*def*>
<*term*>Steering yoke</*term*><*def*><*para*>Steering wheel</*para*></*def*>
<*term*>TOW missile</*term*><*def*><*para*>Guided missile, surface attack, telemetry, BGM-71A, TOW</*para*></*def*>
</*deflist*>
</*para*></*nomenreflist*>
<*loa*>
<*para*>Many abbreviations are used in this manual. They are listed below. Learn what each one means. It will make your job easier.
<*deflist*>
<*term*>A</*term*><*def*><*para*>After</*para*></*def*>
<*term*>Ammo</*term*><*def*><*para*>Ammunition</*para*></*def*>
<*term*>AP</*term*><*def*><*para*>Armor Piercing</*para*></*def*>
<*term*>Assy</*term*><*def*><*para*>Assembly</*para*></*def*>
<*term*>AUTO</*term*><*def*><*para*>Automatic</*para*></*def*>
<*term*>B</*term*><*def*><*para*>Before</*para*></*def*>
<*term*>BELRF</*term*><*def*><*para*>Bradley Eyesafe Laser Range Finder</*para*></*def*>
<*term*>BO</*term*><*def*><*para*>Blackout</*para*></*def*>
<*term*>BRT</*term*><*def*><*para*>Bright</*para*></*def*>
<*term*>CAL</*term*><*def*><*para*>Calibration</*para*></*def*>
<*term*>CFV</*term*><*def*><*para*>Cavalry Fighting Vehicle</*para*></*def*>
<*term*>CKT BKR</*term*><*def*><*para*>Circuit Breaker</*para*></*def*>
<*term*>CVC</*term*><*def*><*para*>Combat Vehicle Communications</*para*></*def*>
<*term*>D</*term*><*def*><*para*>During</*para*></*def*>
<*term*>DCS</*term*><*def*><*para*>Digital Compass System (MV103AFV)</*para*></*def*>
<*term*>DEG</*term*><*def*><*para*>Degrees</*para*></*def*>
<*term*>DECLIN</*term*><*def*><*para*>Declination</*para*></*def*>
<*term*>Decontn Appar</*term*><*def*><*para*>Decontamination Apparatus</*para*></*def*>
<*term*>DISCH</*term*><*def*><*para*>Discharge</*para*></*def*>

```
<term>Flex hose</term><def><para>Flexible Hose</para></def>
<term>FWD</term><def><para>Forward</para></def>
<term>GPS</term><def><para>Global Positioning System</para></def>
<term>HE</term><def><para>High Explosive</para></def>
<term>Hex</term><def><para>Hexagonal, having six sides</para></def>
<term>HI-TEMP</term><def><para>High Temperature</para></def>
<term>ID PLATE</term><def><para>Identification Plate</para></def>
<term>IFV</term><def><para>Infantry Fighting Vehicle</para></def>
<term>INT</term><def><para>Internal</para></def>
<term>Intercom</term><def><para>Intercommunication</para></def>
<term>ITV</term><def><para>Improved TOW Vehicle</para></def>
<term>M</term><def><para>Monthly</para></def>
<term>MCD</term><def><para>Missile Countermeasure Device</para></def>
<term>MRE</term><def><para>Meal Ready to Eat</para></def>
<term>NAV</term><def><para>Navigation</para></def>
<term>NBC</term><def><para>Nuclear, Biological and Chemical</para></def>
<term>OVE</term><def><para>On Vehicle Equipment</para></def>
<term>PLGR</term><def><para>Precision Lightweight GPS Receiver</para></def>
<term>PMCS</term><def><para>Preventive Maintenance Checks and Services</
para></def>
<term>POL</term><def><para>Polarity</para></def>
<term>PRESS</term><def><para>Pressure</para></def>
<term>RAD</term><def><para>Radio</para></def>
<term>SER</term><def><para>Service</para></def>
<term>SET CRS</term><def><para>Set Course</para></def>
<term>TEC</term><def><para>Transmission Electronic Controller (HMPT
500-3EC)</para></def>
<term>TEMP</term><def><para>Temperature</para></def>
<term>TRANS</term><def><para>Transmission</para></def>
<term>TRK</term><def><para>Track</para></def>
<term>Vent</term><def><para>Ventilation</para></def>
<term>W</term><def><para>Weekly</para></def>
<term>XTE/ST</term><def><para>Cross Track Error/Steer-To</para></def>
</deflist></para></loa>
<sftyinfo>
<para><null></para>
</sftyinfo>
</ginfowp>
```

5.3.1 **Information grouping.** Information developed in accordance with MIL-STD-40051 and MIL-STD-2361(SC) is organized into chapters containing similar functional information (e.g., maintenance chapter, troubleshooting chapter, etc.), and content-tagged to support retrieval from a database. Specifically, the use of SGML structured information, in conjunction with database technology and content-tagging, facilitates information access, sharing, reuse, management, control, and change. Database technology provides

a variety of powerful SGML tools and utilities, such as searching capabilities, and allowing large information repositories to be broken down and rearranged intelligently into individual documents.

5.3.2 **Work package reuse.** There are instances in which the same work package(s) may be used, without modification, on more than one end-item of equipment. Also, there will be instances when most of the information in a work package will apply and be used on more than one end-item of equipment, but will require minor changes to small portions of the work package information in order to tailor coverage to other end items or systems. The Digital Publications Development concept for information reuse focuses primarily on the reuse of work packages, or portions of work packages, to the maximum possible extent by either direct reuse or by filtering/overlaying information on top of existing work package data.

a. Work package reuse is defined as a single source work package with the same task/procedural intent, that may be used for TM authoring for one or more end-items.

b. Task/procedural intent is defined as tasks/procedures required to perform the same or similar function, but may or may not have the same wording. Establishing a publications source database is a mandatory element of work package reuse.

5.3.2.1 **Filtering and overlaying work package information.** Overlaying is defined as adding or hiding portions of original information. Filtering is defined as setting a criteria to include or exclude information. The filtered information would be associated to specific work packages by revision number. SGML elements and attributes may be used to indicate variations within the modified work package text. The criteria for assigning and controlling filtering/overlaying would be the major end-item(s) NSN to which the work package is applied. This methodology could be used by authors to search for work packages by particular end-item equipment that is closely associated, or the same as, the end-item on which they are working, and to note the variations within the work package to determine the best fit or variation needed to satisfy their needs.

5.3.2.2 **Work package reuse examples.** The following examples are provided as guidance for the various ways work packages may be reused. There are two types of examples: Figure 4 is for direct reuse and Figure 5 is for reuse using the technique for overlaying information.

a. Direct reuse. Direct reuse is use of the same work package on more than one end-item equipment with no modification to the work package. The direct reuse example shown below represents an instance where one work package (WP 3 data) is used for Bradley Fighting Vehicle (BFV) A2 engine data, and is reused for two different vehicle end-items configured with the same engines (BFV A3 and Bradley Fire Support Team (BFIST) Vehicles).

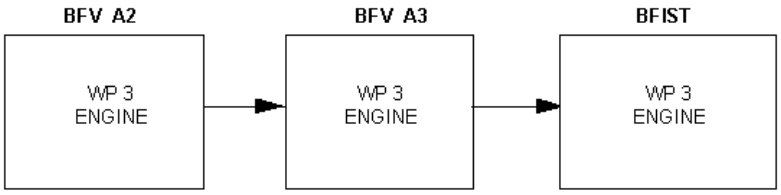

Figure 4 Example 1 Direct Reuse

b. Overlay reuse. Overlay reuse starts with the original work package contained in the BFV A2 vehicle. The BFV A3 contains the same work package tasks, but requires the addition of two steps to a procedure and a change in the initial setup references to correspond to the BFV A3's system. The BFIST has the same task as the BFV A3, but requires a change of the location of a hatch from "left" to "center" of the BFIST vehicle. The remaining work package

information is directly reused. The future prototype vehicle reuses the original configuration with some modification to the initial setup references and the removal of a step.

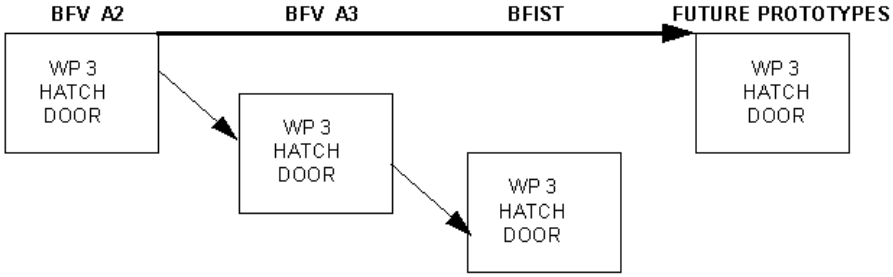

Figure 5 Example 2 Overlayed Reuse

5.3.2.3 **Work package initial setup.** The "initial setup" is the primary guide to determine if a new work package should be created, or could be filtered/overlaid by other text. The initial setup conditions must be the same, except for references, to constitute justification for reuse. For example, modifications to the initial setup which do not change the intent of the work package, but change the work package reference or applicable configuration (i.e., for another end-item) are candidates for reuse. The initial setup guide below may be used to determine if a new work package should be created, or an existing work package can overlay with other text.

Table 5-1. Initial Setup Guide

Initial Setup Components	New WP	Filter	Rationale
Maintenance Level	X		Same maintenance level must be performed.
Applicable Configuration		X	The applicable configuration might vary because of different end-items, but the tasks and setup remains the same or similar.
Test Equipment	X		Changes to the test equipment would indicate changed procedures or steps are needed to use this equipment, possibly changing the intent of the work package.
Tools/Special Tools	X	X	Changes to the tools/special tools would indicate changed procedures or steps needed to use these tools, possibly changing the intent of the work package. ONLY variation is the SIM reference to the SIM work package, tool, and item number for the particular end-item.
Material/Parts	X	X	Changes to the material/parts would indicate changed procedures or steps needed to use these parts, possibly changing the intent of the work package. ONLY variation is the SIM reference to the SIM work package, part, and item number for the particular end-item.
Personnel Requirements		X	Personnel requirements may change. A change is permitted when the sub-equipment is the same, but mounted on various end-items.

Initial Setup Components	New WP	Filter	Rationale
Reference		X	Reference may change because of different end-items, but the intent and purpose to the reference are the same.
Equipment Condition	X	X	The equipment must be in the same condition state, otherwise the difference changes the initial purpose for the work package. ONLY variation is the referenced work package in how to put the equipment in the ready state, but must be referencing a similar type of condition.
Special Environment	X		The special environmental conditions must remain the same, otherwise how to perform the task would become varied and change the purpose of the task.
Drawing Requirement	X	X	The drawing requirements must remain the same, other changes or modifications to the parts or test equipment is possible. The only exception is if the locator drawing is different, then a new work package is not required.

5.3.2.4 **Additional guidance for work package reuse.** Besides the initial setup guidance, the following will also govern work package reuse:

a. No variation in the work package title is allowed.

b. No tasks or procedures may be added to, or removed from the work package.

c. No information added to, or removed from, the work package can affect the initial setup new work package column (see Table 5-1).

d. No changes may be made to warnings or cautions associated with work package steps, except for references to other work packages.

e. New warnings or cautions may be associated with new steps added.

f. Warnings or cautions may be removed only when the associated step is removed.

5.3.3 **General TM Development Process and Flow.** The flow diagram in Figure 6 illustrates a typical contractor TM development cycle. The process shown is a subset of the overall logistics support development which is depicted as “Gather Source Data” in the figure. Typically, a TM develops through three iterations: Preliminary Draft Equipment Publications (PDEP); Draft Equipment Publications (DEP); and Final Draft Equipment Publications (FDEP).

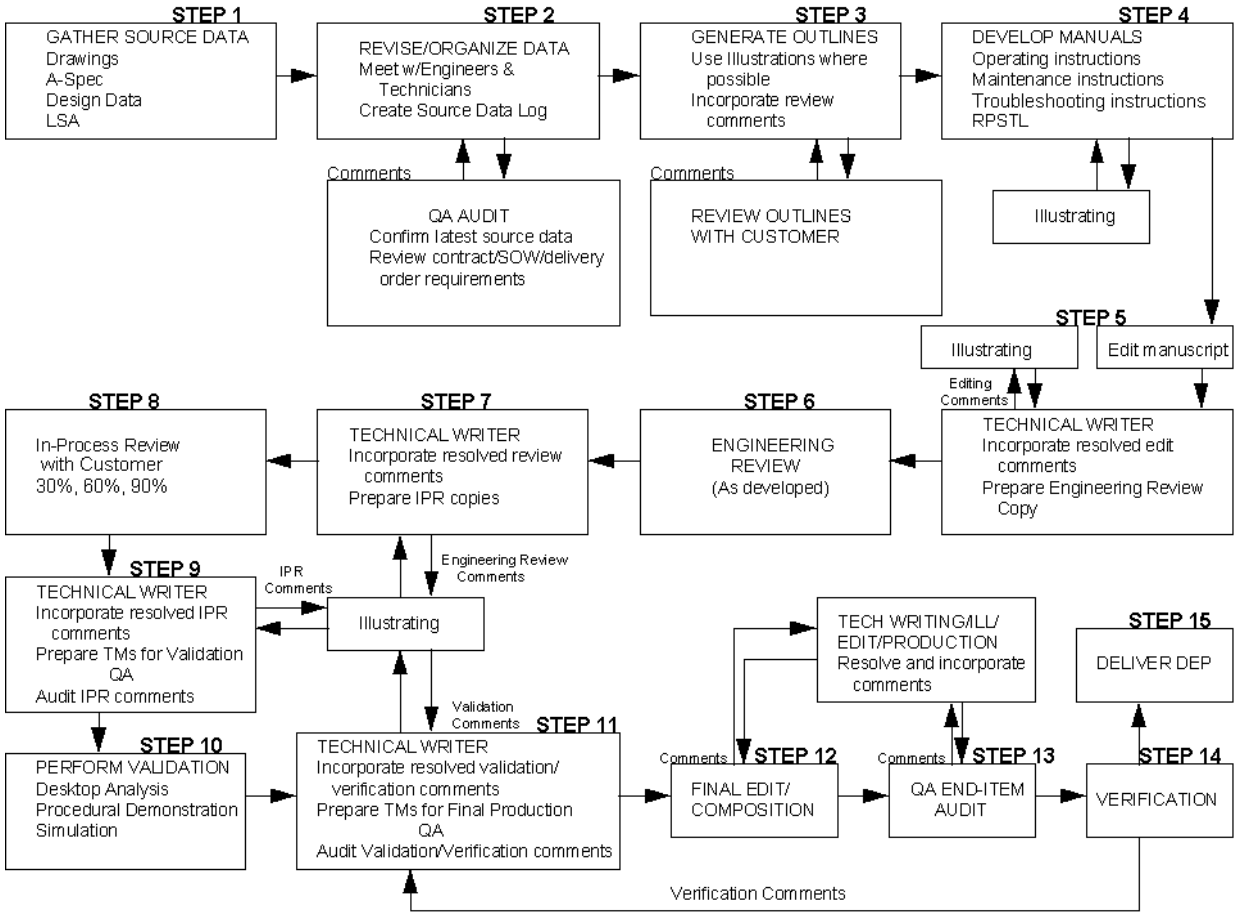

Figure 6 Technical Manual Development Cycle

5.3.3.1 The PDEP and DEP are developed during the development cycle of a weapon system and are generally used in testing the weapon system. The FDEP is developed in the production cycle of a weapon system and, when printed and distributed, is the TM used in the field. The FDEP is usually a modification of the DEP resulting from changes to the weapon system prior to the start of production.

5.3.3.2 Figure 6 shows the process of how a TM is organized, developed, reviewed for accuracy during the development process, validated (usually by the writer), and verified (by the customer). Comments are constantly flowing to the database until all verification comments are resolved and included in the FDEP. The FDEP, upon delivery, may be used for printing or final digitalization.

5.3.4 **Traditional Paper TM Development: Process and Flow.** Figure 7 shows the typical mechanics of developing paper TMs under the current specifications. The digital text file is produced in a standard word processing system and marked up for formatted output. Illustrations are prepared using CAD/CAM software, graphics illustration software, illustrators, or scanned from existing sources. The illustration files are merged into the digital file during the process of composition. Pages are composed according to the specified format for the level of maintenance for which the TM is being prepared. Each page created may be output on reproducible paper, film, or on a laser printer to obtain camera-ready copy. The camera-ready copy is made

into offset plates and printed using conventional offset methods. The printed manual is generally distributed in looseleaf form. The digital file of the composed TM, with its illustration files, is available for the revision process.

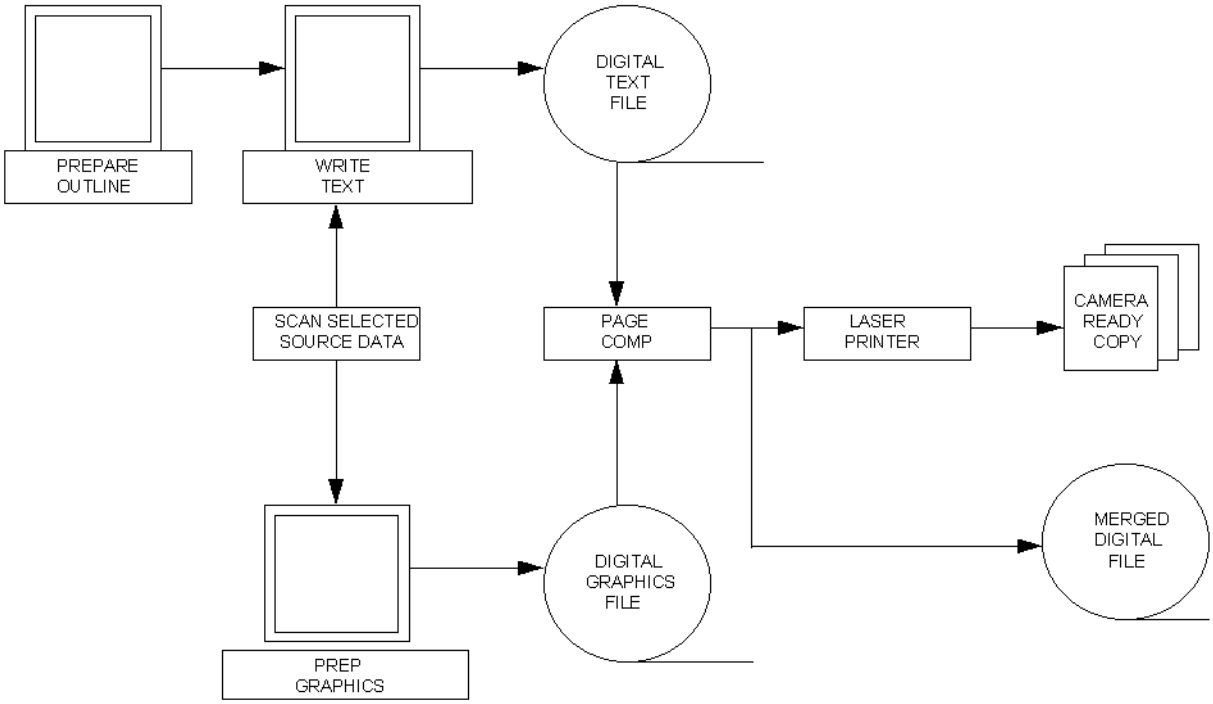

Figure 7 Traditional Paper TM Development Process and Flow

5.3.5 **TM Development with MIL-STD-2361(SC).** Figure 8 illustrates this flow of TM development under MIL-STD-2361(SC). The gathering of source data will remain essentially unchanged at first, although improved methods of digital capture of data could flow from MIL-STD-2361(SC) in the future.

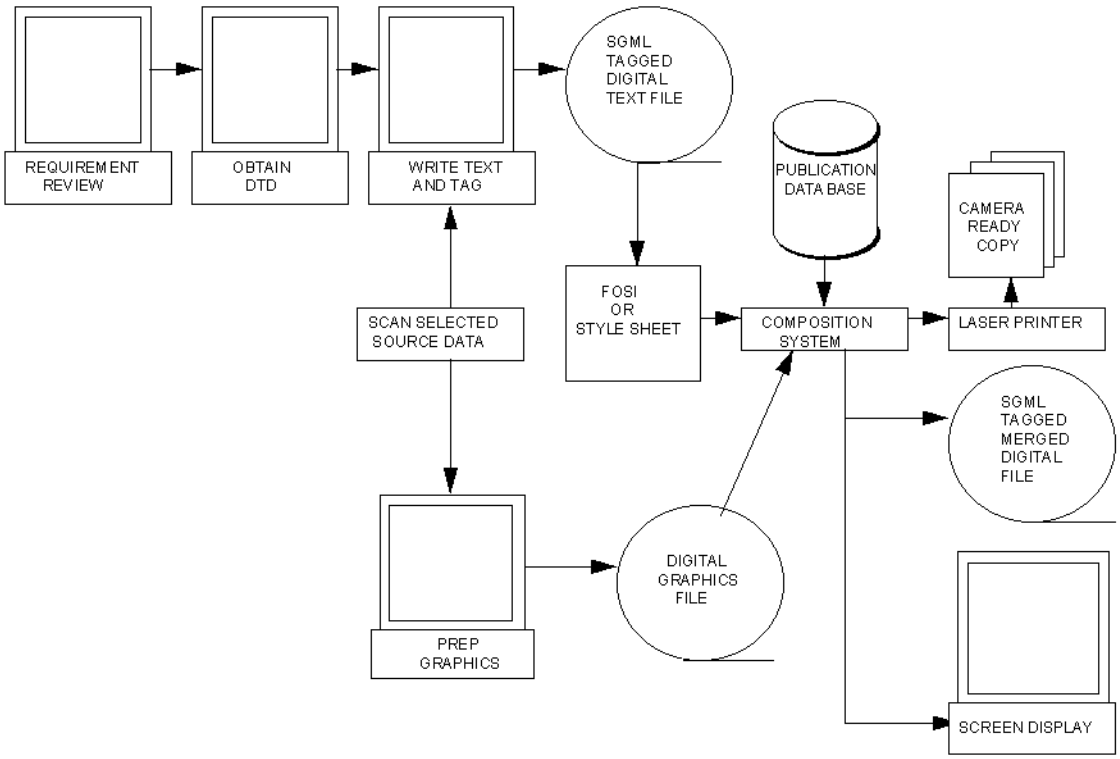

Figure 8 TM Development with MIL-STD-2361(SC)

5.3.5.1 **Requirements review.** Requirements may be received as a Request for Proposal (RFP), a contract, or modification to a contract. Upon receipt of the requirements, Subject Matter Experts (SME) and managers should review the requirements to determine that they reflect the customer stated end-product (the deliverable). Areas that are unclear or apparently misstated, should be noted for discussion with the requirement proponent. The requirements review should, as a minimum, determine the following:

a. Location of documentation, such as standards or specifications, required to complete the task. The documentation may accompany the contractual document as an attachment or exhibit. Frequently, however, contractual documents specify requirements by reference and direct the TM developer to a specific address to obtain the documentation.

b. Version, identification, and availability of Document Type Definitions (DTD) and other SGML objects and constructs required to develop the TMs in accordance with the Government requirements. Again, the DTDs may be provided with the contractual document. Or, they may be referenced and direction provided to contact the Administrative SGML Registry and Library (refer to paragragh 6.2 for further information) to obtain the DTDs and other associated SGML objects and constructs.

c. Legacy and new TM development. This is an important determination for both level of effort required and cost to complete the effort. Application of SGML to legacy data requires conversion from either paper or digital documents, and is normally time consuming, labor intensive, and costly.

5.3.5.2 **SGML object and construct review and setup.** The DTDs, and other SGML objects and constructs, must be acquired, either from the contracting activity as part of the contractual document, or from the ASRL. If the DTDs are not included with the contractual document, a Formal Public Identifier (FPI), location, and procedures for access should be provided for each required DTD. Figure 9 illustrates a general overview of the functional flow for the SGML setup.

Figure 9 SGML Setup Process

Once the DTDs and associated SGML objects and constructs (e.g., FOSIs, tag description lists, etc.) have been obtained, the following should be accomplished:

a. Check the FPI, abstract, DTD, and FOSI to ensure the correct, contractually required (e.g., version number) SGML constructs have been provided. There may be more than one version of a DTD.

b. Parse the DTDs on an ISO-8879 compliant parser (e.g., SGMLS, etc.) Parsing should be done immediately after the DTDs are received. This will ensure the correctness of the DTDs and preclude TM development with a DTD containing errors. If the DTD does not parse, the provider of the DTD (contracting activity or the ASRL) should be contacted immediately.

c. Load the DTDs and, if appropriate, FOSIs on the SGML platform(s) and setup for the specific SGML tools (e.g., ArborText Author/Editor, Near & Far Author, and Soft Quad's Author Editor). If problems are encountered the ASRL maintains a capability for technical and SGML help.

d. Determine if conversion routines will be required for the FOSI to publish on existing platforms, and ensure development of the routines is included in the development cycle schedule for the TMs.

5.3.5.3 **Document Type Definition (DTD) as the Outline.** An outline of the manual, traditionally developed by the contractor as a deliverable, is not required when using the DPD concept and MIL-STD-2361(SC). The MIL-STD-2361(SC) DTD, provided by the Government as Government Furnished Information (GFI), can be used to develop the "outline" of the required TM in accordance with the functional requirements of MIL-STD-40051. The DTD reflects the structure of the content volumes of MIL-STD-40051. The main divisions of the manual are information chapters, which are comprised of work packages. Each of these divisions of the DTD have associated markup tags. In the case of TMs, the MIL-STD-2361(SC) SGML tags associated with each of the functional requirements contained in MIL-STD-40051 have been physically embedded in the standard (See Figure 10). TM developers are able to prepare and furnish outlines by selecting applicable MIL-STD-2361(SC) content tags which conform to content requirements specified in MIL-STD-40051.

5. **DETAILED REQUIREMENTS.**

5.1 Preparation of Introductory information with theory of operation. Introductory information with theory of operation shall be prepared as a General Information Chapter **<gin>**. This chapter shall be subdivided into individual work packages to provide the user with information for completing forms and records, descriptive data about the weapon system or equipment, and an explanation of how the weapon system or equipment works. Information shall be divided into the following work packages.

a. General information work package **<ginfowp>**.

b. General information work package **<pms-ginfowp>** (Preventive Maintenance Services Manual only).

c. Equipment description and data work package **<desewp>**.

d. Theory of operation work package **<theywp>**.

e. Support data work package **<supdatawp>** for repair parts; special tools; Test, Measurement, and Diagnostic Equipment (TMDE); and support equipment.

Figure 10 Example of embedded tags in MIL-STD-40051

5.3.5.4 **TM Development.** Upon receipt of the appropriate DTD, the writer can begin developing and writing the individual work packages. The writer can follow much the same development path as usual, EXCEPT that the material being developed must be tagged in accordance with the DTD that applies to the information chapter in which the work package appears. Most of the SGML author/editor tools today have "concurrent parsing" (which can be turned on and off) that "parses as you write." In other words, it will not allow incorrect tagging. The organization to which the technical writer or editor belongs may arrange tagging to suit its own structure and work flow. Tagging may be done by the TM writers themselves, or by specially trained staff. In general, a subject matter expert (SME) will understand what tags are appropriate to apply. Illustrations may be incorporated by marked-up references to their placement in the manual and called into the TM for outputting the document or portions of the document.

5.3.5.5 **Layout and Style.** An important difference from current TM development practices is the use of a FOSI or style sheet, a formal method of specifying layout and style. This special SGML file maps the styles to be applied to the tags in the document (see P., FOSI Application as a Style Guide). The composition system interprets the FOSI or style sheet for composition of paper or digital output.

5.3.5.6 **Conversion of Legacy Data.** Figure 11 shows a generalized process for converting legacy data to MIL-STD-2361(SC) SGML-tagged data. Once the decision to convert legacy data to SGML is made, the legacy data should be available in electronic form (text-based, not raster or vector images or pages). If the legacy data to be converted is not available in this form, the data must be re-keyed or captured by text scanning. The digital legacy data must be restructured in accordance with MIL-STD-40051 requirements. The restructured data may then be tagged and reused in data resources in accordance with the MIL-STD-2361(SC) DTDs. The conversion of legacy data to MIL-STD-2361(SC) requirements will require re-allocation to other data resources in order to provide a complete implementation of the SGML constructs. Remember that the MIL-STD-2361(SC) SGML content tags are included in the MIL-STD-40051 narrative. After tagging, the SGML file must be parsed against the appropriate DTD(s) to validate the markup, structure, and syntax. For a more detailed discussion of legacy data conversion refer to Appendix A, SGML Tutorial.

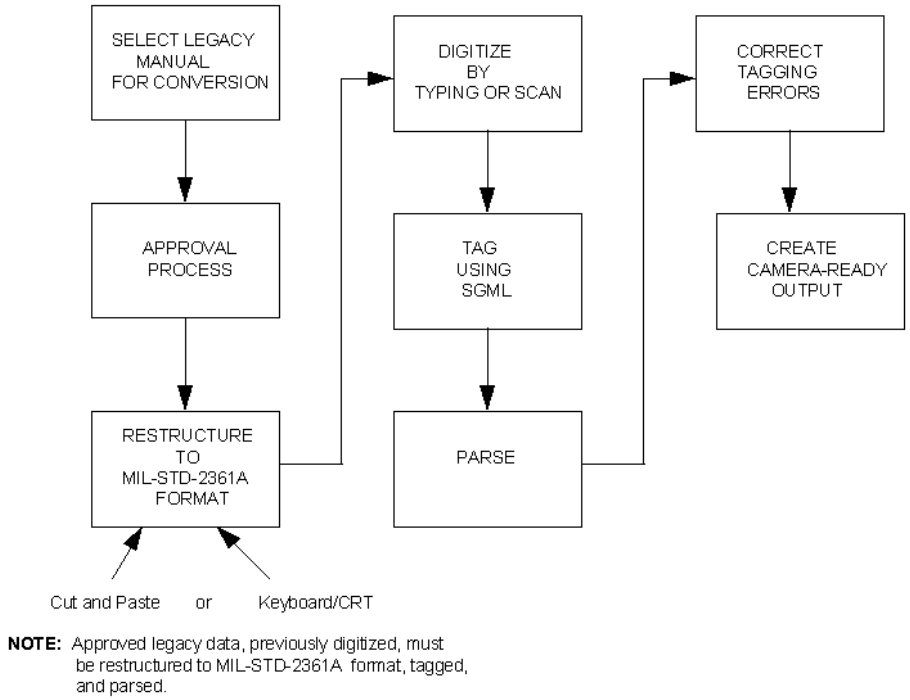

Figure 11 Conversion of Legacy Data

5.3.6 **SGML Process.** The SGML process follows the general outline in the following paragraphs. For a more extensive explanation of SGML and its application to TM development, see A, SGML Tutorial. Figure 12 is an overview of the SGML process from the developers perspective.

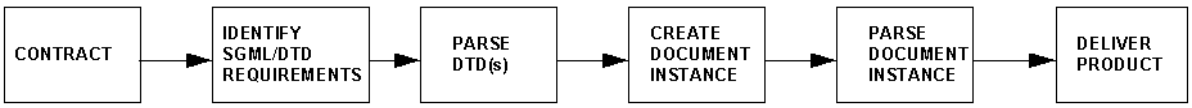

Figure 12 SGML Process

5.3.6.1 **Applying the Appropriate DTD.** The first step in the process is to identify the DTD requirement(s) (called out in the contract) relating to the appropriate information chapter (e.g., MIM, TIM, etc.) of the material being authored or tagged. Once the determination is made that the correct DTDs are on-hand, they should be parsed to ensure they are valid, error-free DTDs prior to use in the development process. The SGML tags will have to be applied (in the case of legacy data), or the TM content information created (new publication development), within the context and parameters of the DTD and the functional requirements for technical manuals contained in MIL-STD-40051. The process can be accomplished by use of SGML authoring software, or in a word processing system by manual insertion of tags.

5.3.6.2 **Creation of Document Instance.** To create a document instance, the tags declared in the DTD must be integrated into the text of the document, whether material is being authored for the first time or legacy data is being converted. The SGML markup (the tag set) takes the place of any format oriented markup. A document instance is a tagged file with a complete structure conforming to its relevant DTD.

5.3.6.3 **Validation (Parse) of Markup Syntax.** Before proceeding to output a document or information chapter, the document instance must be tested (parsed) to validate that the markup conforms to the syntactic and structural rules of SGML and the DTD. Any errors found by the parser must be corrected before proceeding further.

5.3.6.4 **Creation of Required Output.** Creation of the required output may include several forms. Requirements for the appropriate type(s) of output will be contained in the Contract Data Requirements List (CDRL) accompanying the contract vehicle. All of the following options are supported by MIL-STD-2361(SC).

a. Using a FOSI or style sheet to direct the composition of the document in page-oriented format for printed output, or for the WYSIWYG screen display in the composition software.

b. Generation of a suitable page description language file to drive printer, typesetter, or viewing software.

c. Outputting for on-screen access in a navigable database format.

d. Retrieving directly from a comprehensive SGML database of all TMs for on demand printing.

5.3.7 **Validation and Verification Process.**

5.3.7.1 **Validation of an SGML Document.** Preparation of documents in an automated support environment typically consists of the following steps:

a. Downloading an approved Document Type Definition (DTD) and Formatting Output Specification Instance (FOSI) from the ASRL.

b. Parsing the DTDs and FOSIs.

c. Creating a document instance.

d. Parsing the document instance.

e. Using the approved FOSI and DTD to compose the composition of the document so that the produced (printed or displayed) copy corresponds to the proper format and style.

5.3.7.2 **Parsing MIL-STD-2361(SC) TM DTDs.** The process of validating (compiling) DTDs once they are written is known as parsing. Commonly referred to as a validating SGML parser, the ISO-8879 Standard defines the parser as “A program (or portion of a program or a combination of programs) that recognizes markup in SGML conforming documents.” A validating SGML parser will read a DTD and check the markup, and report any errors found to an error file log. It is the responsibility of the user to re-parse DTDs downloaded from the ASRL.

a. Most of the commercial SGML authoring tools on the market today contain a built-in validating parser. To create SGML documents which conform to a DTD downloaded from the ASRL an editor and a parser is needed.

b. The editor is used to input information and insert SGML markup into the document; the parser is used to check that the markup and the way it has been used conform to the rules given in the DTD. Many commercial packages offer syntax-directed editors, which interactively ensure that any editing and markup operations conform to the rules of the DTD.

c. Once a valid SGML document that conforms to a valid SGML DTD has been developed, it may be wise to do some subsequent processing. For example, in order to get paper output, you will need to use a MIL-STD-2361(SC) FOSI, which conforms to MIL-PRF-28001, in conjunction with a composition system to read the SGML document and produce a paper output.

d. It is recommended that the following SGML parsers be used when parsing DTDs that have been downloaded from the ASRL:

- SGMLS - SGMLS parses and validates the SGML document entity in file name . . . and prints on the standard output a simple ASCII representation of its Element Structure Information Set.
- NSGMLS - NSGMLS parses and validates the SGML document whose document entity is specified by the system identifiers sys id . . . and prints on the standard output a simple text representation of its Element Structure Information Set.

5.3.7.3 **Valid SGML Document vs. Conformance to MIL-STD-40051.** Parsing the SGML document does not verify that the information or content of the TM matches the meaning for the SGML element and/or MIL-STD-40051. The contracting activity will be responsible for verifying that the TM content is in compliance with the contract, applicable SOWs, and MIL-STD-40051 requirements.

5.3.7.4 **Formal Public Identifiers for Entities.** Each formal public identifier (FPI) for graphics and file entities must have a file name associated with that FPI. The FPI is mapped to the file name by using an SGML catalog. The format for the SGML catalog is displayed below.

PUBLIC “-//Owner//ENTITIES Public_Title Rev X.XX YYYYMMDD//EN” “(DIR)file.name”

By making modifications as necessary in the SGML catalog and changing the (DIR) to the specific directory on the target system or modifying the file name to the corresponding operating system restrictions, the correct mapping will be established. Every file entity with an FPI must have an entry in the SGML catalog. Verification of the FPI for entities must satisfy two criteria. The first criteria is that each file identified in the SGML catalog must be included with the electronic delivery. The second criteria is to verify that each FPI in the SGML document instance is defined in the SGML catalog. If either criteria fails, the SGML document instance is unacceptable.

5.3.7.5 **ID and IDREF Resolved.** The document instance must have an associated ID value for each IDREF in the document instance. A document that does not have an associated ID value for each ID referenced is an incomplete document and unacceptable.

The two methods to verify that all IDREF(s) are resolved are to use either an SGML editor or a software application. The simplest verification method is to use an SGML editor that verifies all IDREF(s) automatically. The SGML editor will display the unresolved IDREF(s).

The other methodology is to develop a software application to identify all attributes with IDREF and ID, which stores the values in a separate list for each respectfully. The application sorts each list and matches the IDREF values to the ID values. The application will display the missing IDREF(s) with no resolution.

5.3.7.6 **IETM - Link Verification.** IETM link verification processes are currently being developed and will be included in the first revision of the handbook.

5.3.7.7 **Published Document Produced by SGML Instance.** The publications developer must verify that the published manual was produced from the SGML instance. When the published manual is not produced from the SGML document instance, errors may reside in the SGML document instance that were corrected or updated in the published manual. To verify that a published document was composed from an SGML

document instance, a written certification declaring the electronic SGML document instance used to compose the final delivered published manual will be included with the delivery. The certification will specify the methodology used to compose the SGML document instance to the published manual.

5.3.8 **Acquisition guidance.** Technical Manual (TM) requirements proponent personnel (e.g., TM writers) develop the portion of procurement data packages (PDP) that provide the TM requirements placed on contract by procurement personnel. The TM portion of PDPs are normally compiled and included in pre-contract documents, such as solicitations and Request for Proposals (RFP). The following paragraphs address some of the different mechanisms (e.g., forms, standards, procedures, etc.) that are involved in applying TM requirements to contractual documents.

5.3.8.1 **CDRL.** CDRLs are the primary requirements documents for conveying TM data format, context, and delivery requirements to publications developers. The CDRL is also a primary means for defining SGML requirements to a publication developer. Activities involved in a weapon system development are queried, through a “Data Call”, to provide data requirements specific to their functional area. The SGML aspects of the TM requirements may be provided by the activity responding to the data call, or some other functional activity (e.g., an SGML specialist on a PM staff), depending on where SGML functional expertise is available. One of the major results of a data call is the requirements associated with the development of TMs for the weapon system. Based on the TM requirements received as a result of the data call, CDRLs are developed as a means of explicitly describing the requirements. The TM CDRLs are an integral part of the PDP and each CDRL should be supported by a Statement of Work (SOW) task, describing the work effort required to develop the TMs associated with the CDRL. Following are some of the areas that may be addressed in a CDRL. These areas are not all inclusive, and are provided as guidance only.

5.3.8.2 **Statement of Work (SOW).** Each CDRL will have an accompanying SOW, or be included in the contract SOW, describing the work effort and requirements required to develop the respective TMs. The SOWs are prepared by the activity that provides CDRL information in response to a data call. The SOW becomes a binding part of the contractual documentation.

5.3.8.3 **Conversion of Legacy Data.** The CDRL may direct the contractor to convert specified existing non-SGML data (legacy data) into SGML. The legacy data may consist of previously developed TMs for an existing weapon system or subsystem. The CDRL will provide the version of the DTD and FOSI to be used for conversion, and any other applicable SGML requirement information.

5.3.8.4 **GFI/GFE Source Information.** The CDRL will provide identification of required GFI/GFE, such as legacy TMs for conversion, that are required for conversion by the developer. If the GFI/GFE is not provided as part of the PDP, its location and procedures for acquiring it will be provided as part of the contract.

5.3.8.5 **TM Requirements and Standards.** TM functional requirements are developed in accordance with MIL-STD-40051 and MIL-STD-2361(SC), MIL-PRF-28001 and FIPS-152 to cover application of SGML. The CDRL will identify these standards specifically as requirements.

5.3.8.6 **Location of SGML objects, constructs, and other information (DTDs, FOSIs, SGML tag description lists, documentation etc.).** All Army-approved SGML objects and constructs are contained in the Army SGML Registry and Library (ASRL). The SGML objects and constructs may be provided with the contractual document, or the TM developer may be directed to obtain the required objects and constructs from the ASRL. If the ASRL is the directed source for the DTDs, FOSIs, tags, etc., the following information will be provided in the CDRL.

a. Formal Public Identifier (FPI) of the DTD. The FPI is the official identifying designation of a particular version of a DTD. Each separate DTD, and each version of a DTD, has a unique FPI.
b. Information on how to access the ASRL. The CDRL will contain, either explicitly or by reference, the procedures to follow to gain access to the ASRL through the various means available.

c. Information on downloading DTDs, FOSIs, tag description lists, and documentation. The CDRL will contain, either explicitly or by reference, the procedures to be followed to download the SGML information needed by the TM developer.

d. Information on parsing the DTDs and FOSIs. The CDRL will reference the developer to the appropriate SOW, standard, etc., for detailed information on the parsing requirements for the TMs. The parsing information should contain requirements regarding parsing the digital SGML tagged instance file parsed against the DTD which was provided, and requirements for submitting a parsing log record.

5.3.8.7 **Tailoring the Work Packages for each type of TM manual.** MIL-STD-40051 and MIL-STD-2361(SC) establish the requirements for tailoring work packages for each type of TM (e.g., –10, –20, etc.). The CDRL will reference the appropriate portions of these standards for tailoring TM work packages. The appropriate SOW paragraphs will also be referenced in the CDRL.

5.3.8.8 **Required output medium.** The TM proponent will determine the output requirements and provide them to the contracting activity for inclusion in the contractual documentation (e.g., SOW, CDRL, etc.). The output requirements are included in the CDRL. Output file delivery requirements may be found in MIL-STD-2361(SC). Output delivery requirements may include the following.

5.3.8.8.1 **Paper.** Delivery of paper products are normally camera-ready output developed from an SGML document instance and FOSI or style sheet. The CDRL will specify the appropriate requirement(s).

5.3.8.8.2 **Electronic Technical Manual (ETM).** ETM delivery is normally a page-oriented digital product (e.g., page turner) suitable for viewing on an electronic display. MIL-STD-2361(SC) contains the requirements for ETMs and will be specified in the CDRL.

5.3.8.8.3 **Interactive Electronic Technical Manual (IETM).** IETM delivery products are normally contained in a database, or are comprised of information that is capable of being entered into a database in compliance with Government specifications. IETM delivery requirements may be found in MIL-STD-2361(SC), MIL-PRF-87268, and MIL-PRF-87269. The appropriate specifications and standards will be specified in the CDRL.

5.3.8.9 **Delivery medium.** The determination of the method in which TMs are delivered to the Government is the responsibility of the TM proponent. Determination of the appropriate method of delivery is often impacted, or directly determined, by Defense or Army policies. The method of delivery is contained in the CDRL as part of the contractual documentation. Possible, but not all inclusive, delivery mediums are provided below.

a. MIL-STD-1840 - Digital Tapes.

b. Compact Disk-Read Only Memory (CD-ROM).

c. Diskettes (3 1/2“ or 5 1/4”).

d. Tapes - 1/4“ Data Cartridge Tape.

e. Telecommunications (e.g., Internet, WWW, e-mail, etc.)

f. Paper - with one or more of the above methods.

6. ARMY SGML REGISTRY AND LIBRARY (ASRL)

6.1 **ASRL description.** The U.S. Army Standard Generalized Markup Language (SGML) Registry and Library (ASRL) contains Army-approved SGML objects and constructs, such as Document Type Definitions (DTD), Formatting Output Specification Instances (FOSI), and SGML Tag description lists authorized for use in the preparation of Army Publications. DTDs, FOSIs, and SGML Tags officially registered with the ASRL are authorized in developing Department of the Army (DA) publications, including administrative, doctrinal and training, technical, and equipment publications, and Electronic and Interactive Electronic Technical Manuals (ETM/IETM). The ASRL is responsible for interfacing with the Defense Information Systems Agency (DISA) Center for Standards (CFS) for all matters dealing with development and application of SGML within the Army. The ASRL is the Army operational site for the Department of Defense (DoD) Continuous Acquisition Life-cycle Support (CALS) SGML Registry (CSR) and CALS SGML Library (CSL). Throughout this section DTDs, FOSIs, and tag description lists are referred to as SGML objects and constructs.

6.1.1 **ASRL capabilities.** The ASRL may be used by publications developers to provide capabilities for the standardization and reuse of Army SGML objects and constructs. In this regard, the ASRL will provide for the establishment and support of the following:

a. Infrastructures (administrative and communicative) that provide easy access to standard SGML objects and constructs.
b. Processes to encourage use of standard objects and constructs by Army and defense contractor publications developers.
c. Processes to encourage timely submission of requirements not covered by existing SGML objects and constructs by Army and defense contractor publications developers.
d. Procedures for evaluation of requirements to determine whether or not they can be satisfied by approved SGML objects and constructs and, if required, development of new objects and constructs.

6.1.2 **Standardization and reuse.** The two primary ASRL methods for SGML standardization and reuse are direct reuse of existing, Army-approved SGML objects and constructs; and development of new objects and constructs by USAPA to satisfy requirements not covered by existing SGML objects and constructs.

6.1.2.1 **Direct reuse.** Direct reuse refers to the development of an SGML document instance (which represents some class of Army publication under development) based upon Army-approved SGML objects and constructs acquired from the ASRL. The publication developer will obtain the appropriate objects and constructs from the ASRL and use them to create the required SGML document instance.

6.1.2.2 **New SGML object and construct development.** This refers to the development of new SGML objects and constructs for requirements not covered by existing objects and constructs. A Government or contractor publications developer may identify a requirement(s) that supposedly is not covered by objects and constructs already included in the ASRL Library. The developer may submit a request, with full justification and rationale, to the ASRL Registry for evaluation of the requirement(s). Detailed submission procedures are contained in 6.4. Review of the ASRL Registry will determine if existing SGML objects and constructs can satisfy the requirement, or have features in common with the requirement that can be reused. If the requirement evaluation determines that new SGML objects and constructs are justified, they will be developed and tested by USAPA and included in the ASRL Library for Army-wide use.

6.2 **ASRL Concept of Operations.** This section describes the purpose, background, and overall concept of operations involving the ASRL and its related environment.

6.2.1 **Purpose of the ASRL.** The ASRL will contain all SGML Document Type Definitions (DTD), Formatting Output Specification Instances (FOSI), and associated SGML tags authorized for use in the

preparation of Army Publications. All DTDs, FOSIs, and SGML Tags must be officially registered with the ASRL prior to their use for developing any Department of the Army (DA) publication, including administrative, doctrinal and training, technical and equipment publications, and (ETM/IETM).

6.2.2 **Background.** The ASRL is a part of the Army strategy to achieve the digitization and integration of technical and business data. Employing SGML facilitates the digital exchange and integration of textual data. A component of an SGML application is the DTD. The DTD defines the rules that apply SGML to the markup of a particular type of document, such as a technical or training manual. The development of a DTD is time consuming, but once developed, it can be reused whenever another instance of that document type is generated. Reuse saves DTD development time and document instance markup time by using previously established markup rules. The ASRL was established to facilitate the reuse of Army SGML DTDs.

6.2.3 **ASRL organization.** Functional capabilities for the standardization and reuse of SGML objects and constructs are provided by the ASRL. The Army proponent for the ASRL is the USAPA DPD Program. The ASRL is comprised of the Registry and Library. Figure 13 illustrates the organizational structure of the ASRL.

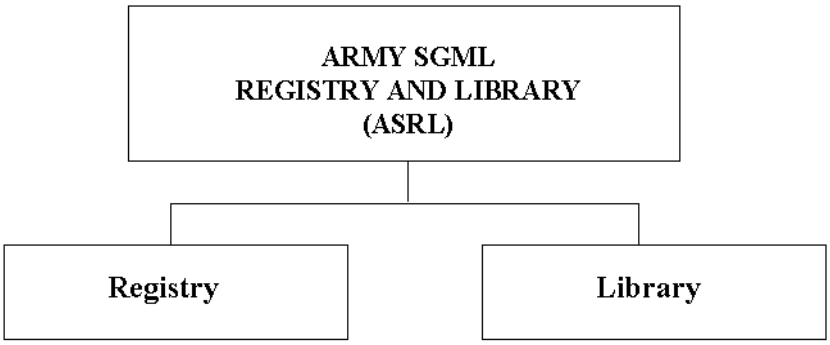

Figure 13 ASRL Organizational Structure

6.2.4 **ASRL Services.** The Library will provide the publications developers with a set of services that will enhance the SGML publication development process. The services provided by the ASRL Library include:

a. Library services to ensure user access and utility, such as automated sign-in/check-out; virtual navigation aids; browse, search, and find utilities; and configuration control of the SGML objects and constructs.

b. SGML analysis capability to support ASRL user needs.

c. Administrative assistance to provide help and technical support to ASRL users needs.

d. Registry services to evaluate new SGML requirements.

6.2.5 **ASRL Assets.** ASRL assets will include, but are not limited to:

a. SGML objects and constructs.

b. Army requirements and guidance documents, such as this handbook.

c. General SGML reference documents or pointers.

d. ISO 8879 compliant parser list.

e. Government Furnished Information (GFI), such as style sheets and instance processors.

f. Parser and SGML system tips, examples, and lessons learned.

g. Information regarding frequently asked questions about SGML, using the ASRL, etc.

h. Point-of-Contact (POC) listings.

i. ASRL access data, such as user statistics and library usage statistics.

j. SGML-based Freeware.

6.2.6 **Procedures for submitting existing SGML objects and constructs.** The ASRL registration process includes coordination with the DISA operated CALS SGML Registry (CSR) and CALS SGML Library (CSL) to ensure that Army SGML objects and constructs are not redundant, or otherwise duplicative of those approved for use throughout the DoD. There will be an established period during which existing Army SGML objects and constructs may be submitted to the ASRL Registry as candidates for incorporation into the ASRL Library. Such existing objects and constructs may be incorporated into the library under ”grandfather” approval. Approval will be contingent upon compliance with the appropriate requirements standards and is at the sole discretion of USAPA. Information and guidance regarding “grandfathering” SGML objects and constructs will be established and distributed by USAPA. This section of the handbook will be in effect only as long as the “grandfathering” period is in effect. This section will be deleted in future revisions. The following procedures will be followed for submission of existing SGML objects and constructs to the ASRL Registry as candidates for evaluation and acceptance into the ASRL.

a. Existing SGML objects and constructs (i.e., DTDs, FOSIs and associated tag descriptions) will be submitted to the ASRL for registration using the format and procedures described in 6.4 of this handbook.

b. Each submitted SGML object and construct will be reviewed by USAPA to assess its compliance with guidance in this handbook, MIL-STD-2361(SC), Digital Publication DevelopmentMIL-PRF-28001, Standard Generalized Markup Language, and other specifications or standards, as required.

c. SGML objects and constructs found to be not in compliance with applicable requirements standards and specifications will be returned to the submitting organization for revision.

d. SGML tags complying with applicable requirements standards and specifications will be compared with other tags in the Library. Where more than one tag exists for the same information, or where joint review is required, USAPA will coordinate with submitting organizations to establish a common tag.

e. SGML objects and constructs successfully completing the ASRL registration process will be incorporated into the library and become available for Army-wide use by publications developers.

6.2.7 **Procedures for submitting new SGML object and construct requirements.** The ASRL Registry provides a capability for evaluating new SGML requirements to determine whether or not they are covered by Army-approved SGML objects and constructs. This capability is used only after a publications developer has identified a set of specific structure and content requirements that are not addressed, or only partially addressed, by approved SGML objects and constructs.

a. The publications developer will submit the requirements, along with complete justification and rationale, to the ASRL Registry for evaluation. Detailed procedures and submission package format are described in paragraph 6.4 .

b. The ASRL Registry will review the requirements package for completeness. Incomplete or incorrect submission packages will be coordinated with the submitting organization.

c. The requirements will be evaluated by USAPA to determine whether or not there are Army-approved SGML objects and constructs that satisfy the submitted requirements.

d. When Army-approved SGML objects and constructs are identified that satisfy the submitted requirements the objects and constructs will be provided to a submitting organization. These SGML objects and constructs will be used for development or acquisition of Army publications.

e. Document structure and content requirements, or portions thereof, that cannot be satisfied using existing SGML objects and constructs will be identified by the ASRL Registry evaluation process. USAPA will develop new SGML objects and constructs for the requirements which cannot be satisfied by existing Army-approved objects and constructs.

f. The ASRL Registry evaluation and coordination process consists of technical and functional reviews by the ASRL Registry Administrator, and coordination through the ASRL Registry Registrar. This process identifies technical and functional issues associated with the new objects and constructs. This review process should take no longer than 30 days, depending on the size and complexity of the new SGML objects and constructs. New SGML objects and constructs are registered and approved for use only after all technical and functional issues have been resolved.

g. Upon notification of approval by the ASRL Registry, the publications developer will use the Army-approved SGML objects and constructs for the development or acquisition of Army publications. Once SGML objects and constructs have been validated and approved by the ASRL, they are made available for access and Army-wide use through the ASRL Library.

6.3 **ASRL Operations.**

6.3.1 **ASRL Repository Operations.** The ASRL holdings, services, technical assistance, and utilities may be accessed in several different ways in order to accommodate all ASRL users, regardless of the type of equipment available to them. The primary means of access for users will be through the World Wide Web (WWW) (refer to paragraph 6.3.3 for additional information). All of the current means of access to the ASRL are provided in the table below. Additional assistance may be obtained through the ASRL/USAPA home page. All users must apply for a user account at the ASRL/USAPA home page, by contacting the ASRL Help line or mail to the address listed below. Once users have applied for an account, the holdings of the Army SGML Registry and Library (ASRL) are available for free downloading from the Files directory on the ASRL/USAPA World Wide Web Site (http://www.asrl.com).

Table 6-1. ASRL Access

Access	Number/Address	Comments
WWW	http://www.asrl.com	ASRL direct.
U.S. Mail	Director, USAPA Attn: JDHQSV-PAP-E 2461 Eisenhower Avenue Alexandria, VA 22331	May request 3.5″ DOS formatted diskettes or .25" UNIX tar formatted tape.
Telephone	Commercial: (703) 428-0508/0504	USAPA telephone numbers.
	DSN: 328-0508/0504	
Electronic mail	asrl@monmouth.com	ASRL E-Mail address.
Facsimile (FAX)	(732) 578–9136	ASRL FAX number.
Support/Help Line	(800) 880-3773	ASRL help line. Toll-free. Available Monday-Friday, 8:00am - 5:00pm EST (except holidays).

6.3.2 **Assistance and Problem Reporting.** For DTD submission assistance (be prepared to state the problem or nature of assistance required), direct problem reporting (be prepared to provide a description of the problem), and customer help and technical assistance contact the ASRL administrator through any of the ASRL-designated means of access in table 6–1.

6.3.3 **Access via the Internet (WWW).** The homepage for the ASRL is accessed through the Uniform Resource Locator (URL) http://www.asrl.com. The ASRL Home Page provides for a sign-up capability as well as entry to the ASRL Library. By following the links and pointers on the ASRL Home Page (see Figure 14), developers will be able to view, search, find, and download SGML constructs and objects via the Internet WWW. A library card is required for downloading SGML constructs from the library (see Figure 16). Application for a library card may be obtained on-line on the ASRL Home Page (see Figure 15). Developers may also perform searches on key phrases.

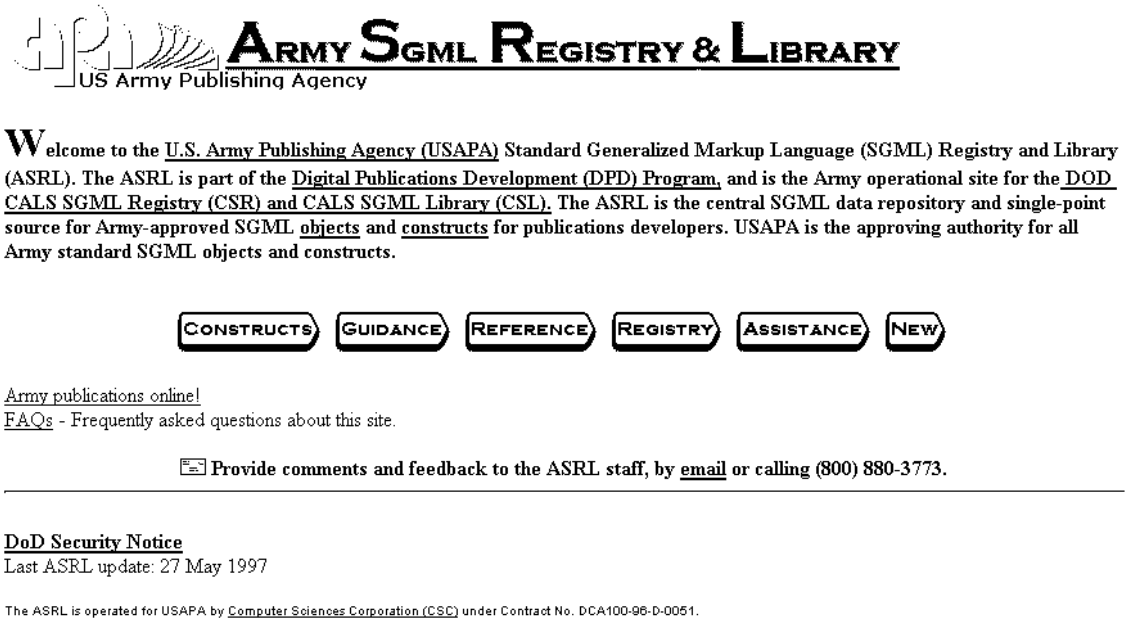

Figure 14 ASRL Home Page

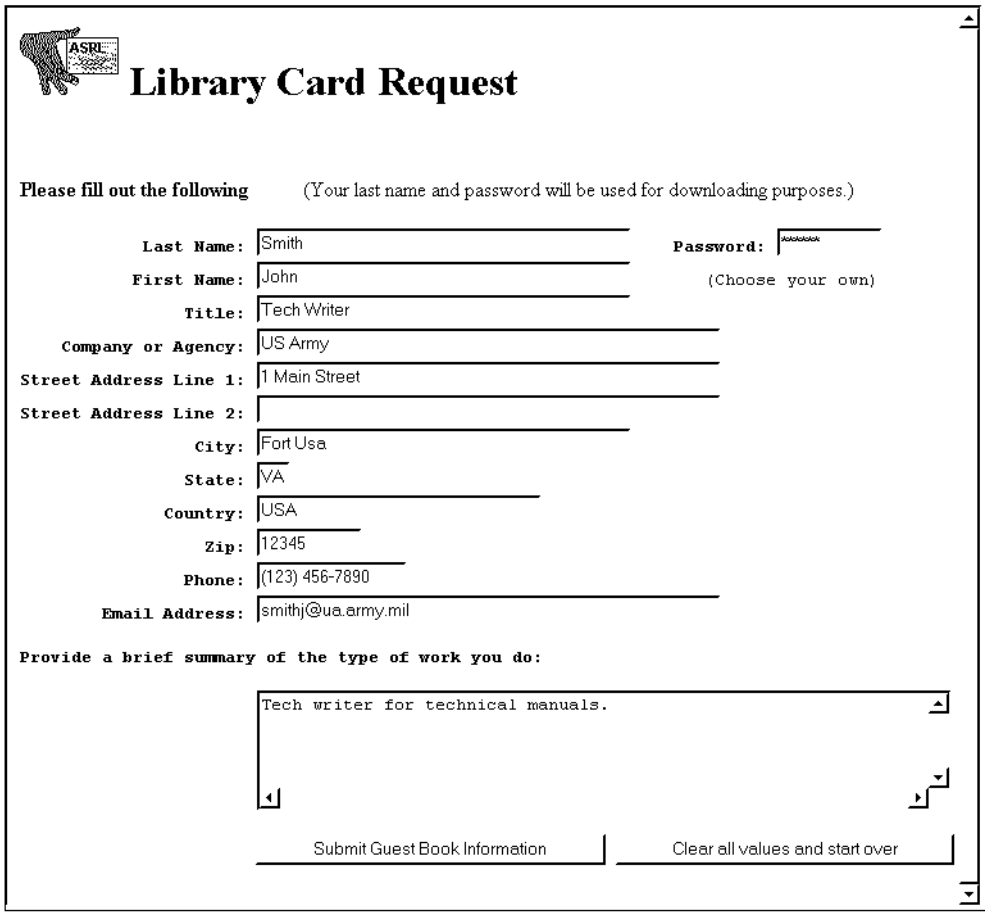

Library Card Request

Please fill out the following (Your last name and password will be used for downloading purposes.)

Last Name: Smith
Password: ******
First Name: John
(Choose your own)
Title: Tech Writer
Company or Agency: US Army
Street Address Line 1: 1 Main Street
Street Address Line 2:
City: Fort Usa
State: VA
Country: USA
Zip: 12345
Phone: (123) 456-7890
Email Address: smithj@ua.army.mil

Provide a brief summary of the type of work you do:

Tech writer for technical manuals.

Submit Guest Book Information | Clear all values and start over

Figure 15 ASRL Library Card Request

CONSTRUCTS

SGML Constructs

SGML constructs consist of document type definitions (DTD), formatting output specification instance (FOSI) and SGML tag definitions. You can obtain all MIL-STD-2361 constructs from this page.

Technical Manual (TM) Publications

TM DTD Abstract
TM Tag Description List [PDF file size: 1.1MB]
Download DTD (includes abstract and tag list)

TM FOSIs - not yet available.

Training and Doctrine Publications

NOTE: Training and Doctrine Publications are not available for downloading until operational testing is complete. The following items will be available after testing.

Army Training and Evaluation Program (ARTEP)
- Drill Books DTD and FOSI
- Mission Training Plans (MTP) DTD and FOSI

Soldier's Training Products (STP)
- Soldier's Manuals (SM) DTD and FOSI
- Military Qualification Standards (MQS) DTD and FOSI
- Trainer's Guides (TG) DTD and FOSI

System Training Plan (STRAP) DTD and FOSI

Field Manual (FM) DTD and FOSI

Administrative Publications

Download Army Regulation (AR) DTD
FOSI - Being finalized

Download Joint Army Regulation (JAR) DTD
FOSI - Being finalized

Download Army Circular (CIR) DTD
FOSI - Being finalized

Download Army Pamphlet (PAM) DTD
FOSI - Being finalized

GUIDANCE REFERENCE REGISTRY ASSISTANCE ASRL HOME

Figure 16 SGML Constructs

6.4 **Submittal Package Format Procedures.** This section describes the procedures for submitting DTD candidates for evaluation and approval to the ASRL. SGML DTD candidates should be submitted to USAPA at the ASRL. USAPA will review the candidates, and if there appears to be a conflict with functional requirements, USAPA will coordinate with the functional requirement proponent.

6.4.1 **Submission package.** Each submission package should be comprised of the following five parts.

a. Administrative information about the DTD, such as title, release date, alternate name, up to five keywords, etc.
b. DTD abstract containing a description of the purpose and content of the DTD.
c. The DTD.
d. A certification, signed by the submitting activity, that the DTD conforms to MIL-STD-2361(SC) and MIL-PRF-28001.
e. Parse logs from at least three parsers.

6.4.2 **Submission package contents.** Physical submission requirements vary depending upon the delivery option selected. The following paragraphs describe each part of the submission package.

6.4.2.1 **DTD Information.** Table 6-2 describes the data elements which comprise the DTD Information part of the submission package.

Table 6-2. DTD Information

ELEMENT NAME	DESCRIPTION	EXAMPLE
name	This is the DTD title. It is not to exceed 79 characters. It is all captial letters as per asset process requirments.	DTD for MIL-T-38804B Supplement DTD.
title	DTD Subject Matter. Not to exceed 79 characters. This format is in normal writing standard	-
version	Use "-" if no version info. (This is a place holder for future capability.)	
release_date	The date the DTD was released for submission (DD_MMM_YY)	09 Jan 94
alternate_name	This is the DTD's public identifier. Describes DTDs owner, title, and language written in. Not to exceed 79 characters.	-//USA-DOD//DTD MIL-T-38804B SUPP//EN
asset_size	The size of the DTD in kbytes.	15 kbytes.
keyword	Text string within the asset title or asset itself that allows the user to narrow the search for specific topics. Up to five keywords can be used. Each text string can contain up to 45 characters.	Technical Manuals MIL-T-38804B DTD TCTO AGE

support available	Y or N	Y
producer	Personnel email address	jdoe@army.mil

DTD information will be submitted in ASCII Format using the format template below. Each data entry must immediately follow the “=>” character in the template.

6.4.2.2 **DTD abstract.** Each DTD submitted must have an abstract. An abstract is a registry term for a user-provided narrative entry describing the DTD. The abstract should provide an overview of the DTD’s purpose, its public identifier (PI), and other information identifying the DTD.

begin asset
name ⇒
title ⇒
version ⇒
release_date ⇒
alternate_name ⇒
asset_size ⇒
keyword ⇒
keyword ⇒
keyword ⇒
keyword ⇒
keyword ⇒
support_available ⇒
producer ⇒
end asset

a. Abstract Contents. Table 6-3 defines the data to be included in an abstract. The abstract contains free form text, so there is no specified size provided for the different data.

Table 6-3. Abstract Contents

DATA	DESCRIPTION	EXAMPLE
Asset Name	The asset name is the first line of the abstract.	Abstract for MIL-T-38804B Supplement DTD
Entity Name, Entity Text	The entity name and entity text of the entity DTD.	% m38804bsup PUBLIC "-// USA-DOD//DTD MIL-T-38804B SUPP//EN"
Description	The actual title (if applicable) and overview of the document corresponding to the asset name.	Preparation of Military Specification Time Compliance Technical Orders ——————-
Legal restrictions pertaining to the asset/service	This contains the distribution restrictions for the document and is placed at the end of the abstract.	Distribution Statement A: Approved for public release; distribution is approved for public release with unlimited distribution.

b. Sample Abstract. Figure 17, displays a sample abstract.

Abstract for MIL-T-38804B Supplement DTD

% m38804bsup PUBLIC "-//USA-DOD//DTD MIL-T-38804B SUPP//EN".

The DTD describes the SGML structure and content tagging conventions for MIL-T-38804B.

The following paragraph(s) describe the requirements for this manual.

This specification identifies the preparation requirements for Time Compliance Technical Orders (TCTO) manuals. TCTOs covered by this specification are used in accomplishing and providing a record of any one-time inspection, and replacement or installation of components, retrofit change or alteration to the design or construction of any aeronautical, non-aeronautical, Communication-Electronic (CE), air launched or surface launched missile, space vehicle systems or ground vehicles, their related equipment, sites, facilities, support systems and associated Aerospace Ground Equipment (AGE).

TCTOs may be used to announce each computer program change affecting weapon systems, automatic test equipment, simulator and on-board command and control systems utilizing digital computer systems.

Distribution Statement A. Approved for public release; distribution is approved for public release with unlimited distribution.

Figure 17 Sample Abstract

6.4.2.3 **Sample DTD.** The DTD for which registration is being requested must be included in the submission package. The following is a sample DTD.

```
<!--************** START OF FILE *******************-->
<!-- SUPPLEMENT NOTICE:  This file is made available to provide the user with
  a digital representation of the DTD found in Appendix B of MIL-T-38804B.
  This file is incomplete without MIL-T-38804B.-->
<!-- NOTE: The start and end of this file are marked with a row of asterisks.
   If these rows are not present the file may not be complete!-->
<!-- MIL-T-38804B Supplement DTD -->
<!-- The following set of declarations may be referred to by using a public
entity as follows:
<!ENTITY % m38804bsup PUBLIC "-//USA-DoD//DTD MIL-T-38804B SUPP//EN" >
%m38804bsup;-->
<!-- NOTE:  In order to parse the following DTD subset alone, append the
   following statement to the beginning of the file:
<!DOCTYPE docsupp {and the associated"}>" to the end of the file.-->
<!--ENTITY DECLARATION-->
%m38804b;
<!--****************** END OF FILE ************************-->
```

6.4.2.4 **DTD certification.** The submission package must contain a statement of certification, signed by the responsible authority from the submitting activity, that the candidate DTD meets all the submission criteria

and is in compliance with MIL-STD-2361(SC) and MIL-PRF-28001. The certification should identify the cognizant DoD organization certifying compliance. Figure 18 is an example of a DTD Certification.

DTD CERTIFICATION MEMORANDUM

TO:

FROM:

DATE:

The following Document Type Definition (DTD) is certified as in complete conformance with Army SGML Registry and Library (ASRL) submission criteria and MIL-PRF-28001, Markup Requirements and Generic Style Specification for Electronic Printed Output and Exchange of Text. DTD Title: In addition, the above DTD does not duplicate an existing DTD, nor contain elements, attributes, and attributes sets that have not been approved by the ASRL USAPA Registrar.

_____ Organization Certifying Authority

Figure 18 Sample DTD Certification

6.4.2.5 **Parse logs.** The submission package must contain parse logs (e.g., records of parsing) from at least three different ISO 8879–compliant parsers. It is recommended that one of the parsers be the SGMLS parser. SGMLS is public domain software and can be obtained through the ASRL at Uniform Resource Locator (URL): http://www.asrl.com. Figure 19 is an example of the first page of a parse report. If a parser does not produce a report, the submitter will provide the following information.

* Title of the parser
* Date parsed
* Name of person who executed the parser
* Any other pertinent information associated with this parsing (e.g., errors, warnings).

```
                    Datalogics Parser Log

                    SGML Document Type Definition Parser
                    Version 3.36
                    Copyright (c) Datalogics 1988,1989, 1990, 1991
                    SGML System Conforming to International Standard ISO 8879
                    Standard Generalized Markup Language

Log file:'804bb.LOG'

SDO File:'ctndecl.sdo' Namecase General is yes. Namecase Entity is no.

Parsing DTD file: '804bb.dtd'

Parsing DOCTYPE DOCSUPP DTDO144:   Attempt to declare Parameter Entity Name
                                   'supp' more than once denied. In declaration-
```

Figure 19 Sample Parse Log

6.4.3 **Delivery options.** Submission packages may be submitted on 3.5″ DOS formatted diskettes or via an Electronic Mail message to the ASRL Administrator. Each option is described below.

6.4.3.1 **Diskette delivery.** Submissions on disk require that the five parts be contained in five separate MS DOS ASCII files on a 3.5″ MS DOS formatted diskette. DTDs submitted by disk will share a common file name (where possible) for the first eight characters. Each part will have file name extensions as listed in Table 6-4.

Table 6-4. File Name Extensions

SUBMISSION PART	FILE NAME EXTENSION	EXAMPLE
DTD Information	.OTL	D0804BB0.OTL
DTD Abstract	.ABS	D0804BB0.ABS
DTD	.DTD	D0804BB0.DTD
Certification	.CRT	D0804BB0.CRT
Parse Log	.LOG	D0804BB0.LOG

Disk delivery will be made to the ASRL Administrator at the address below:

Director, USAPA
ATTN: JDHQSV-PAP-E
Hoffman Building 1
2461 Eisenhower Avenue
Alexandria, VA 22331

6.4.3.2 **Electronic Mail.** Submissions via E-Mail should be directed to the ASRL at asrl@monmouth.com. The submission must contain all five parts in one message. Each part will be delimited on a dedicated line as described in Table 6-5.

Table 6-5. Part Delimiters

SUBMISSION PART	PART DELIMITER
DTD Information	=====PART1
DTD Abstract	=====PART2
DTD	=====PART3
Certification	=====PART4
Parse Log	=====PART5

7. NOTES

7.1 **Intended use.** U. S. Army publications prepared in Standard Generalized Markup Language (SGML) in accordance with the information and guidance contained in this handbook is used for development of Army digital publications.

7.2 **Subject term (key word) listing.** The following terms are to be used to identify the MIL-HDBK-2361(AC) document during retrieval searches.

Publishing, Electronic
Standard Generalized Markup Language (SGML)
Document Type Definition (DTD)
Formatting Output Specification Instance (FOSI)
SGML objects and constructs
Equipment Publications
Work Package
Information Reuse
Digital Publications Development (DPD)
Army SGML Registry and Library (ASRL)
United States Army Publishing Agency (USAPA)
Electronic Delivery
Maintenance Instructions
Troubleshooting Instructions
Operator Instructions
Supporting Information
Theory of Operation
Administrative Publications
Training and Doctrine Publications
Formal Public Identifier (FPI)

SGML Tutorial

A.1 **Scope.** This appendix contains tutorial-type information on MIL-STD-2361(SC) SGML. The information contained in this version of the handbook is intended to provide a overview of the use of SGML.

A.2 **Applicable documents.** Refer to paragraph 2.

A.3 **Document Type Definition (DTD).** DTDs describe the structure and content of a document. A DTD is comprised of document elements and their relationships elements, attributes, entities, etc.

A.3.1 **Document elements.** Document elements begin with document element declarations. Element declarations may be identified in the DTD by the markup declaration open (MDO) "<!" and the reserved word "ELEMENT", which is always the first word in the element declaration. The next component of the element declaration is the element name ("deflist" in the example below). The element name is always followed by the OMITTAG rules which in MIL-STD-2361(SC) are: "- -" indicates an end tag is required; and "- o" indicates the end tag may be omitted (but does not have to be). The element declaration component following the OMITTAG rules is either declared content or a content model. Declared content is either "CDATA," "RCDATA," or "EMPTY." The MIL-STD-2361(SC) application makes use of the concept of "EMPTY" elements (for example the table of contents). The content model is comprised of two parts: the "model group" and any "exceptions." Sequence and occurrence indicators contained in the content model determine whether or not a sub-element will be in the document (see A.3.3) and in what order the sub-elements may occur. Exceptions are either "exclusions" (indicated by "-" prior to the left parenthesis) or "inclusions" (indicated by "+" prior to the left parenthesis) to the model group itself. If content model has both exclusions and inclusions, the exclusions are listed first. After the content model is completed the last component is the markup declaration close (MDC) ">". An example of an element declaration is as follows:

```
<!ELEMENT deflist - - (title?, (term, def)+) >
```

A.3.2 **Parsable Character Data #PCDATA.** The reserved name #PCDATA is used inside the content model to indicate zero or more parsed data characters. Note no information is required to be entered to maintain a valid document. #PCDATA contains the narrative (content) text for the document, non-keyboard character general entity and text general entity, but no subelements are allowed unless the current content model or higher-level permits inclusions.

A.3.3 **Sequence and occurrence indicators.** Sequence and occurrence indicators determine the required (mandatory) content and element groups for DTDs. Required content parameters include both the sequence and occurrence of elements within a DTD, and are identified within the DTD by standard SGML codes.

A.3.3.1 **Sequence indicators.** Sequence indicators determine how the elements are arranged within the document. Elements which will occur in a particular order are separated by comma's (,), such as the comma after "title?" in the example above. In this example, the "title?" of the definition list ("deflist") will precede "term and definition" (The "?" is an occurrence indicator that indicates the title is optional). Elements that have alternative relationships (e.g., use one but not the other), are designated by vertical bars (|), such as "(xref | extref)". Elements that will be included in the document, but in no particular order are indicated by the ampersand (&) such as "(name & date)" which means the name could be followed by the date or the date could be entered first and followed by the name.

A.3.3.2 **Occurrence indicators.** Occurrence indicators determine the number of times an element will occur in a document. An element that may or may not occur (e.g., optional) and that, if used, will occur only once, is designated by a question mark (?). An optional element that may occur zero or more times is designated by an asterisk (*). A mandatory element that will occur at least once, or that may occur many times, is designated by a plus sign (+). An element with no occurrence indicator is an mandatory element and must occur once only.

A.3.3.3 **Content model element sub-groups.** Element sub-groups within a content model are enclosed in parentheses. Inside the parentheses, individual elements are governed by the same sequence and occurrence indicators as other elements, creating a sequence/occurrence model within the sub-group. The entire sub-group is governed by the sequence indicator before the open parentheses and the occurrence indicator after the close parentheses. Examples of markup for various combinations of sequence, occurrence, and element sub-groups are provided below.

a. When elements are mandatory in sequence and occurrence: (name, xref) = <name> followed by an <xref>.

b. When elements have a mandatory sequence, but the occurrence of second element is optional: (name, xref?) = <name>, which may be followed by a single optional <xref>.

c. When elements have a mandatory sequence, occurrence of third element is optional: (name, xref, extref?) = <name> followed by one <xref>, which may be followed by an optional <extref>.

d. When elements have an optional sequence and occurrence: (name? | xref?) = either one <name> or one <xref> may occur but neither has to occur.

e. When elements have an optional sequence and occurrence: (name | xref)* = either a <name> or an <xref> may occur but neither has to occur; either or both of the tags may occur many times with no specified sequence; this model could be empty of content.

f. When elements have a mandatory sequence and occurrence, but with alternative second elements: (name, (xref | extref)) = <name> followed by either one <xref> or one <extref>.

g. When elements have a mandatory sequence and minimum occurrence requirements for the alternative second element: (name, (xref | extref)+) = <name> followed by at least one <xref> or <extref>; either or both the <extref> and <xref> can occur more than once, in no particular order.

h. When elements have a mandatory sequence but occurrence is required only for the first element: (name, (xref | extref)*) = <name>, which may be followed by an <xref> or <extref>; either or both the <xref> and <extref> can occur more than once, in no particular order, but neither has to occur.

i. When elements have a mandatory sequence but are modified by having no mandatory occurrences: (name*, (xref l extref)?) = <name> may occur any number of times, but is not mandatory, followed optionally by either a single <xref> or <extref>; this model could be empty of content.

A.3.4 **Attribute declaration.** Attribute declarations is prefaced in the DTDs by the (MDO) "<!" and the SGML reserved word "ATTLIST". The next component is the element to which the attributes apply ("ginfowp" in the example below). The element is followed by the attribute name ("wpno" in the example below). The attribute name is followed by the allowable attribute values ("CDATA" in the example below). The last part of the attribute declaration is the default value or value source keyword ("#REQUIRED" in the example below). The attribute name, value and declaration may have multiple attributes to better qualify the SGML element to which it is associated. The example, upon which the above descriptions are based, is as follows:

```
<!ATTLIST ginfowp wpno CDATA #REQUIRED>
```

A.3.4.1 **Attribute value types and reserved SGML names.** The attribute value types and reserved SGML names should be used in the context presented and should follow the rules contained in the definitions associated with the respective terms.

a. NAME - Will start with a letter and may be followed by letters, digits, period, and/or dash.

b. NMTOKEN - Will consist of either valid digits or letters.

c. NUMBER - Will consist only of digits (numbers). (Note: change signs and decimal numbers are not permitted)

NOTE: a special case in this application makes use of the reserved word NUMBER through an entity reference %yesorno;. It is meant to be used as a true-false test (hence the entity name) in which "O" implies "no" or "false" and "1" (or any non-zero number) implies "yes" or "true."

d. NUTOKEN - Will start with a number and may be followed by letters, digits, period, and/or dash.

e. CDATA - Free text that is not parsed internally.

f. ID - Unique identifier that may be referenced by the attribute with NAME value.

g. IDREF - Used to generate cross-references and to link elements, such as footnote text and foot note reference. The IDREF references the ID value.

h. ENTITY - Used to reference a general entity. The general entity must be declared to identify the data being declared. See A.3.5.3 on details using the graphic data type.

i. List - List of text values within parentheses usually, separated by "|" (the "or" indicator). Only one value will parse for each attribute instance and only values that are contained in the list are valid.

A.3.4.2 **Keyword attribute defaults.** The following keyword attribute defaults are used by MIL-STD-2361(SC).

a. #REQUIRED - Indicates that the value should be supplied in the instance.

b. #IMPLIED - Indicates that a value is not required to be included in the instance. #IMPLIED should be used when a system is expected to resolve the current attribute value, or when it would be difficult to supply a specific value for each attribute.

   1. In the MIL-STD-2361(SC) application, an example of the first case is the security attribute "security". When the parent element defines the "security" attribute, the system will imply the value for the attribute to be the same as the parent attribute, unless otherwise defined.

   2. In the MIL-STD-2361(SC) application, an example of the second case is the attribute list of cross reference (<xref>). Since the reference may be to a table (attribute "tableid IDREF #IMPLIED"), or a figure (attribute "figid IDREF #IMPLIED"), but never to both. Therefore, one cannot require any of these attributes be supplied. If the user does not supply an appropriate ID, the cross-reference will not be expressed.

c. #CURRENT - Indicates that the value must be supplied in the instance the first time it is encountered and assumes the specified value for subsequent occurrences (within the same element).

d. #CONREF - Indicates the attribute is a content reference attribute. If there is an entry for an attribute with #CONREF as its keyword default, the associated elements content model is considered to be "EMPTY."

e. Specified default value - When a value is supplied in the keyword attribute default, the system will use the value if no value is entered for the element. In the example below, the attribute "mark" has the default value of "ctr".

```
<!ATTLIST ftnoteref
          ftnoteid   ID           #REQUIRED
          mark       (ctr | mark) "ctr"
          label      CDATA        #IMPLIED>
```

A.3.5 **Entities.** There are two types of entity declarations: parameter and general.

A.3.5.1 **Parameter entity.** Parameter entities are often used as a short cut in the DTD in order to insert common DTD declaration data. Parameter entity declarations will be prefaced by the (MDO) "<!" and the SGML reserved word "ENTITY." The reserved word, ENTITY will be followed by at least one space, then a "%" followed by a space, followed by the entity name. When referenced, typically in a DTD, the entity name is preceded by the percent sign ("%") and followed by a semi-colon (";"). There is no space between the percent sign and the entity name when the entity is referenced.

A.3.5.1.1 **Replacement text entities.** Parameter entities can be used within the DTD to reference often used content such as:

```
<!ENTITY % titldtext "(title, (subtitle?, (para | specpara))+)">
```

Referenced as:

```
<!ELEMENT eqpdesc - o (%titldtext;)+>
```

Resolved as:

```
<!ELEMENT eqpdesc - o ((title, (subtitle?, (para | specpara))+))+>
```

A.3.5.1.2 **Nested entities.** Parameter entities may be nested. That is, one entity may occur within another entity declaration. In the example below, the entity %content; references %text; and %list. In essence, %text and %list; have been "nested" within %content:

NOTE

An entity being referenced must have been declared prior to its reference.

```
<!ENTITY % list "seqlist | randlist | deflist">
<!ENTITY % text "(#PCDATA | cageno | callout | change | ctrlind |
                 ctrlind-val | dwgname | dwgno| emphasis | emphterm |
                 extref | flghtsafe-part | ftnote | ftnref | indxref |
                 lubricant | modelno | name | nsn | null | pageloc |
                 partno | sc | simref | symbol | torque | tslocptr |
                 verbatim | voltage | xref)+">
<!ENTITY % content "(%text; | (%list;) | anchor | figure | graphic |
                     navref | note | table | tabmat)+">
```

A.3.5.1.3 **External files.** Parameter entities are also used to declare external files that may be referenced in the DTD. Once referenced, the content of that external file is then considered to be a part of the DTD being defined. External files may contain sets of "boilerplate" text that have been declared as general entities (see A.3.5.2), sets of graphic entities (see A.3.5.3), or ISO character sets (see A.3.5.4). The entity must be declared then referenced in the DTD. In the example below, %boilertxt; references the % boilertext entity which has given a name and location to an external file. The contents of that file "replaces" the entity reference to it.

```
<!ENTITY % boilertext PUBLIC " -//DA-USAPA//ENTITIES MIM BoilerPlate
                              REV 1.0 19970301//EN">
```

```
%boilertext;
```

NOTE

The boilerplate text entity described above contains numerous general entities that have already been defined in the MIL-STD-2361(SC) application. Some DTDs may declare all general entities directly within the document rather than making use of the parameter entity reference. (These entities may be referred to as direct entities).

A.3.5.2 **General entity.** General entities are frequently used to enter commonly used text into the narrative. Within the DTD, general entity declarations are prefaced by the (MDO) "<!" and the SGML reserved word ENTITY. The reserved word ENTITY will be followed by at least one space and the entity name. The entity name will be followed by at least one space and the text of the entity which is contained within quotation marks (typically double quotation marks are used; however single quotation marks may also be used and must be used if the text itself contains double quotations). When referenced in the document instance, the entity name is prefaced with an ampersand ("&") and followed by a semi-colon (";").

a. The general entity declaration in a DTD:

```
<!ENTITY siname "Driver's Night Vision Viewer">
```

b. The general entity used in a document instance:

```
If your &siname; needs improvement, let us know.
```

c. The resolved general entity:

```
If your Driver's Night Vision Viewer needs improvement, let us know.
```

A.3.5.2.1 **Replacement text entities.** General entities are defined for often used text or "boilerplate" text. For example, the warranty statement below may occur in numerous documents and should appear in the same wording. By defining it as a general entity in the DTD, users may reference the entity (&pmcs.warranty;) in the document instance without retyping and/or retagging the text.

```
<!ENTITY pmcs.warranty "<para> For equipment under manufacturer's warranty,
hardtime oil service intervals will be followed.  Intervals will be
shortened if lubricants are known to be contaminated or if operation is
under adverse conditions (such as longer-than-usual operating hours,
extended idling periods, extreme dust.)<para>">
```

A.3.5.2.2 **Nested entities.** General entities may be nested. In the MIL-STD-2361(SC) application, this concept is used to allow for customization for a specific document or document class. MIL-STD-2361(SC) DTDs, provide for use of nested entities to allow local revision of boilerplate text. In the example below, the entity eir.short.name needs to be changed to reflect the equipment short item name.

```
<!ENTITY eir.short.name "Replace text with equipment short item name">

<!ENTITY eir.state "<para> If your &eir.short.name; needs improvement, let us
know. Send us an EIR.  You, the user, are the only one who can tell us what
you don't like about your equipment.  Let us know why you don't like the
design or performance. Put it on an <extref docno='SF 368'
```

```
posttext=' (Product Quality Deficiency Report)'>. Mail it to the address
specified in <extref docno= 'DA PAM 738750' posttext=', Functional users
Manual for the Army Maintenance Management System (TAMMS)'>, or as specified
by the contracting activity.  We will send you a reply.<para>">
```

A.3.5.3 **Graphic entities.** Graphic entities will be declared through the use of entity templates for graphics. An external file, containing graphic declarations, will be included in each DTD as in the following example:

```
<!ENTITY % graph PUBLIC "-//'ENTER OWNER'//ENTITIES 'ENTER FORMAL
PUBLIC IDENTIFIER'//EN">
%graph;
```

In the example above, the external file should contain a set of graphic entity declarations needed for a given document instance. The external file contains a template to follow when naming the graphic.

```
<!ENTITY graph PUBLIC "-//'ENTER OWNER'//ENTITIES 'ENTER FORMAL
PUBLIC IDENTIFIER'//EN" NDATA 'ENTER GRAPHIC NOTATION'>
```

A.3.5.3.1 **SYSTEM vs. PUBLIC Identifier.** A SYSTEM identifier specifies the location of an external file in the particular system on which the document instance was developed. When the document instance is provided to another user, the document instance must be changed to identify the new location for the external files. A PUBLIC identifier specifies a unique name identifying the information. The formal public identifier (FPI) is mapped to the external file location. The mapping information is stored in a catalog (see Figure 20). When the document instance is provided to another user, the catalog is changed, but not the document instance. The preferred method for identifying the external files is PUBLIC.

```
PUBLIC "-//DA-USAPA//ENTITIES BFV Left Side 19971001//EN"
   "c:\graphics\bfvleft.cgm">
PUBLIC "-//DA-USAPA//ENTITIES BFV Right Side 19971001//EN"
   "c:\graphics\revised\bfvright.cgm">
```

Figure 20 Sample SGML Catalog

A.3.5.3.2 **Graphic entity key names.** Once a graphic entity is declared in a document, it will be referred to by its entity name. In a tagged document instance, the entity name will be used as the value of the graphic attribute "boardno". The key name will point to the Public Identifier of a specific graphic file.

A.3.5.3.3 **Exchanging graphic files.** When tagged documents are required to be exchanged with another (external) site, the graphic files will be converted to one of the following CALS graphic formats; Computer Graphic Metafile (CGM), Consultive Committee for International Telephone and Telegraph (CCITT) Group 4 facsimile (FAX), or Initial Graphics Exchange Specification IGES (IGES). The appropriate graphic notation type will be added to the graphic file entity declarations. "Graph" will represent the key name used in "boardno" and "NDATA" will be used as a reserved word for coding non-SGML data, such as graphic formats, as in the following example:

```
<!ENTITY graph PUBLIC "ENTER FORMAL PUBLIC IDENTIFIER" NDATA cgm
```

```
-- enter "cgm", " "fax," or "iges" here as appropriate -->
```

A.3.5.4 **ISO character sets.** ISO character entities will be used to insert non-keyboard characters, such as the plus/minus sign, in text. A general entity must be declared for the character and the replacement text is the appropriate text or coding that allows a given system to process the non-keyboard character. If the "minus-or-plus" sign has been defined as in the example below, ± may be used in the document instance to obtain the minus-or-plus sign when the document is processed.

```
<!ENTITY plusmn SDATA "[plusmn]"--/pm B: =plus-or-minus sign-->
```

In order to use ISO character sets the ISO character set files must be available to your system. ISO character set files are a series of entity declarations which may be referenced with an external entity declaration. SGML parsers can be used to resolve ISO entities to system-specific references to a character. The following ISO character sets are included in the MIL-STD-2361(SC) DTDs, and will be used when requirements call for their use.

```
<!ENTITY % ISOlat1 PUBLIC "ISO 8879-1986//ENTITIES Added Latin 1 //EN">
<!ENTITY % ISOpub PUBLIC "ISO 8879-1986//ENTITIES Publishing //EN">
<!ENTITY % ISOgrk3 PUBLIC "ISO 8879-1986//ENTITIES Greek Symbols //EN">
<!ENTITY % ISOnum PUBLIC "ISO 8879-1986//ENTITIES Numeric and Special
Graphic//EN">
<!ENTITY % ISOtech PUBLIC "ISO 8879-1986//ENTITIES General Technical//EN">
```

THIS PAGE INTENTIONALLY LEFT BLANK.

MIL-STD-2361(SC) SGML Applications Introduction

B.1 **Scope.** This appendix contains information on the presentation of the SGML elements developed for Army digital publications (equipment manuals, training publications, doctrinal publications, and administrative publications).

B.2 **Applicable documents.** Refer to paragraph 2.

B.3 **Introduction to MIL-STD-2361(SC) DTD Models.** In Appendix MIL-STD-2361(SC) GIM Chapter SGML Elements through Appendix O the MIL-STD-2361(SC) DTD content models will be displayed in the following manner:

a. The SGML element is defined as used in the particular Army publication.

b. A visual representation may be given of the SGML content model. The tree structure and its components are given to provide users an understanding of the relationships between the elements and the order of elements. The tree structure contains symbols defined in Figure 21.

c. A reproduction of the DTD fragment is provided for each element.

d. A description of associated attributes is provided for each element.

e. A sample document instance fragment is provided for some higher level elements. The fragmented instance shows a correct usage for the higher level element and its children.

f. When a sample document instance fragment is provided a sample output is included showing a facsimile of what is produced by a composition system.

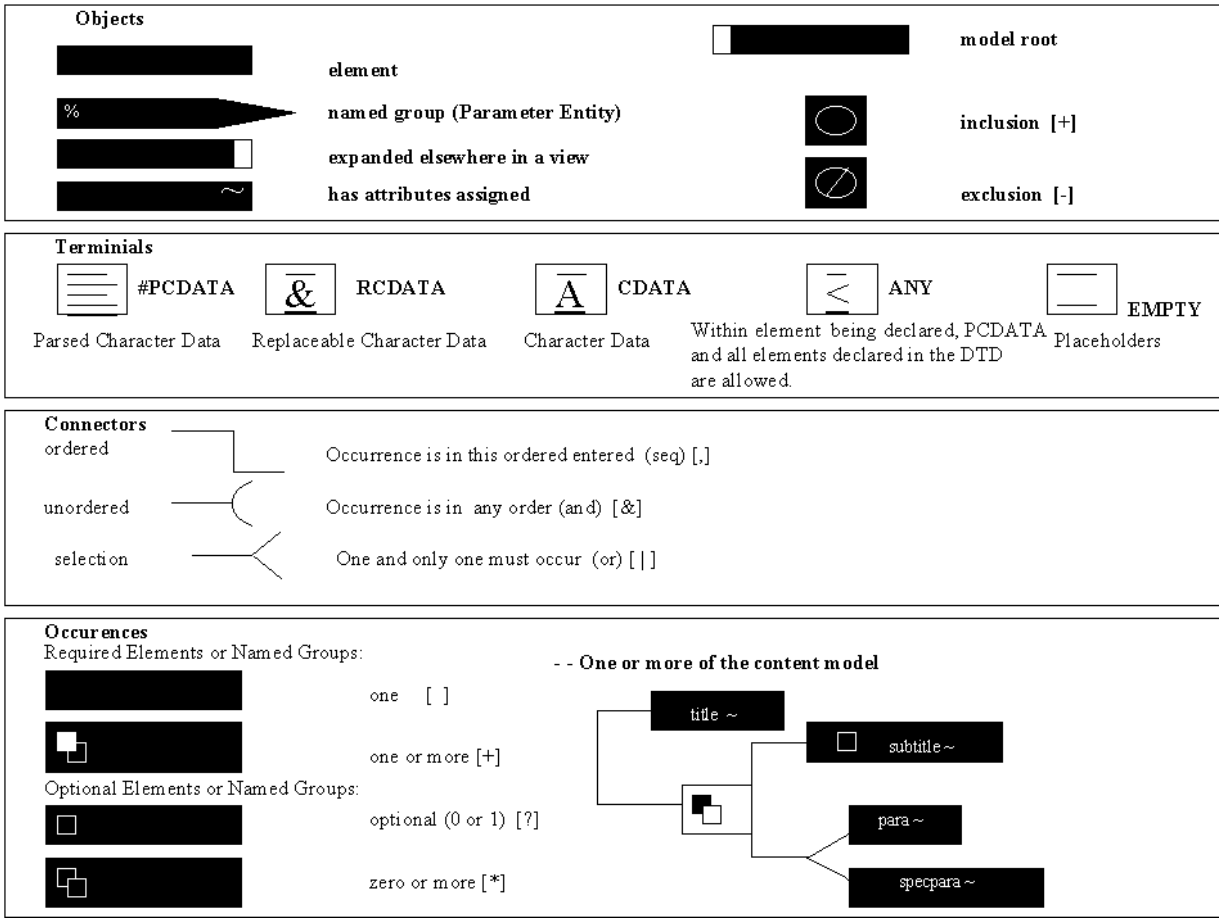

Figure 21 SGML Tree Legend

General Information with Theory of Operation

C.1 **Scope.** The following paragraphs give a description and use of the elements used in the MIL-STD-2361(SC) General Information Chapter DTD.

C.2 **Applicable documents.** Refer to paragraph 2.

C.3 **General Information with Theory of Operation Chapter <*gim*>.** The <***gim***> chapter must be prepared as a General Information Chapter. The chapter contains an optional title page (<***titlepg***> see L.4.5.16) and is then subdivided into work packages chosen from one of the following parameter entities: standard general information ***%stdgim;***, maintenance test flight general information ***%mtfgim;***, preventive maintenance services general information ***%pmsgim;*** and preventive maintenance inspections general information ***%pmigim;***.

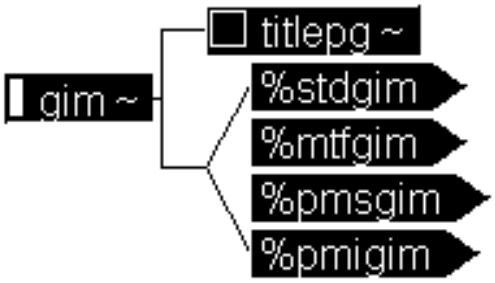

Figure 22 General Information Chapter

a. DTD fragment for <***gim***>:

```
<!ELEMENT gim - -   (titlepg?, (%stdgim; | %mtfgim; | %pmsgim; | %pmigim;)) >
<!ATTLIST gim
            tmno          CDATA                    #CURRENT
            tmlabel       CDATA                    #IMPLIED
            eic           CDATA                    #CURRENT
            imno          CDATA                    #REQUIRED
            imctrlabel    NUMBER                   #REQUIRED
            imlevel       (depot | operator |
                          gensup | dirsup |
                          unitlvl | inter |
                          avum-avim | tmlvls)     #REQUIRED
            syslevel      (enditem | func-system)  "enditem"
            system-title  CDATA                    #IMPLIED
            %imrsrc-vals;
            revno         NUMBER                   #REQUIRED
            chngno        NUMBER                   #REQUIRED
            date          CDATA                    #IMPLIED
            %refs;
            %secur;>
```

b. Attributes for ***<gim>***:

1. **TMNO** - The number of the current TM. The prefix TM must be included in the attribute value. The first time the attribute is referenced for the element it is treated as required, thereafter that it will assume the current attribute value.
2. **TMLABEL** - The number of the TM of which this information chapter (IM) was a part when originally created; this number remains the same throughout all versions of the IM.
3. **EIC** - The end-item code of the equipment covered in the TM of which this IM is a part. The first time the attribute is referenced for the element it is treated as required, thereafter that it will assume the current attribute value.
4. **IMNO** - Reserved for a unique identifying number of the information chapter, when and if such a numbering system is instituted; analogous to the attribute "WPNO" at the work package level.
5. **IMCTRLABEL** - A label giving the sequence number of the information chapter within this version of the TM; allows an individual IM to be composed with full numbering of pages and components.
6. **IMLEVEL** - The maintenance level of the information chapter.
   (a) “OPERATOR” - Applies to operator maintenance level.
   (b) “UNITLVL” - Applies to unit maintenance level.
   (c) “DIRSUP” - Applies to direct support (DS) maintenance level.
   (d) “GENSUP” - Applies to general support (GS) maintenance level.
   (e) “INTER” - Applies to intermediate (DS/GS) maintenance level.
   (f) “DEPOT” - Applies to depot maintenance level.
   (g) “AVUM-AVIM” - Applies to aviation unit (AVUM) and intermediate (AVIM) maintenance level.
   (h) “TMLVLS” - Applies to all maintenance levels.
7. **SYSLEVEL** - Specifies whether the chapter constituents cover the full end item ("ENDITEM") or a particular functional system ("FUNC-SYSTEM") within the end item. When the value is not entered for the attribute “SYSLEVEL”, the default value is “ENDITEM”.
8. **SYSTEM-TITLE** - If the attribute value of "SYSLEVEL" is "FUNC-SYSTEM," this attribute is used to identify the functional system which the chapter/work package covers.
9. **%IMRSRC-VALS;** - Refer to common parameter entities for a complete description (see L.5.7).
10. **REVNO** - The overall revision number for the information chapter.
11. **CHNGNO** - The overall change number for the information chapter.
12. **DATE** - The date of the current version of the chapter.
13. **%REFS;** - Refer to common parameter entities for a complete description (see L.5.2).
14. **%SECUR;** - Refer to common parameter entities for a complete description (see L.5.3).

C.3.1 **Standard General Information Chapter *%stdgim;*.** The Standard General Information Chapter consists of the general information work package ***<ginfowp>***, one or more equipment description work package ***<descwp>***, optional theory of operation work package(s) ***<thrywp>*** and an optional support data work package

for repair parts, special tools, Test Measurement & Diagnostic Equipment (TMDE) and support equipment <***supdatawp***>.

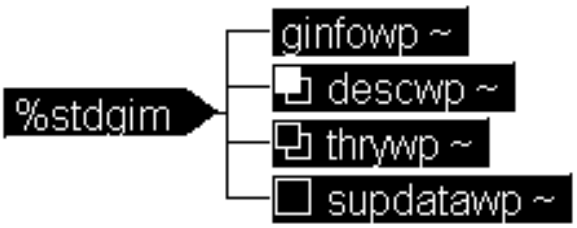

Figure 23 Standard General Information Chapter DTD Hierarchy

a. DTD fragment for ***%stdgim;***.

```
<!ENTITY % stdgim   "(ginfowp, descwp+, thrywp*, supdatawp?)">
```

C.3.1.1 **General Information Work Package <*ginfowp*>.** The general information work package <***ginfowp***> is subdivided into the following elements and content requirements:

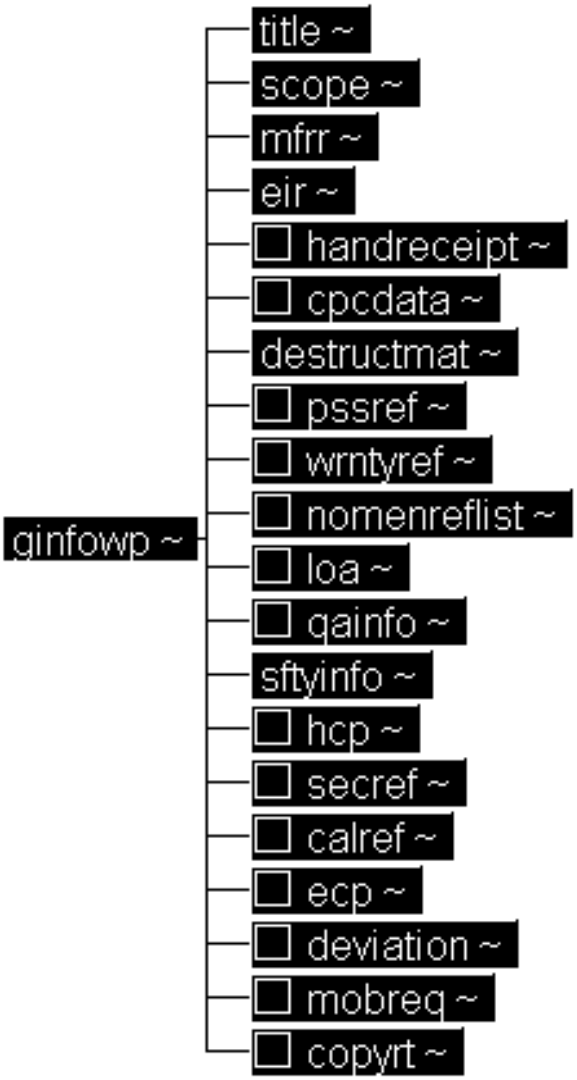

Figure 24 Standard General Information Work Package

a. DTD fragment for <***ginfowp***>:

```
<!ELEMENT ginfowp - - (title, scope, mfrr, eir, handreceipt?,
cpcdata?, destructmat, pssref?, wrntyref?, nomenreflist?, loa?,
qainfo?, sftyinfo, hcp?, secref?, calref?, ecp?, deviation?,
mobreq?, copyrt?) >
<!ATTLIST ginfowp
          wpno        ID         #REQUIRED
          %wprsrc-vals;
          %tracking;
```

```
%wpbodyatt;
%secur;>
```

b. Attributes for <***ginfowp***>:

1. **WPNO** - The unique number assigned to this work package by the original developer. This number remains the same when the work package is reused. The work package is referenced through an ID which is (#REQUIRED) and remains with the work package for the work package life. The FOSI generates the work package sequence number. Refer to MIL-STD-40051 Part 1 to obtain the work package number format.
2. **%WPRSRC-VALS;** - Refer to common parameter entities for a complete description (see L.5.5).
3. **%TRACKING;** - Refer to common parameter entities for a complete description (see L.5.6).
4. **%WPBODYATT;** - Refer to common parameter entities for a complete description (see L.5.4).
5. **%SECUR;** - Refer to common parameter entities for a complete description (see L.5.3).

c. SGML Document Instance Fragment:

```
<ginfowp wpno="G00001-9-2350-294" summary-detail="0">
<title><text>GENERAL INFORMATION</text></title>
<scope>
<para>
<figure>
<title><text>Left Front View</text></title>
<graphic boardno="ev0038"></figure>
<figure>
<title><text>Right Rear View</text></title>
<graphic boardno="ev0052"></figure>
</para>
<para>This manual tells how to operate and maintain the hulls of the M2A3
and M3A3.  <extref docno="TM 9-2350-294-10-2"> tells how to operate and
maintain the turret.
</para>
</scope>
<mfrr>
<para>Department of the Army forms and procedures used for equipment
maintenance will be those prescribed by<extref docno=" DA PAM 738-750">,
The Army Maintenance Management System (TAMMS).</para></mfrr>
<eir>
<para>If your vehicle needs improvement, let us know.  Send us an EIR.
You, the user, are the only one who can tell us what you don't like
about your equipment.  Let us know why you don't like the design.
Tell us why a procedure is hard to perform.  Put you ideas on an SF 368
(Quality Deficiency Report).  Mail it to us at:  Commander, US Army
Tank-Automotive Command, ATTN: AMSTA-QRT, Warren, MI 48397-5000.</
para></eir>
```

<*handreceipt*>
<*para*>Hand receipts for Components Of End Item (COEI), Basic Issue Items (BII), and Additional Authorization List (AAL) items are in <*extref docno="TM 9-2350-294-10-HR"*> This manual is to aid in property accountability and is available through: Director, USAPA, Distribution Operations Facility, JDHQSV-PAS, 1655 Woodson Ave., St. Louis, MO 63114--6181.</*para*></*handreceipt*>
<*destructmat*>
<*para*>The following manuals tell you how and when to destroy Army materiel to prevent enemy use:
<*randlist*>
<*item*><*extref docno="TM 750-244-2"*></*item*>
<*item*><*extref docno="TM 750-244-5-1"*></*item*>
<*item*><*extref docno="TM 750-244-6"*></*item*>
</*randlist*></*para*></*destructmat*>
<*nomenreflist*>
<*para*>This listing includes nomenclature cross references used in this manual.
<*deflist*>
<*term*>Brush guard</*term*><*def*><*para*>Duck core rubber sheet</*para*></*def*>
<*term*>CVC helmet</*term*><*def*><*para*>DH 132 helmet</*para*></*def*>
<*term*>Dipstick</*term*><*def*><*para*>Liquid measure gage rod</*para*></*def*>
<*term*>Firing port weapon</*term*><*def*><*para*>M231 5.56mm submachine gun</*para*></*def*>
<*term*>Hot box</*term*><*def*><*para*>25mm ammo container</*para*></*def*>
<*term*>Lock wire</*term*><*def*><*para*>Nonelectrical wire</*para*></*def*>
<*term*>MRE heater</*term*><*def*><*para*>Heater, water and ration</*para*></*def*>
<*term*>Surge tank</*term*><*def*><*para*>Tank radiator auxiliary</*para*></*def*>
<*term*>Squad headset</*term*><*def*><*para*>H-366/VRC headset</*para*></*def*>
<*term*>Starlight scope</*term*><*def*><*para*>Night vision sight, individual served weapons</*para*></*def*>
<*term*>Steering yoke</*term*><*def*><*para*>Steering wheel</*para*></*def*>
<*term*>TOW missile</*term*><*def*><*para*>Guided missile, surface attack, telemetry, BGM-71A, TOW</*para*></*def*>
</*deflist*>
</*para*></*nomenreflist*>
<*loa*>
<*para*>Many abbreviations are used in this manual. They are listed below. Learn what each one means. It will make your job easier.
<*deflist*>
<*term*>A</*term*><*def*><*para*>After</*para*></*def*>
<*term*>Ammo</*term*><*def*><*para*>Ammunition</*para*></*def*>
<*term*>AP</*term*><*def*><*para*>Armor Piercing</*para*></*def*>
<*term*>Assy</*term*><*def*><*para*>Assembly</*para*></*def*>

<term>AUTO</term><def><para>Automatic</para></def>
<term>B</term><def><para>Before</para></def>
<term>BELRF</term><def><para>Bradley Eyesafe Laser Range Finder</para></def>
<term>BO</term><def><para>Blackout</para></def>
<term>BRT</term><def><para>Bright</para></def>
<term>CAL</term><def><para>Calibration</para></def>
<term>CFV</term><def><para>Cavalry Fighting Vehicle</para></def>
<term>CKT BKR</term><def><para>Circuit Breaker</para></def>
<term>CVC</term><def><para>Combat Vehicle Communications</para></def>
<term>D</term><def><para>During</para></def>
<term>DCS</term><def><para>Digital Compass System (MV103AFV)</para></def>
<term>DEG</term><def><para>Degrees</para></def>
<term>DECLIN</term><def><para>Declination</para></def>
<term>Decontn Appar</term><def><para>Decontamination Apparatus</para></def>
<term>DISCH</term><def><para>Discharge</para></def>
<term>Flex hose</term><def><para>Flexible Hose</para></def>
<term>FWD</term><def><para>Forward</para></def>
<term>GPS</term><def><para>Global Positioning System</para></def>
<term>HE</term><def><para>High Explosive</para></def>
<term>Hex</term><def><para>Hexagonal, having six sides</para></def>
<term>HI-TEMP</term><def><para>High Temperature</para></def>
<term>ID PLATE</term><def><para>Identification Plate</para></def>
<term>IFV</term><def><para>Infantry Fighting Vehicle</para></def>
<term>INT</term><def><para>Internal</para></def>
<term>Intercom</term><def><para>Intercommunication</para></def>
<term>ITV</term><def><para>Improved TOW Vehicle</para></def>
<term>M</term><def><para>Monthly</para></def>
<term>MCD</term><def><para>Missile Countermeasure Device</para></def>
<term>MRE</term><def><para>Meal Ready to Eat</para></def>
<term>NAV</term><def><para>Navigation</para></def>
<term>NBC</term><def><para>Nuclear, Biological and Chemical</para></def>
<term>OVE</term><def><para>On Vehicle Equipment</para></def>
<term>PLGR</term><def><para>Precision Lightweight GPS Receiver</para></def>
<term>PMCS</term><def><para>Preventive Maintenance Checks and Services</
para></def>
<term>POL</term><def><para>Polarity</para></def>
<term>PRESS</term><def><para>Pressure</para></def>
<term>RAD</term><def><para>Radio</para></def>
<term>SER</term><def><para>Service</para></def>
<term>SET CRS</term><def><para>Set Course</para></def>
<term>TEC</term><def><para>Transmission Electronic Controller (HMPT
500-3EC)</para></def>
<term>TEMP</term><def><para>Temperature</para></def>
<term>TRANS</term><def><para>Transmission</para></def>

*<term>*TRK*</term><def><para>*Track*</para></def>*
*<term>*Vent*</term><def><para>*Ventilation*</para></def>*
*<term>*W*</term><def><para>*Weekly*</para></def>*
*<term>*XTE/ST*</term><def><para>*Cross Track Error/Steer-To*</para></def>*
</deflist></para></loa>
<sftyinfo>
<para><null></para>
</sftyinfo>
</ginfowp>

d. Sample FOSI Output:

TM 9-2350-294-10-1

GENERAL INFORMATION 0006 00

SCOPE

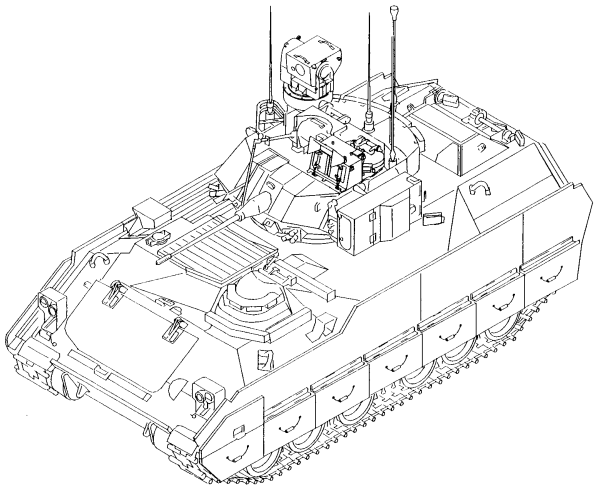

Left Front View

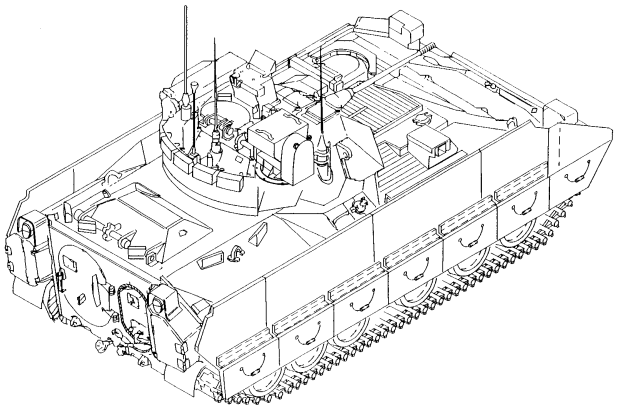

Right Rear View

This manual tells how to operate and maintain the hulls of the M2A3 and M3A3. TM 9-2350-294-10-2 tells how to operate and maintain the turret.

MAINTENANCE FORMS, RECORDS, AND REPORTS

Department of the Army forms and procedures used for equipment maintenance will be those prescribed by DA PAM 738-750, The Army Maintenance Management System (TAMMS).

REPORTING EQUIPMENT IMPROVEMENT RECOMMENDATIONS (EIR)

If your vehicle needs improvement, let us know. Send us an EIR. You, the user, are the only one who can tell us what you don't like about your equipment. Let us know why you don't like the design. Tell us why a procedure is hard to perform. Put

0006 00-1

Figure 25 Sample <ginfowp> FOSI Output

C.3.1.1.1 The element <***title***>(see L.4.1.5.1) defines the work package title.

C.3.1.1.2 The element <***scope***> is used for a brief statement of what is covered in the <***ginfowp***>. Refer to the common elements section for a complete description. (see L.4.5.15).

C.3.1.1.3 The element <***mfrr***> is used for references to Maintenance forms, records, and reports. The <***mfrr***> can contain one or more paragraph(s) (<***para***> see L.4.1.5.3). The paragraph(s) may be entered using an entity reference (see A.3.5.2) when the text of the paragraph(s) contains the verbatim statement found in MIL-STD-40051.

a. DTD fragment for <***mfrr***>:

```
<!ELEMENT mfrr - o (para+) >
<!ATTLIST mfrr
          %bodyatt;
          %secur;>
```

b. Attributes for <***mfrr***>:

1. **%BODYATT;** - Refer to common parameter entities for a complete description (see L.5.1).
2. **%SECUR;** - Refer to common parameter entities for a complete description (see L.5.3).

C.3.1.1.4 The element <***eir***> is used for reporting errors and recommending improvement data. A statement is included on how to report an equipment improvement recommendation. The <***eir***> element can contain one or more paragraph(s) (<***para***> see L.4.1.5.3). The paragraph(s) may be entered using an entity reference (see A.3.5.2) when the text of the paragraph(s) contains the verbatim statement found in MIL-STD-40051.

a. DTD fragment for <***eir***>:

```
<!ELEMENT eir   - o (para+) >
<!ATTLIST eir
          %bodyatt;
          %secur;>
```

b. Attributes for <***eir***>:

1. **%BODYATT;** - Refer to common parameter entities for a complete description (see L.5.1).
2. **%SECUR;** - Refer to common parameter entities for a complete description (see L.5.3).

C.3.1.1.5 The element <***handreceipt***> is used for identifying information about the hand receipt manual, that is a companion document to the work package. The <***handreceipt***> element can contain one or more paragraph(s) (<***para***> see L.4.1.5.3). The paragraph(s) may be entered using an entity reference (see A.3.5.2) when the text of the paragraph(s) contains the verbatim statement found in MIL-STD-40051.

a. DTD fragment for <***handreceipt***>:

```
<!ELEMENT handreceipt  - o (para+) >
<!ATTLIST handreceipt
          %bodyatt;
          %secur;>
```

b. Attributes for <***handreceipt***>:

1. **%BODYATT;** - Refer to common parameter entities for a complete description (see L.5.1).
2. **%SECUR;** - Refer to common parameter entities for a complete description (see L.5.3).

C.3.1.1.6 The corrosion prevention and control data element <***cpcdata***> is used for identifying the manner in which a corrosion problem is to be reported for specific maintenance tasks in a work package. The <***cpcdata***> element can contain one or more paragraph(s) (<***para***> see L.4.1.5.3). The paragraph(s) may be entered using an entity reference (see A.3.5.2) when the text of the paragraph(s) contains the verbatim statement found in MIL-STD-40051.

a. DTD fragment for <***cpcdata***>:

```
<!ELEMENT cpcdata - o (para+) >
<!ATTLIST cpcdata
          %bodyatt;
          %secur;>
```

b. Attributes for <***cpcdata***>:

1. **%BODYATT;** - Refer to common parameter entities for a complete description (see L.5.1).
2. **%SECUR;** - Refer to common parameter entities for a complete description (see L.5.3).

C.3.1.1.7 The destruction of army materiel to prevent enemy use element <***destructmat***>, is used for references to the appropriate TMs covering the destruction of Army materiel to prevent enemy use. The <***destructmat***> element can contain one or more paragraph(s) (<***para***> see L.4.1.5.3).

a. DTD fragment for <***destructmat***>:

```
<!ELEMENT destructmat - o (para+) >
<!ATTLIST destructmat
          %bodyatt;
          %secur;>
```

b. Attributes for <***destructmat***>:

1. **%BODYATT;** - Refer to common parameter entities for a complete description (see L.5.1).
2. **%SECUR;** - Refer to common parameter entities for a complete description (see L.5.3).

C.3.1.1.8 The preparation for storage or shipment references element <***pssref***> is used to identify information pertaining to the preparation for storage or shipment procedures, including packaging and administrative storage. The <***pssref***> element can contain one or more paragraph(s) (<***para***> see L.4.1.5.3).

a. DTD fragment for <***pssref***>:

```
<!ELEMENT pssref - o (para+) >
<!ATTLIST pssref
          %bodyatt;
          %secur;>
```

b. Attributes for <***pssref***>:

1. **%BODYATT;** - Refer to common parameter entities for a complete description (see L.5.1).

2. **%SECUR;** - Refer to common parameter entities for a complete description (see L.5.3).

C.3.1.1.9 The warranty reference element <***wrntyref***> is used for identifying data in the TM which covers equipment that is under warranty. The <***wrntyref***> element can contain one or more paragraph(s) (<***para***> see L.4.1.5.3). The paragraph(s) may be entered using an entity reference (see A.3.5.2) when the text of the paragraph(s) contains the verbatim statement found in MIL-STD-40051.

a. DTD fragment for <***wrntyref***>:

```
<!ELEMENT wrntyref - o (para+) >
<!ATTLIST wrntyref
          %bodyatt;
          %secur;>
```

b. Attributes for <***wrntyref***>:

1. **%BODYATT;** - Refer to common parameter entities for a complete description (see L.5.1).
2. **%SECUR;** - Refer to common parameter entities for a complete description (see L.5.3).

C.3.1.1.10 The nomenclature cross-reference list element <***nomenreflist***> is used to list any unofficial nomenclature approved by the contracting activity. This list is included in the nomenclature cross-reference list. The <***nomenreflist***> element can contain one or more paragraph(s) (<***para***> seeL.4.1.5.3).

a. DTD fragment for <***nomenreflist***>:

```
<!ELEMENT nomenreflist - o (para+) >
<!ATTLIST nomenreflist
          %bodyatt;
          %secur;>
```

b. Attributes for <***nomenreflist***>:

1. **%BODYATT;** - Refer to common parameter entities for a complete description (see L.5.1).
2. **%SECUR;** - Refer to common parameter entities for a complete description (see L.5.3).

C.3.1.1.11 The list of abbreviation/acronyms element <***loa***> is used to list all abbreviations, acronyms, signs, or symbols used in the TM. The <***loa***> element can contain one or more paragraphs (<***para***> see L.4.1.5.3).

a. DTD fragment for <***loa***>:

```
<!ELEMENT loa - o (para+) >
<!ATTLIST loa
          %bodyatt;
          %secur;>
```

b. Attributes for <***loa***>:

1. **%BODYATT;** - Refer to common parameter entities for a complete description (see L.5.1).
2. **%SECUR;** - Refer to common parameter entities for a complete description (see L.5.3).

C.3.1.1.12 The quality assurance information element <***qainfo***> is used to reference either a Quality Assurance technical manual or enter the appropriate general Quality Assurance information data. This element is used

in Depot and Aviation technical manual development only. The <***qainfo***> tag can contain one or more paragraph(s) (<***para***> see L.4.1.5.3).

a. DTD fragment for <***qainfo***>:

```
<!ELEMENT qainfo - o (para)+ >
<!ATTLIST qainfo
          %bodyatt;
          %secur;>
```

b. Attributes for <***qainfo***>:

1. **%BODYATT;** - Refer to common parameter entities for a complete description (see L.5.1).
2. **%SECUR;** - Refer to common parameter entities for a complete description (see L.5.3).

C.3.1.1.13 The safety, care, and handling information element <***sftyinfo***> is used for general safety precautions. Safety regulations are included for ammunitions TMs, equipment with radioactive parts or components, and electrical/electronic parts. The <***sftyinfo***> element can contain one or more paragraph(s) (<***para***> see L.4.1.5.3).

a. DTD fragment for <***sftyinfo***>:

```
<!ELEMENT sftyinfo - o (para+) >
<!ATTLIST sftyinfo
          %bodyatt;
          %secur;>
```

b. Attributes for <***sftyinfo***>:

1. **%BODYATT;** - Refer to common parameter entities for a complete description (see L.5.1).
2. **%SECUR;** - Refer to common parameter entities for a complete description (see L.5.3).

C.3.1.1.14 The nuclear hardness element <***hcp***> is used for equipment or any component which has nuclear hardness survivability requirements that must be identified. The <***hcp***> element can contain one or more paragraph(s) (<***para***> see L.4.1.5.3). The paragraph(s) may be entered using an entity reference (see A.3.5.2) when the text of the paragraph(s) contains the verbatim statement found in MIL-STD-40051.

a. DTD fragment for <***hcp***>:

```
<!ELEMENT hcp - o (para+) >
<!ATTLIST hcp
          %bodyatt;
          %secur;>
```

b. Attributes for <***hcp***>:

1. **%BODYATT;** - Refer to common parameter entities for a complete description (see L.5.1).
2. **%SECUR;** - Refer to common parameter entities for a complete description (see L.5.3).

C.3.1.1.15 The security measures for electronic data instructions element <***secref***> is used for data pertaining to handling, loading, scrubbing, overwriting, or unloading classified electronic data under usual or unusual conditions. The <***secref***> element can contain one or more paragraph(s) (<***para***> see L.4.1.5.3).

a. DTD fragment for <***secref***>:

```
<!ELEMENT secref - o (para+) >
<!ATTLIST secref
          %bodyatt;
          %secur;>
```

b. Attributes for <***secref***>:

1. **%BODYATT;** - Refer to common parameter entities for a complete description (see L.5.1).
2. **%SECUR;** - Refer to common parameter entities for a complete description (see L.5.3).

C.3.1.1.16 The calibration reference element <***calref***> is used to list all equipment requiring calibration. A reference to the publication containing the correct calibration procedure is made within the <***calref***> element. The <***calref***> element can contain one or more paragraph(s) (<***para***> see L.4.1.5.3).

a. DTD fragment for <***calref***>:

```
<!ELEMENT calref - o (para+) >
<!ATTLIST calref
          %bodyatt;
          %secur;>
```

b. Attributes for <***calref***>:

1. **%BODYATT;** - Refer to common parameter entities for a complete description (see L.5.1).
2. **%SECUR;** - Refer to common parameter entities for a complete description (see L.5.3).

C.3.1.1.17 The engineering change proposal element <***ecp***> is used for describing methods for submitting an engineering change proposal for equipment. The <***ecp***> statement is used in Depot Maintenance Manuals only. The <***ecp***> element can contain one or more paragraph(s) (<***para***> see L.4.1.5.3).

a. DTD fragment for <***ecp***>:

```
<!ELEMENT ecp - o (para+) >
<!ATTLIST ecp
          %bodyatt;
          %secur;>
```

b. Attributes for <***secref***>:

1. **%BODYATT;** - Refer to common parameter entities for a complete description (see L.5.1).
2. **%SECUR;** - Refer to common parameter entities for a complete description (see L.5.3).

C.3.1.1.18 The deviations and exceptions element <***deviation***> is used to describe the methods for requesting any deviations and/or exceptions to a Depot Maintenance Work Requirement (DMWR)s. The <***deviation***> statement is used in Depot Maintenance Manuals only. The element <***deviation***> can contain one or more paragraph(s) (<***para***> see L.4.1.5.3).

a. DTD fragment for <***deviation***>:

```
<!ELEMENT deviation - o (para+) >
<!ATTLIST deviation
          %bodyatt;
          %secur;>
```

b. Attributes for <***deviation***>:

1. **%BODYATT;** - Refer to common parameter entities for a complete description (see L.5.1).
2. **%SECUR;** - Refer to common parameter entities for a complete description (see L.5.3).

C.3.1.1.19 The mobilization requirements element <***mobreq***> is used for a brief statement regarding mobilization requirements. The <***mobreq***> statement is used in Depot Maintenance Manuals only. The <***mobreq***> element can contain one or more paragraph(s) (<***para***> see L.4.1.5.3).

a. DTD fragment for <***mobreq***>:

```
<!ELEMENT mobreq - o (para+)>
<!ATTLIST mobreq
          %bodyatt;
          %secur;>
```

b. Attributes for <***mobreq***>:

1. **%BODYATT;** - Refer to common parameter entities for a complete description (see L.5.1).
2. **%SECUR;** - Refer to common parameter entities for a complete description (see L.5.3).

C.3.1.1.20 The copyright information element <***copyrt***> is used for the copyright credit line included as the last paragraph in the general information work package. The <***copyrt***> element can contain one or more paragraph(s) (<***para***> see L.4.1.5.3).

a. DTD fragment for <***copyrt***>:

```
<!ELEMENT copyrt - o (para+) >
<!ATTLIST copyrt
          %bodyatt;
          %secur;>
```

b. Attributes for <***copyrt***>:

1. **%BODYATT;** - Refer to common parameter entities for a complete description (see L.5.1).
2. **%SECUR;** - Refer to common parameter entities for a complete description (see L.5.3).

C.3.1.2 **Equipment Description Work Package <*descwp*>.** Descriptive data requirements are entered in the equipment description and data work package <***descwp***>. There may be more than one equipment description and data work package in the general information chapter <***gim***>. The <***descwp***> contains a work package title (<***title***> see L.4.1.5.1), optional introductory information (<***geninfo***> see L.4.5.7) and is then subdivided into one or more uses of equipment characteristics, capabilities, and features <***eqpinfo***>, one or more uses of location and description of major components <***locdesc***>, an optional differences between models <***eqpdiff***>, an optional equipment data <***eqpdata***>, and one or more equipment configurations <***eqpconfig***>.

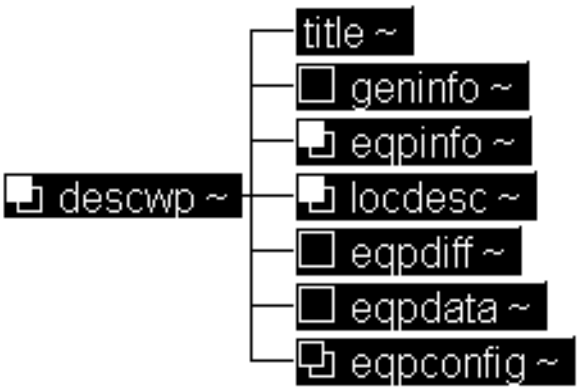

Figure 26 Equipment Description Work Package DTD Hierarchy

a. DTD fragment for <***descwp***>:

```
<!ELEMENT descwp - o (title, geninfo?, eqpinfo+, locdesc+, eqpdiff?,
                      eqpdata?, eqpconfig*)>
<!ATTLIST descwp
          wpno    ID        #REQUIRED
          eic     CDATA     #REQUIRED
          idmap   ENTITY    #IMPLIED
          %navlink;
          %wprsrc-vals;
          %tracking;
          %wpbodyatt;
          %secur;>
```

b. Attributes for <***descwp***>:

1. **WPNO** - The unique number assigned to this work package by the original developer. This number remains the same when the work package is reused. The work package is referenced through an ID which is (#REQUIRED) and remains with the work package for the work package life. The FOSI generates the work package sequence number. Refer to MIL-STD-40051 Part 1 to obtain the work package number format.
2. **EIC** - The end-item code of the equipment covered in the TM of which this work package is a part. The first time the attribute is referenced for the element it is treated as required, thereafter that it will assume the current attribute value.
3. **IDMAP** - The name of an entity containing a cross-reference table of IDs and IDREFs used in different versions of the work package identified by the attribute “WPNO”. This map is required when a work package is used in more than one technical with different sets of cross-referenced IDREFs. Use of this map is the responsibility of the application.
4. **%NAVLINK;** - Refer to common parameter entities for a complete description (see L.5.8).
5. **%WPRSRC-VALS;** - Refer to common parameter entities for a complete description (see L.5.5).

6. **%TRACKING;** - Refer to common parameter entities for a complete description (see L.5.6).
7. **%WPBODYATT;** - Refer to common parameter entities for a complete description (see L.5.4).
8. **%SECUR;** - Refer to common parameter entities for a complete description (see L.5.3).

C.3.1.2.1 The equipment characteristics, capabilities, and features element <***eqpinfo***> is used for descriptive data containing the overall description of the equipment. The element <***eqpinfo***> can contain one or more <***eqpdesc***> element.

a. DTD fragment for <***eqpinfo***>:

```
<!ELEMENT eqpinfo - o (eqpdesc+)>
<!ATTLIST eqpinfo
          %navlink;
          %bodyatt;
          %secur;>
```

b. Attributes for <***eqpinfo***>:

1. **%NAVLINK;** - Refer to common parameter entities for a complete description (see L.5.8).
2. **%BODYATT;** - Refer to common parameter entities for a complete description (see L.5.1).
3. **%SECUR;** - Refer to common parameter entities for a complete description (see L.5.3).

C.3.1.2.1.1 The equipment description element <***eqpdesc***> is used to describe the general capabilities and special unique features, as well as other similar information, that will be helpful in the operation and maintenance of equipment. The element <***eqpdesc***> contains paragraphs of text that may be grouped into sections or subsections (***%titldtext;*** see L.3.3).

a. DTD fragment for <***eqpdesc***>:

```
<!ELEMENT eqpdesc - o (%titldtext;)+>
<!ATTLIST eqpdesc
          %navlink;
          %nodeloc;
          %bodyatt;
          %secur;>
```

b. Attributes for <***eqpdesc***>:

1. **%NAVLINK;** - Refer to common parameter entities for a complete description (see L.5.8).
2. **%NODELOC;** - Refer to common parameter entities for a complete description (see L.5.9).
3. **%BODYATT;** - Refer to common parameter entities for a complete description (see L.5.1)..
4. **%SECUR;** - Refer to common parameter entities for a complete description (see L.5.3).

C.3.1.2.2 The location and description of major components element <***locdesc***> is used for descriptive data on the location and description of major components of the equipment in the work package. The element <***locdesc***> contains one or more component item <***comp-item***>. These may be preceded by introductory paragraphs (<***para***> see L.4.1.5.3) and/or paragraphs with required alert notices (<***specpara***> see L.4.1.1.1).

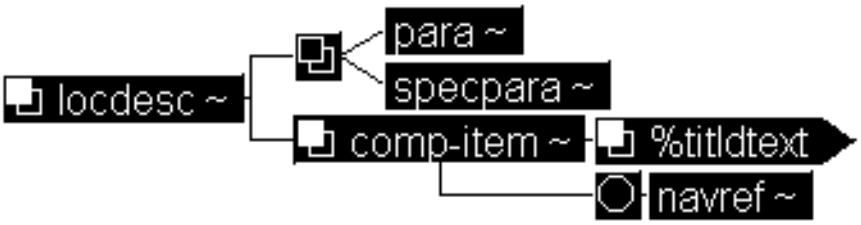

Figure 27 Location and Description of Major Components

a. DTD fragment for <***locdesc***>:

```
<!ELEMENT locdesc - o ((para |specpara)*, comp-item+)>
<!ATTLIST locdesc
          %navlink;
          %bodyatt;
          %secur;>
```

b. Attributes for <***locdesc***>:

1. **%NAVLINK;** - Refer to common parameter entities for a complete description (see L.5.8).
2. **%BODYATT;** - Refer to common parameter entities for a complete description (see L.5.1).
3. **%SECUR;** - Refer to common parameter entities for a complete description (see L.5.3).

C.3.1.2.2.1 The element <***comp-item***> is used for component item(s) under a major component of the equipment, which is covered in the location and description of equipment components. The element <***comp-item***> contains paragraphs of text that may be grouped into sections or subsections (***%titldtext;*** see L.3.3). In addition, a navigational reference (<***navref***> see L.4.7.10)may be entered within <***comp-item***>.

a. DTD fragment for <***comp-item***>:

```
<!ELEMENT comp-item - o (%titldtext;)+ +(navref)>
<!ATTLIST comp-item
          %navlink;
          %nodeloc;
          %bodyatt;
          %secur;>
```

b. Attributes for <***comp-item***>:

1. **%NAVLINK;** - Refer to common parameter entities for a complete description (see L.5.8).
2. **%NODELOC;** - Refer to common parameter entities for a complete description (see L.5.9).
3. **%BODYATT;** - Refer to common parameter entities for a complete description (see L.5.1).
4. **%SECUR;** - Refer to common parameter entities for a complete description (see L.5.3).

C.3.1.2.3 The differences between models element <***eqpdiff***> is used for descriptive data containing the significant differences between models or components. The element <***eqpdiff***> contains paragraphs of text that may be grouped into sections or subsections (***%titldtext;*** see L.3.3). In addition, a navigational reference (<***navref***> see L.4.7.10) may occur within element <***eqpdiff***>.

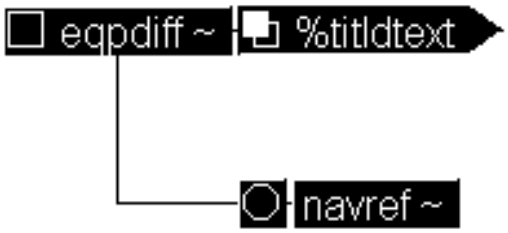

Figure 28 Differences Between Models

a. DTD fragment for <***eqpdiff***>:

```
<!ELEMENT eqpdiff - o (%titldtext;)+ +(navref)>
<!ATTLIST eqpdiff
          %navlink;
          %nodeloc;
          %bodyatt;
          %secur;>
```

b. Attributes for <***eqpdiff***>:

1. **%NAVLINK;** - Refer to common parameter entities for a complete description (see L.5.8).
2. **%NODELOC;** - Refer to common parameter entities for a complete description (see L.5.9).
3. **%BODYATT;** - Refer to common parameter entities for a complete description (see L.5.1).
4. **%SECUR;** - Refer to common parameter entities for a complete description (see L.5.3).

C.3.1.2.4 Equipment data <***eqpdata***> is used for descriptive data, which contains a listing of the major characteristics, dimensions, capabilities and limitations, and other critical data of the equipment that must be defined for the equipment user. The element <***eqpdata***> contains paragraphs of text that may be grouped into sections or subsections (***%titldtext;*** see L.3.3). In addition, a navigational reference (<***navref***> see L.4.7.10) may occur within element <***eqpdata***>.

a. DTD fragment for <***eqpdata***>:

```
<!ELEMENT eqpdata - o (%titldtext;)+ +(navref)>
<!ATTLIST eqpdata
          %navlink
          %nodeloc;
          %bodyatt;
          %secur;>
```

b. Attributes for <***eqpdata***>:

1. **%NAVLINK;** - Refer to common parameter entities for a complete description (see L.5.8).
2. **%NODELOC;** - Refer to common parameter entities for a complete description (see L.5.9).
3. **%BODYATT;** - Refer to common parameter entities for a complete description (see L.5.1).

4. **%SECUR;** - Refer to common parameter entities for a complete description (see L.5.3).

C.3.1.2.5 Equipment configurations <***eqpconfig***> is used when a piece of equipment can be configured in more than one way, information is included on each configuration. The element <***eqpconfig***> may contain specific equipment configuration(s) <***config***> which may be preceded by introductory paragraphs (<***para***> see L.4.1.5.3) and/or paragraphs with required alert notices (<***specpara***> see L.4.1.1.1).

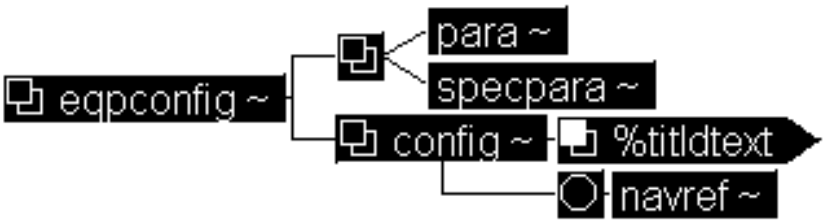

Figure 29 Equipment configurations

a. DTD fragment for <***eqpconfig***>:

```
<!ELEMENT eqpconfig - o ((para | specpara)*, config*) >
<!ATTLIST eqpconfig
          %navlink;
          %nodeloc;
          %bodyatt;
          %secur;>
```

b. Attributes for <***eqpconfig***>:

1. **%NAVLINK;** - Refer to common parameter entities for a complete description (see L.5.8).
2. **%NODELOC;** - Refer to common parameter entities for a complete description (see L.5.9).
3. **%BODYATT;** - Refer to common parameter entities for a complete description (see L.5.1).
4. **%SECUR;** - Refer to common parameter entities for a complete description (see L.5.3).

C.3.1.2.5.1 The element <***config***> is used for specific configuration(s) of each equipment configuration identified and described. The element <***config***> contains paragraphs of text that may be grouped into sections or subsections (***%titldtext;*** see L.3.3). In addition, a navigational reference (<***navref***> see L.4.7.10) may be entered within <***config***>.

a. DTD fragment for <***config***>:

```
<!ELEMENT config - o (%titldtext;)+ +(navref)>
<!ATTLIST config
          nomen  CDATA  #IMPLIED
          %navlink;
          %bodyatt;
          %secur;>
```

b. Attributes for <***config***>:

1. **%NAVLINK;** - Refer to common parameter entities for a complete description (see L.5.8).

2. **%BODYATT;** - Refer to common parameter entities for a complete description (see L.5.1).
3. **%SECUR;** - Refer to common parameter entities for a complete description (see L.5.3).

C.3.1.3 **Theory of Operation Work Package <*thrywp*>.** Identifies a theory of operation work package that contains a functional description on how the equipment and its components function and interface. The LSA/MAC dictates the level of detail presented in this work package and is subdivided into the following content requirements:

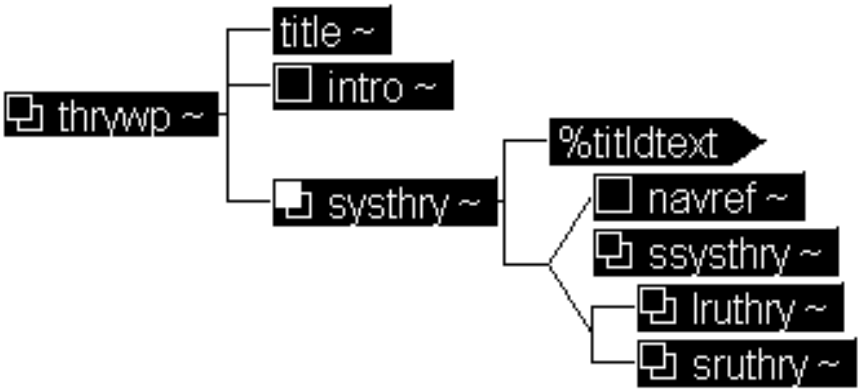

Figure 30 Theory of Operation Work Package DTD Hierarchy

a. DTD fragment for <*thrywp*>:

```
<!ELEMENT thrywp - o (title, intro?, systhry+) >
<!ATTLIST thrywp
          wpno     ID         #REQUIRED
          idmap    ENTITY     #IMPLIED
          eic      CDATA      #CURRENT
          %wprsrc-vals;
          %tracking;
          %wpbodyatt;
          %secur;>
```

b. Attributes for <*thrywp*>:

1. **WPNO** - The unique number assigned to this work package by the original developer. This number remains the same when the work package is reused. The work package is referenced through an ID which is (#REQUIRED) and remains with the work package for the work package life. The FOSI generates the work package sequence number. Refer to MIL-STD-40051 Part 1 to obtain the work package number format.
2. **IDMAP** - The name of an entity containing a cross-reference table of IDs and IDREFs used in different versions of the work package identified by the attribute “WPNO”. This map is required when a work package is used in more than one technical with different sets of cross-referenced IDREFs. Use of this map is the responsibility of the application.
3. **EIC** - The end-item code of the equipment covered in the TM of which this work package is a part. The first time the attribute is referenced for the element it is treated as required, thereafter that it will assume the current attribute value.

4. **%WPRSRC-VALS;** - Refer to common parameter entities for a complete description (see L.5.5).
5. **%TRACKING;** - Refer to common parameter entities for a complete description (see L.5.6).
6. **%WPBODYATT;** - Refer to common parameter entities for a complete description (see L.5.4).
7. **%SECUR;** - Refer to common parameter entities for a complete description (see L.5.3).

C.3.1.3.1 The element <***title***>(see L.4.1.5.1) defines the work package title.

C.3.1.3.2 The element <***intro***> (see L.4.5.8) is an introductory section for theory of operation work package.

C.3.1.3.3 The element <***systhry***> is used to identify a system's theory of operation. Theory of operation explains how the end item and its major systems work and interface in addition to the functional effect of switches, controls, and other devices. Subordinate sections on subsystem theory may be included. A simple system may only have one theory of operation work package whereas a large or complex system may contain system theory, subsystem theory, and component theory (LRU and/or SRU). The element <***systhry***> contains the introductory paragraphs of text that may be grouped into sections or subsections (***%titldtext;*** see L.3.3). Following the introductory section is an optional navigational reference (<***navref***> see L.4.7.10), multiple occurrences of subsystem theory (<***ssysthry***>), or multiple occurrences of line replaceable units' theory of operation (<***lruthry***>) which may be followed by multiple occurrences of shop replaceable units' theory of operation (<***sruthry***>).

a. DTD fragment for <***systhry***>:

```
<!ELEMENT systhry - o (%titldtext;, (navref? | ssysthry* | (lruthry*,
                        sruthry*))) >
<!ATTLIST systhry
          %navlink;
          %nodeloc;
          %bodyatt;
          %secur;>
```

b. Attributes for <***systhry***>:

1. **%NAVLINK;** - Refer to common parameter entities for a complete description (see L.5.8).
2. **%NODELOC;** - Refer to common parameter entities for a complete description (see L.5.9).
3. **%BODYATT;** - Refer to common parameter entities for a complete description (see L.5.1).
4. **%SECUR;** - Refer to common parameter entities for a complete description (see L.5.3).

C.3.1.3.3.1 The element <***ssysthry***> is used to identify a subsystem theory of operation in a complex system or multi-system equipment. It is used to divide the theory of operation into a subsystem breakdown. The element <***ssysthry***> contains either subsystem description which contains a subsystem title (<***title***> see L.4.1.5.1) followed by an optional subtitle(s) (<***subtitle***> see L.4.1.5.2) and paragraphs (<***para***> see L.4.1.5.3) and/or paragraphs with required alert notices (<***specpara***> see L.4.1.1.1), or LRU/SRU description which contains a subsystem title (<***title***> see L.4.1.5.1) followed by multiple occurrences of unit theory of operation (<***lruthry***> and/or <***sruthry***>), or a navigational reference (<***navref***> see L.4.7.10).

a. DTD fragment for <***ssysthry***>:

```
<!ELEMENT ssysthry - o (navref | (title, ((lruthry*, sruthry*) |
                        (subtitle?, (specpara | para))+)))>
<!ATTLIST ssysthry
          nomen    CDATA      #REQUIRED
          nsn      CDATA      #REQUIRED
          %navlink;
          %nodeloc;
          %bodyatt;
          %secur;>
```

b. Attributes for <***ssysthry***>:

1. **NOMEN** - Specifies the subsystem nomenclature.
2. **NSN** - Specifies the national stock number of the subsystem.
3. **%NAVLINK;** - Refer to common parameter entities for a complete description (see L.5.8).
4. **%NODELOC;** - Refer to common parameter entities for a complete description (see L.5.9).
5. **%BODYATT;** - Refer to common parameter entities for a complete description (see L.5.1).
6. **%SECUR;** - Refer to common parameter entities for a complete description (see L.5.3).

C.3.1.3.3.2 The element <***lruthry***> is used to identify line replaceable units' theory of operation. An LRU is a component or unit removed at the Unit or Organizational level. The element <***lruthry***> contains paragraphs of text that may be grouped into sections or subsections (***%titldtext;*** see L.3.3) or a navigational reference (<***navref***> see L.4.7.10).

a. DTD fragment for <***lruthry***>:

```
<!ELEMENT lruthry - o (navref | %titldtext; )>
<!ATTLIST lruthry
          nomen    CDATA      #REQUIRED
          nsn      CDATA      #REQUIRED
          %navlink;
          %nodeloc;
          %bodyatt;
          %secur;>
```

b. Attributes for <***lruthry***>:

1. **NOMEN** - Specifies the subsystem nomenclature.
2. **NSN** - Specifies the national stock number of the subsystem.
3. **%NAVLINK;** - Refer to common parameter entities for a complete description (see L.5.8).
4. **%NODELOC;** - Refer to common parameter entities for a complete description (see L.5.9).
5. **%BODYATT;** - Refer to common parameter entities for a complete description (see L.5.1).
6. **%SECUR;** - Refer to common parameter entities for a complete description (see L.5.3).

C.3.1.3.3.3 The element <***sruthry***> is used to identify shop replaceable units' theory of operation. An SRU is a component or unit that is authorized to be removed only at the repair shop. The element <***sruthry***> contains paragraphs of text that may be grouped into sections or subsections (***%titldtext;*** see L.3.3) or a navigational reference (<***navref***> see L.4.7.10).

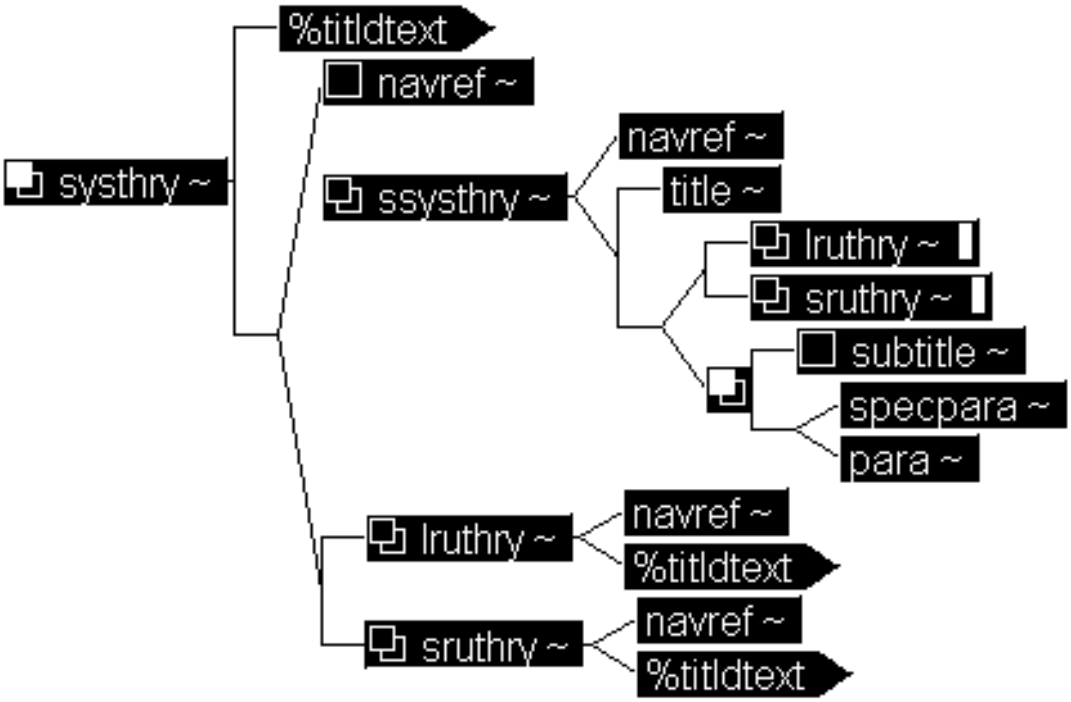

Figure 31 System Theory DTD Hierarchy

a. DTD fragment for <***sruthry***>:

```
<!ELEMENT sruthry - o (navref | %titldtext; )>
<!ATTLIST sruthry
          nomen    CDATA      #REQUIRED
          nsn      CDATA      #REQUIRED
          %navlink;
          %nodeloc;
          %bodyatt;
          %secur;>
```

b. Attributes for <***sruthry***>:

1. **NOMEN** - Specifies the subsystem nomenclature.
2. **NSN** - Specifies the national stock number of the subsystem.
3. **%NAVLINK;** - Refer to common parameter entities for a complete description (see L.5.8).
4. **%NODELOC;** - Refer to common parameter entities for a complete description (see L.5.9).
5. **%BODYATT;** - Refer to common parameter entities for a complete description (see L.5.1).
6. **%SECUR;** - Refer to common parameter entities for a complete description (see L.5.3).

C.3.1.4 **Support Data Work Package for Repair Parts, Special Tools, TMDE and Support Equipment <*supdatawp*>.** The supporting data work package includes references for common tools and equipment,

special tools, TMDE, and support equipment. The element <***supdatawp***> contains paragraphs of text that may be grouped into sections or subsections (***%titldtext;*** see L.3.3)

Figure 32 Support Data Work Package DTD Hierarchy

a. DTD fragment for <***supdatawp***>:

```
<!ELEMENT supdatawp - o (%titldtext;)+ >
<!ATTLIST supdatawp
          wpno      ID         #REQUIRED
          %wprsrc-vals;
          %tracking;
          %wpbodyatt;
          %secur;>
```

b. Attributes for <***supdatawp***>:

1. **WPNO** - The unique number assigned to this work package by the original developer. This number remains the same when the work package is reused. The work package is referenced through an ID which is (#REQUIRED) and remains with the work package for the work package life. The FOSI generates the work package sequence number. Refer to MIL-STD-40051 Part 1 to obtain the work package number format.
2. **%WPRSRC-VALS;** - Refer to common parameter entities for a complete description (see L.5.5).
3. **%TRACKING;** - Refer to common parameter entities for a complete description (see L.5.6).
4. **%WPBODYATT;** - Refer to common parameter entities for a complete description (see L.5.4).
5. **%SECUR;** - Refer to common parameter entities for a complete description (see L.5.3).

C.3.2 **Maintenance Test Flight General Information Chapter *%mtfgim;*.** This information chapter will be supplied in this handbook at a future release.

C.3.3 **Preventive Maintenance Services General Information Chapter *%pmsgim;*.** This information chapter will be supplied in this handbook at a future release.

C.3.4 **Preventive Maintenance Inspections General Information Chapter *%pmigim;*.** This information chapter will be supplied in this handbook at a future release.

THIS PAGE INTENTIONALLY LEFT BLANK.

Operators Instruction Information

D.1 **Scope.** The following paragraphs give a description and use of the elements used in the MIL-STD-2361(SC) Operators Instruction Information Chapter DTD.

D.2 **Applicable documents.** Refer to paragraph 2.

D.3 **Operators Instruction Information Chapter <*opim*>.** The <***opim***> chapter must be prepared as an Operators Instruction Information Chapter. The chapter contains an optional IETM login procedure (<***login***> see L.4.7.9), an optional title page (<***titlepg***> see L.4.5.16), either standard operating procedures which contains a controls and indicators work package <***ctrlindwp***>, operations under usual conditions work package(s) <***opusualwp***>, and operations under unusual conditions work package(s) <***opusualwp***>, or an aviation special and detailed procedure work package <***specprocwp***>. Volume separation (***%vol.group;*** see L.3.5) may occur any where in this element.

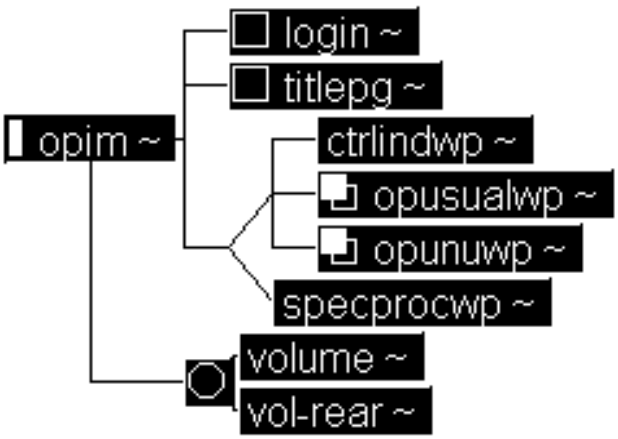

Figure 33 Operators Instruction Information DTD Hierarchy

a. DTD fragment for <***opim***>:

```
<!ELEMENT opim - - (login?, titlepg?, ((ctrlindwp, opusualwp+, opunuwp+)
                    | (specprocwp))) +(%vol.group;)>
<!ATTLIST opim
          tmno         CDATA   #CURRENT
          tmlabel      CDATA   #IMPLIED
          eic          CDATA   #CURRENT
          imno         CDATA   #REQUIRED
          imctrlabel   NUMBER  #REQUIRED
          %imrsrc-vals;
          revno        NUMBER  #REQUIRED
          chngno       NUMBER  #REQUIRED
          date         CDATA   #IMPLIED
          %refs;
          %secur;>
```

b. Attributes for <***opim***>:

1. **TMNO** - The number of the current TM. The prefix TM must be included in the attribute value. The first time the attribute is referenced for the element it is treated as required, thereafter that it will assume the current attribute value.
2. **TMLABEL** - The number of the TM of which this information chapter (IM) was a part when originally created; this number remains the same throughout all versions of the IM.
3. **EIC** - The end-item code of the equipment covered in the TM of which this IM is a part. The first time the attribute is referenced for the element it is treated as required, thereafter that it will assume the current attribute value.
4. **IMNO** - Reserved for a unique identifying number of the information chapter, when and if such a numbering system is instituted; analogous to the attribute "WPNO" at the work package level.
5. **IMCTRLABEL** - A label giving the sequence number of the information chapter within this version of the TM; allows an individual IM to be composed with full numbering of pages and components.
6. **%IMRSRC-VALS;** - Refer to common parameter entities for a complete description (see L.5.7).
7. **REVNO** - The overall revision number for the information chapter.
8. **CHNGNO** - The overall change number for the information chapter.
9. **DATE** - The date of the current version of the chapter.
10. **%REFS;** - Refer to common parameter entities for a complete description (see L.5.2).
11. **%SECUR;** - Refer to common parameter entities for a complete description (see L.5.3).

D.4 **Controls and Indicators Work Package <*ctrlindwp*>.** The element <***ctrlindwp***> contains the description and use of all system and equipment controls and indicators. The description may be presented in a standard table, as narrative text, or in a list.

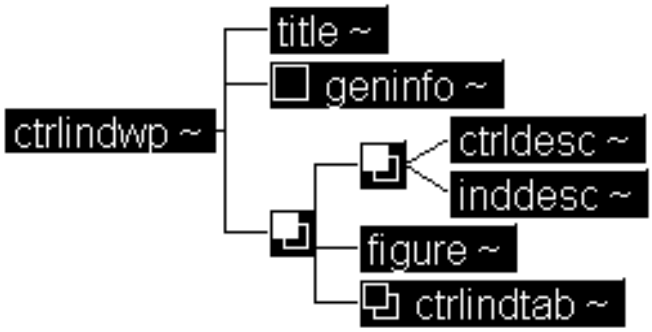

Figure 34 Controls and Indicators

a. DTD fragment for <***ctrlindwp***>:

```
<!ELEMENT ctrlindwp - - (title, geninfo?, ((ctrldesc | inddesc)+,
                         figure, ctrlindtab*)+)>
<!ATTLIST ctrlindwp
```

```
wpno    ID      #REQUIRED
%tracking;
%wpbodyatt;
%secur;>
```

b. Attributes for <***ctrlindwp***>:

1. **WPNO** - The unique number assigned to this work package by the original developer. This number remains the same when the work package is reused. The work package is referenced through an ID which is (#REQUIRED) and remains with the work package for the work package life. The FOSI generates the work package sequence number. Refer to MIL-STD-40051 Part 1 to obtain the work package number format.
2. **%TRACKING;** - Refer to common parameter entities for a complete description (see L.5.6).
3. **%WPBODYATT;** - Refer to common parameter entities for a complete description (see L.5.4).
4. **%SECUR;** - Refer to common parameter entities for a complete description (see L.5.3).

D.4.1 The element <***title***>(see L.4.1.5.1) defines the work package title.

D.4.2 The element <***geninfo***> (see L.4.5.7) is introductory information for the work package.

D.4.3 The element <***ctrldesc***> is used for providing a description of the controls for each equipment, assembly, or control panel. References to an illustration that shows the controls being described is also included within <***ctrldesc***>. The element <***ctrldesc***> contains the narrative about controls within paragraphs of text that may be grouped into sections or subsections (***%titldtext;*** see L.3.3).

a. DTD fragment for <***ctrldesc***> and <***inddesc***>:

```
!ELEMENT (ctrldesc | inddesc) - -  (%titldtext;)>
<!ATTLIST (ctrldesc | inddesc)
          %navlink;
          %refs;
          %secur;>
```

b. Attributes for <***ctrldesc***> and <***inddesc***>:

1. **%NAVLINK;** - Refer to common parameter entities for a complete description (see L.5.8).
2. **%REFS;** - Refer to common parameter entities for a complete description (see L.5.2).
3. **%SECUR;** - Refer to common parameter entities for a complete description (see L.5.3).

D.4.3.1 The element <***inddesc***> is used for providing a description of the indicators for each equipment, assembly, or control panel. References to an illustration that shows the indictors being described is also included within <***inddesc***>. The element <***inddesc***> contains the narrative about indicators within paragraphs of text that may be grouped into sections or subsections (***%titldtext;*** see L.3.3).

a. DTD fragment for <***inddesc***> : (see D.4.3 a.)

b. Attributes for <***inddesc***> : (see D.4.3 b.)

D.4.4 The element <***figure***> (see L.4.4.1) displays the equipment items being described in the <***ctrlindtab***>.

D.4.5 **Control/Indicator Table** <***ctrlindtab***>**..** The element <***ctrlindtab***> describes controls and indicator information in tabular form; table entries may reference an illustration that shows the controls and indicators.

There may be more than one table in the work package, usually related to each illustration in the work package. The title (<***title***> see L.4.1.5.1) of the table must be entered. A figure (<***figure***> see L.4.4.1) may occur prior to the set of controls and indicator rows in each <***ctrlindtab***> table. Any caution (<***caution***> see L.4.1.1.3) or notes (<***note***> see L.4.1.1.4) may be inserted in the control/indicator table.

a. DTD fragment for <***ctrlindtab***>:

```
<!ELEMENT ctrlindtab - - (title, (figure?, (ctrlrow | indrow)+)+)
                         +(caution | note)>
<!ATTLIST ctrlindtab
          %navlink;
          %refs;
          %secur;>
```

b. Attributes for <***ctrlindtab***>:

1. **%NAVLINK;** - Refer to common parameter entities for a complete description (see L.5.8).
2. **%REFS;** - Refer to common parameter entities for a complete description (see L.5.2).
3. **%SECUR;** - Refer to common parameter entities for a complete description (see L.5.3).

D.4.5.1 The elements <***ctrlrow***> identify a control information row. Equivalent to entering "row" in a structural table.

a. DTD fragment for <***ctrlrow***> and <***indrow***>:

```
<!ELEMENT (ctrlrow | indrow)  - - (key?, ctrlind, function)>
```

D.4.5.1.1 The element <***key***> identifies a key or callout that locates a control or indicator (***%text;***(see L.3.6) is available to enter inline formatting and contextual characteristics) shown on the related figure. If this element is used, it will appear in the first column of the table.

a. DTD fragment for <***key***> :

```
<!ELEMENT key - - %text;>
<!ATTLIST key
      applic  %yesorno;  #REQUIRED>
```

b. Attributes for <***key***>:

1. **APPLIC** – The models or versions of the equipment to which this table row applies. Used as navigation criteria.

D.4.5.1.2 The element <***ctrlind***> (see L.4.5.2) is used to enter control or indicator name. It will appear in the second column of the table if the <***key***> element has been used or in the first column of the table if the <***key***> element is not present.

D.4.5.1.3 The element <***function***> is used to specify the function of the controls and indicator specified (***%text;***(see L.3.6) is available to enter inline formatting and contextual characteristics). It will appear in the third column if the <***key***> element has been used or in the second column of the table if the <***key***> element is not present.

a. DTD fragment for <***function***> :

```
<!ELEMENT function - - (%text;)>
<!ATTLIST function
            %bodyatt;
            %secur;>
```

b. Attributes for <***function***>:

1. **%BODYATT;** - Refer to common parameter entities for a complete description (see L.5.1).
2. **%SECUR;** - Refer to common parameter entities for a complete description (see L.5.3).

D.4.5.2 The elements <***indrow***> identify a indicators row. Equivalent to entering "row" in a structural table.

a. DTD fragment for <***indrow***> : (see D.4.5.1 a.)

D.5 **Operation Under Usual Conditions Work Package <*opusualwp*>.** The operation under usual conditions work package contains step-by-step instructions for operation of the equipment and auxiliary equipment in all modes of operation under usual or normal conditions. There may be more than one <***opusualwp***> operating under usual conditions work package in the operating instructions information chapter.

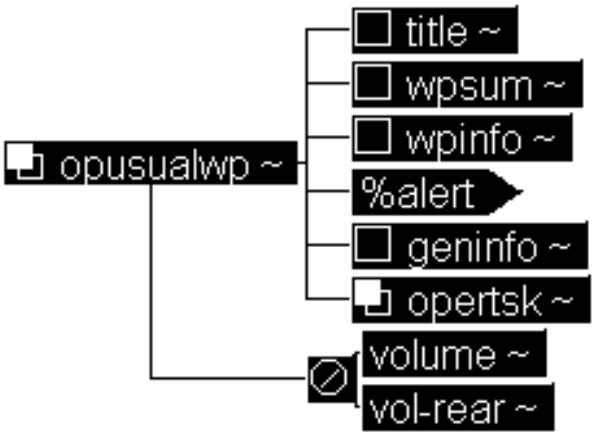

Figure 35 Operation Under Usual Conditions

a. DTD fragment for <***opusualwp***>:

```
<!ELEMENT opusualwp - - (title?, wpsum?, wpinfo?, %alert;, geninfo?,
                         opertsk+) -(%vol.group;)>
<!ATTLIST opusualwp
          wpno         ID      #REQUIRED
          crewmember   CDATA   #IMPLIED
          idmap        ENTITY  #IMPLIED
          %wprsrc-vals;
          %tracking;
          %navlink;
          %wpbodyatt;
```

```
%secur;>
```

b. Attributes for <***opusualwp***>:

1. **WPNO** - The unique number assigned to this work package by the original developer. This number remains the same when the work package is reused. The work package is referenced through an ID which is (#REQUIRED) and remains with the work package for the work package life. The FOSI generates the work package sequence number. Refer to MIL-STD-40051 Part 1 to obtain the work package number format.
2. **CREWMEMBER** - The crewmember(s) that should perform the tasks within this work package is specified.
3. **IDMAP** - The name of an entity containing a cross-reference table of IDs and IDREFs used in different versions of the work package identified by the attribute "WPNO". This map is required when a work package is used in more than one technical with different sets of cross-referenced IDREFs. Use of this map is the responsibility of the application.
4. **%WPRSRC-VALS;** - Refer to common parameter entities for a complete description (see L.5.5).
5. **%TRACKING;** - Refer to common parameter entities for a complete description (see L.5.6).
6. **%NAVLINK;** - Refer to common parameter entities for a complete description (see L.5.8).
7. **%WPBODYATT;** - Refer to common parameter entities for a complete description (see L.5.4).
8. **%SECUR;** - Refer to common parameter entities for a complete description (see L.5.3).

D.5.1 The element <***title***>(see L.4.1.5.1) defines the work package title.

D.5.2 The element <***wpsum***>(see L.4.6.1) summarizes the procedures in the work package. Refer to the common elements section for a complete description.(see L.4.6.1)-

D.5.3 The element <***wpinfo***>(see L.4.6.1) identifies the precondition requirements (tools, personnel, etc.) needed. Refer to the common elements section for a complete description.(see L.4.6.2)

D.5.4 The element <***geninfo***> (see L.4.5.7) is introductory information for the work package.

D.5.5 The parameter entity ***%alert;*** (see L.3.2) is the necessary alert notices.

D.5.6 The element <***opertsk***> operational tasks, describes all operational tasks <***site***>, <***shelter***>, <***assem***>, <***initial***>, <***oper***>, <***operaux***>, and <***prepmove***> required in the operations under usual conditions work package. A list of warnings <***warning***>(see L.4.1.1.2), cautions <***caution***>(see L.4.1.1.3), and/or notes <***note***>(see L.4.1.1.4) may precede the operational tasks.

a. DTD fragment for <***opertsk***>:

```
<!ELEMENT opertsk - - (warning*, caution*, note*, (site | shelter |
                        assem | initial | oper | operaux | prepmove)+)>
<!ATTLIST opertsk
          %navlink;
          %nodeloc;
          %bodyatt;
          %secur;>
```

b. Attributes for <***opertsk***>:

1. **%NAVLINK;** - Refer to common parameter entities for a complete description (see L.5.8)..
2. **%NODELOC;** - Refer to common parameter entities for a complete description (see L.5.9).
3. **%BODYATT;** - Refer to common parameter entities for a complete description (see L.5.1).
4. **%SECUR;** - Refer to common parameter entities for a complete description (see L.5.3).

D.5.6.1 The element <***site***> is used for operational task requirements that must be considered prior to siting. Overall site location, power sources, terrain requirements, and other similar considerations should be included within this element. This element includes a required title (<***title***> see L.4.1.5.1) followed by paragraphs (<***para***> see L.4.1.5.3) and/or procedures (<***proc***> see L.4.1.8.1).

a. DTD fragment for <***site***>:

```
<!ELEMENT site - - (title, (para | proc)+)>
<!ATTLIST site
          %navlink;
          %nodeloc;
          %bodyatt;
          %secur;>
```

b. Attributes for <***site***>:

1. **%NAVLINK;** - Refer to common parameter entities for a complete description (see L.5.8).
2. **%NODELOC;** - Refer to common parameter entities for a complete description (see L.5.9).
3. **%BODYATT;** - Refer to common parameter entities for a complete description (see L.5.1).
4. **%SECUR;** - Refer to common parameter entities for a complete description (see L.5.3).

D.5.6.2 The element <***shelter***> an operational task that specifies the shelter requirements for equipment normally housed in a permanent or semi-permanent shelter. Requirements for dimensions, or loading, layout, power or environmental conditions and other similar considerations. Does not apply to trucks, vans or transportable shelters. This element includes a required title (<***title***> see L.4.1.5.1) followed by paragraphs (<***para***> see L.4.1.5.3) and/or procedures (<***proc***> see L.4.1.8.1).

a. DTD fragment for <***shelter***>:

```
<!ELEMENT shelter - - (title, (para | proc)+)>
<!ATTLIST shelter
          %navlink;
          %nodeloc;
          %bodyatt;
          %secur;>
```

b. Attributes for <***shelter***>:

1. **%NAVLINK;** - Refer to common parameter entities for a complete description (see L.5.8).
2. **%NODELOC;** - Refer to common parameter entities for a complete description (see L.5.9).
3. **%BODYATT;** - Refer to common parameter entities for a complete description (see L.5.1).
4. **%SECUR;** - Refer to common parameter entities for a complete description (see L.5.3).

D.5.6.3 The element <***assem***> is an operational task that is used for items that have been disassembled or removed from an assembly, subassembly or component. This element includes one or more procedure (<***proc***> see L.4.1.8.1) each of which may be preceded by a figure (<***figure***> see L.4.4.1).

a. DTD fragment for <***assem***>:

```
<!ELEMENT assem - - (figure?, proc)+>
<!ATTLIST assem
          %navlink;
          %bodyatt;
          %secur;>
```

b. Attributes for <***assem***>:

1. **%NAVLINK;** - Refer to common parameter entities for a complete description (see L.5.8).
2. **%BODYATT;** - Refer to common parameter entities for a complete description (see L.5.1).
3. **%SECUR;** - Refer to common parameter entities for a complete description (see L.5.3).

D.5.6.4 The element <***initial***> is an operational task for specification of routine checks, self-test, or adjustments that the operator performs before putting equipment in operation. This element contains a required title (<***title***> see L.4.1.5.1), the alert notices (***%alert;*** see L.3.2) followed by paragraphs (<***para***> see L.4.1.5.3), paragraphs requiring alert notices (<***specpara***> see L.4.1.1.1) and or procedures (<***proc***> see L.4.1.8.1). In addition, information on instruction plates and decals <***instructplt***> may occur any where in this element.

a. DTD fragment for <***initial***>:

```
<!ELEMENT initial - - (title, %alert;, (para | specpara | proc)+)
                      +(instructplt)>
<!ATTLIST initial
          %navlink;
          %nodeloc;
          %bodyatt;
          %secur;>
```

b. Attributes for <***initial***>:

1. **%NAVLINK;** - Refer to common parameter entities for a complete description (see L.5.8).
2. **%NODELOC;** - Refer to common parameter entities for a complete description (see L.5.9).
3. **%BODYATT;** - Refer to common parameter entities for a complete description (see L.5.1).
4. **%SECUR;** - Refer to common parameter entities for a complete description (see L.5.3).

D.5.6.4.1 The element <***instructplt***> is used to specify the decals and instruction plates that are located on the equipment. This element includes one or more paragraph(s) (<***para***> see L.4.1.5.3) each of which may be preceded by a figure (<***figure***> see L.4.4.1).

a. DTD fragment for <***instructplt***>:

```
<!ELEMENT instructplt - - (figure, para*)>
<!ATTLIST instructplt
```

```
        %bodyatt;
        %secur;>
```

b. Attributes for <***instructplt***>:

1. **%BODYATT;** - Refer to common parameter entities for a complete description (see L.5.1).
2. **%SECUR;** - Refer to common parameter entities for a complete description (see L.5.3).

D.5.6.5 The element <***oper***> is an operational task containing all procedures to start the equipment, operate the equipment, place the equipment in standby, or shutdown the equipment. It also includes the operating procedure for auxiliary equipment required to operate or support the primary equipment. This element contains a required title (<***title***> see L.4.1.5.1), the alert notices (***%alert;*** see L.3.2) followed by paragraphs (<***para***> see L.4.1.5.3), paragraphs requiring alert notices (<***specpara***> see L.4.1.1.1) and or procedures (<***proc***> see L.4.1.8.1). In addition, information on instruction plates and decals <***instructplt***>(see D.5.6.4.1) may occur any where in this element.

a. DTD fragment for <***oper***>:

```
<!ELEMENT oper - - (title, %alert;, (para | specpara | proc)+) +(instructplt)>
<!ATTLIST oper
          %navlink;
          %nodeloc;
          %bodyatt;
          %secur;>
```

b. Attributes for <***oper***>:

1. **%NAVLINK;** - Refer to common parameter entities for a complete description (see L.5.8).
2. **%NODELOC;** - Refer to common parameter entities for a complete description (see L.5.9).
3. **%BODYATT;** - Refer to common parameter entities for a complete description (see L.5.1).
4. **%SECUR;** - Refer to common parameter entities for a complete description (see L.5.3).

D.5.6.6 The element <***operaux***> is an operational task containing procedures to start the auxiliary equipment, operate it, place it in standby or shutdown. If procedures are in another TM, this paragraph may make reference to that TM for operating procedures. This element includes a required title (<***title***> see L.4.1.5.1) followed by paragraphs (<***para***> see L.4.1.5.3) and/or procedures (<***proc***> see L.4.1.8.1). In addition, information on instruction plates and decals <***instructplt***>(see D.5.6.4.1) may occur any where in this element.

a. DTD fragment for <***operaux***>:

```
<!ELEMENT operaux - - (title, (para | proc)+) +(instructplt)>
<!ATTLIST operaux
          %navlink;
          %nodeloc;
          %bodyatt;
          %secur;>
```

b. Attributes for <***operaux***>:

1. **%NAVLINK;** - Refer to common parameter entities for a complete description (see L.5.8).

2. **%NODELOC;** - Refer to common parameter entities for a complete description (see L.5.9).
3. **%BODYATT;** - Refer to common parameter entities for a complete description (see L.5.1).
4. **%SECUR;** - Refer to common parameter entities for a complete description (see L.5.3).

D.5.6.7 The element <***prepmove***> is an operational task containing procedures for preparing the equipment if required to move. This element includes a required title (<***title***> see L.4.1.5.1) followed by paragraphs (<***para***> see L.4.1.5.3) and/or procedures (<***proc***> see L.4.1.8.1). In addition, information on instruction plates and decals <***instructplt***>(see D.5.6.4.1) may occur any where in this element.

a. DTD fragment for <***prepmove***>:

```
<!ELEMENT prepmove - - (title, (para | proc)+)>
<!ATTLIST prepmove
          %navlink;
          %nodeloc;
          %bodyatt;
          %secur;>
```

b. Attributes for <***prepmove***>:

1. **%NAVLINK;** - Refer to common parameter entities for a complete description (see L.5.8).
2. **%NODELOC;** - Refer to common parameter entities for a complete description (see L.5.9).
3. **%BODYATT;** - Refer to common parameter entities for a complete description (see L.5.1).
4. **%SECUR;** - Refer to common parameter entities for a complete description (see L.5.3).

D.6 **Operation Under Unusual Conditions Work Package <*opunuwp*>.** The element <***opunuwp***> operating under unusual conditions work package contains step-by-step instructions for operation of the equipment and auxiliary equipment in all modes of operation under unusual conditions. There may be more than one operating under unusual conditions work package in the operating instructions information chapter.

NOTE

Operations under unusual tasks <*opunutsk*> MUST be in a separate work package than any emergency procedures <*emergency*>.

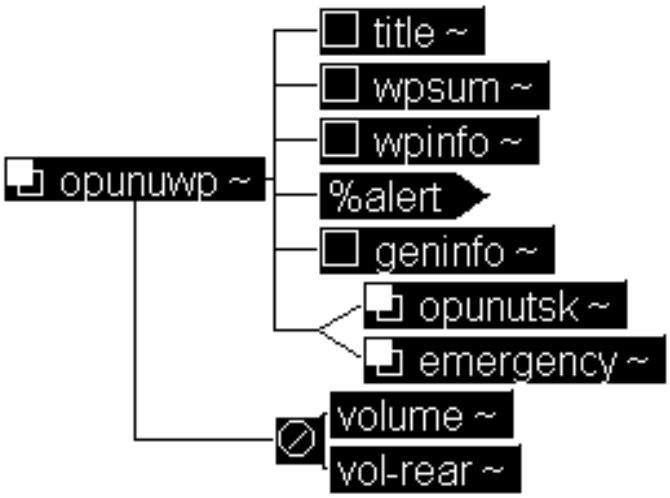

Figure 36 Operation Under Unusual Conditions

a. DTD fragment for <***opunuwp***>:

```
<!ELEMENT opunuwp - - (title?, wpsum?, wpinfo?, %alert;, geninfo?,
                       (opunutsk+ | emergency+)) -(%vol.group;)>
<!ATTLIST opunuwp
          wpno          ID      #REQUIRED
          crewmember    CDATA   #IMPLIED
          idmap         ENTITY  #IMPLIED
          %wprsrc-vals;
          %tracking;
          %navlink;
          %wpbodyatt;
          %secur;>
```

b. Attributes for <***opunuwp***>:

1. **WPNO** - The unique number assigned to this work package by the original developer. This number remains the same when the work package is reused. The work package is referenced through an ID which is (#REQUIRED) and remains with the work package for the work package life. The FOSI generates the work package sequence number. Refer to MIL-STD-40051 Part 1 to obtain the work package number format.
2. **CREWMEMBER** - The crewmember(s) that should perform the tasks within this work package is specified.
3. **IDMAP** - The name of an entity containing a cross-reference table of IDs and IDREFs used in different versions of the work package identified by the attribute “WPNO”. This map is required when a work package is used in more than one technical with different sets of cross-referenced IDREFs. Use of this map is the responsibility of the application.
4. **%WPRSRC-VALS;** - Refer to common parameter entities for a complete description (see L.5.5).

5. **%TRACKING;** - Refer to common parameter entities for a complete description (see L.5.6).
6. **%WPBODYATT;** - Refer to common parameter entities for a complete description (see L.5.4).
7. **%SECUR;** - Refer to common parameter entities for a complete description (see L.5.3).

D.6.1 The element <***title***>(see L.4.1.5.1) defines the work package title.

D.6.2 The element <***wpsum***>(see L.4.6.1) summarizes the procedures in the work package. Refer to the common elements section for a complete description.(see L.4.6.1)

D.6.3 The element <***wpinfo***>(see L.4.6.1) identifies the precondition requirements (tools, personnel, etc.) needed. Refer to the common elements section for a complete description.(see L.4.6.2)

D.6.4 The parameter entity ***%alert;*** (see L.3.2) is the necessary alert notices.

D.6.5 The element <***geninfo***> (see L.4.5.7) is introductory information.

D.6.6 The element <***opunutsk***> unusual operational tasks, describes all unusual operational tasks <***unusualenv***>, <***fording***>, <***decon***>, and <***ecm***> required in the operations under unusual conditions work package. An optional initial setup formation (<***wpinfo***> see L.4.6.2) and a list of warnings (<***warning***> see L.4.1.1.2), cautions (<***caution***> see L.4.1.1.3), and/or notes (<***note***> see L.4.1.1.4) may precede the unusual operational tasks.

a. DTD fragment for <***opunutsk***>:

```
<!ELEMENT opunutsk - - (wpinfo?, warning*, caution*, note*, (unusualenv
                        | fording | decon | ecm)+)>
<!ATTLIST opunutsk
          %navlink;
          %nodeloc;
          %bodyatt;
          %secur;>
```

b. Attributes for <***opunutsk***>:

1. **%NAVLINK;** - Refer to common parameter entities for a complete description (see L.5.8).
2. **%NODELOC;** - Refer to common parameter entities for a complete description (see L.5.9).
3. **%BODYATT;** - Refer to common parameter entities for a complete description (see L.5.1).
4. **%SECUR;** - Refer to common parameter entities for a complete description (see L.5.3).

D.6.6.1 The element <***unusualenv***> is an unusual conditions operational task containing procedures for operating the equipment in unusual environment/weather conditions such as extreme heat or cold, sea spray, dust storm, snow, mud, or similar conditions. This element includes a required title (<***title***> see L.4.1.5.1) followed by paragraphs (<***para***> see L.4.1.5.3) and/or procedures (<***proc***> see L.4.1.8.1).

a. DTD fragment for <***unusualenv***>:

```
<!ELEMENT unusualenv - - (title, (para | proc)+) >
<!ATTLIST unusualenv
          %navlink;
```

```
        %nodeloc;
        %bodyatt;
        %secur;>
```

b. Attributes for <***unusualenv***>:

1. **%NAVLINK;** - Refer to common parameter entities for a complete description (see L.5.8).
2. **%NODELOC;** - Refer to common parameter entities for a complete description (see L.5.9).
3. **%BODYATT;** - Refer to common parameter entities for a complete description (see L.5.1).
4. **%SECUR;** - Refer to common parameter entities for a complete description (see L.5.3).

D.6.6.2 The element <***fording***> is an unusual conditions operational task containing the procedures required before, during and after fording and swimming the equipment. This element includes a required title (<***title***> see L.4.1.5.1) followed by paragraphs (<***para***> see L.4.1.5.3) and/or procedures (<***proc***> see L.4.1.8.1).

a. DTD fragment for <***fording***>:

```
<!ELEMENT fording - - (title, (para | proc)+)>
<!ATTLIST fording
        %navlink;
        %nodeloc;
        %bodyatt;
        %secur;>
```

b. Attributes for <***fording***>:

1. **%NAVLINK;** - Refer to common parameter entities for a complete description (see L.5.8).
2. **%NODELOC;** - Refer to common parameter entities for a complete description (see L.5.9).
3. **%BODYATT;** - Refer to common parameter entities for a complete description (see L.5.1).
4. **%SECUR;** - Refer to common parameter entities for a complete description (see L.5.3).

D.6.6.3 The element <***decon***> is an unusual conditions operational task containing procedures for interim nuclear, biological and chemical (NBC) decontamination; used for NBC decontamination of equipment when a normal decontamination facility is not available. This element includes a required title (<***title***> see L.4.1.5.1) followed by paragraphs (<***para***> see L.4.1.5.3) and/or procedures (<***proc***> see L.4.1.8.1).

a. DTD fragment for <***decon***>:

```
<!ELEMENT decon - - (title, (para | proc)+)>
<!ATTLIST decon
        %navlink;
        %nodeloc;
        %bodyatt;
        %secur;>
```

b. Attributes for <***decon***>:

1. **%NAVLINK;** - Refer to common parameter entities for a complete description (see L.5.8).
2. **%NODELOC;** - Refer to common parameter entities for a complete description (see L.5.9).

3. **%BODYATT;** - Refer to common parameter entities for a complete description (see L.5.1).
4. **%SECUR;** - Refer to common parameter entities for a complete description (see L.5.3).

D.6.6.4 The element <***ecm***> is an unusual conditions operational task containing countermeasure procedures for operation of equipment in an ECM environment through transmitted and reflected deception signals and jamming. This element includes a required title (<***title***> see L.4.1.5.1) followed by paragraphs (<***para***> see L.4.1.5.3) and/or procedures (<***proc***> see L.4.1.8.1).

a. DTD fragment for <***ecm***>:

```
<!ELEMENT ecm - - (title, (para | proc)+)>
<!ATTLIST ecm
          %navlink;
          %nodeloc;
          %bodyatt;
          %secur;>
```

b. Attributes for <***ecm***>:

1. **%NAVLINK;** - Refer to common parameter entities for a complete description (see L.5.8).
2. **%NODELOC;** - Refer to common parameter entities for a complete description (see L.5.9).
3. **%BODYATT;** - Refer to common parameter entities for a complete description (see L.5.1).
4. **%SECUR;** - Refer to common parameter entities for a complete description (see L.5.3).

D.6.7 Emergency operational procedures <***emergency***> is used for data content in a safety supplementary for aviation manuals and for the <***emergency***> procedures for temporarily adapting the equipment when a component or part of the equipment has failed or a power reduction or some similar condition exists and continued operation of the equipment is required. This element includes a required title (<***title***> see L.4.1.5.1) followed by paragraphs (<***para***> see L.4.1.5.3) and/or procedures (<***proc***> see L.4.1.8.1).

a. DTD fragment for <***emergency***>:

```
<!ELEMENT emergency - - (title, (para | proc)+)>
<!ATTLIST emergency
          %navlink;
          %nodeloc;
          %bodyatt;
          %secur;>
```

b. Attributes for <***emergency***>:

1. **%NAVLINK;** - Refer to common parameter entities for a complete description (see L.5.8).
2. **%NODELOC;** - Refer to common parameter entities for a complete description (see L.5.9).
3. **%BODYATT;** - Refer to common parameter entities for a complete description (see L.5.1).
4. **%SECUR;** - Refer to common parameter entities for a complete description (see L.5.3).

D.7 **Special and Detailed Procedures Work Package <*specprocwp*>.** The element <***specprocwp***> is used for special and detailed procedures work package procedures referenced in the Maintenance Test Flight

Checklist. The content model <***specprocwp***> contains a required work package title (<***title***> see L.4.1.5.1), which may be followed by introductory information (<***geninfo***> see L.4.5.7), followed by at least one special procedure <***specialproc***>.

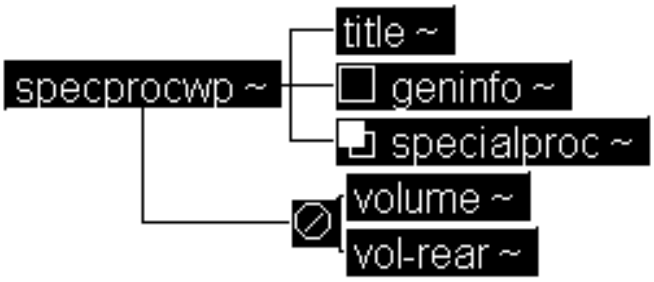

Figure 37 Special and Detailed Procedures Work Package

a. DTD fragment for <***specprocwp***>:

```
<!ELEMENT specprocwp - - (title, geninfo?, specialproc+) -(%vol.group;)>
<!ATTLIST specprocwp
          wpno  CDATA  #REQUIRED
          %wprsrc-vals;
          %tracking;
          %bodyatt;
          %secur;>
```

b. Attributes for <***specprocwp***>:

1. **WPNO** - The unique number assigned to this work package by the original developer. This number remains the same when the work package is reused. The work package is referenced through an ID which is (#REQUIRED) and remains with the work package for the work package life. The FOSI generates the work package sequence number. Refer to MIL-STD-40051 Part 1 to obtain the work package number format.
2. **%WPRSRC-VALS;** - Refer to common parameter entities for a complete description (see L.5.5).
3. **%TRACKING;** - Refer to common parameter entities for a complete description (see L.5.6).
4. **%WPBODYATT;** - Refer to common parameter entities for a complete description (see L.5.4).
5. **%SECUR;** - Refer to common parameter entities for a complete description (see L.5.3).

D.7.1 The element <***specialproc***> contains special or detailed procedures that will be referenced in the Maintenance Test Flight Checklist. The element includes one or more procedures (<***proc***> see L.4.1.8.1) to be performed only during a maintenance test flight.

a. DTD fragment for <***specialproc***>:

```
<!ELEMENT specialproc - - (proc+)>
<!ATTLIST specialproc
          %navlink;
```

```
%nodeloc;
%refs;
%secur;>
```

b. Attributes for <***specialproc***>:

1. **%NAVLINK;** - Refer to common parameter entities for a complete description (see L.5.8).
2. **%NODELOC;** - Refer to common parameter entities for a complete description (see L.5.9).
3. **%REFS;** - Refer to common parameter entities for a complete description (see L.5.2).
4. **%SECUR;** - Refer to common parameter entities for a complete description (see L.5.3).

Maintenance Information

E.1 **Scope.** The following paragraphs give a description and use of elements used in the MIL-STD-2361(SC) Maintenance Information Chapter DTD.

E.2 **Applicable documents.** Refer to paragraph 2.

E.3 The <***mim***> chapter must be prepared as a Maintenance Information Chapter <***mim***>. The chapter contains an optional IETM login procedure (<***login***> see L.4.7.9), and is then subdivided into work packages chosen from one of the following parameter entities: standard maintenance information ***%stdmim;***, maintenance test flight maintenance information ***%mtfmim;***, ammunitions maintenance information ***%ammomim;***, auxiliary equipment maintenance information ***%auxeqpmim;***, preventive maintenance services maintenance information ***%pmsmim;***or preventive maintenance inspections checklist maintenance information ***%pmicklistmim;***.

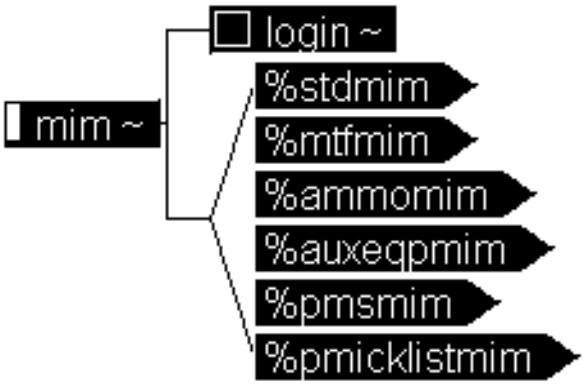

Figure 38 Maintenance Information Chapter DTD Hierarchy

a. DTD fragment for <***mim***>:

```
<!ELEMENT mim - - (login?, (%stdmim; | %mtfmim; | %ammomim; |
                    %auxeqpmim; | %pmsmim; | %pmicklistmim;))>
<!ATTLIST mim
          tmno          CDATA    #CURRENT
          tmlabel       CDATA    #IMPLIED
          eic           CDATA    #CURRENT
          imno          CDATA    #REQUIRED
          imctrlabel    NUMBER   #REQUIRED
          imlevel       (depot | operator | gensup | dirsup |
                        unitlvl | inter | avum-avim | tmlvls)  #REQUIRED
          syslevel      (enditem | func-system)  "enditem"
          system-title  CDATA                    #IMPLIED
          %imrsrc-vals;
          mimtype       (maint | ammo | auxeqp) "maint"
          revno         NUMBER   #REQUIRED
          chngno        NUMBER   #REQUIRED
          date          CDATA    #IMPLIED
```

```
%refs;
%secur;>
```

b. Attributes for <***mim***>:

1. **TMNO** - The number of the current TM. The prefix TM must be included in the attribute value. The first time the attribute is referenced for the element it is treated as required, thereafter that it will assume the current attribute value.
2. **TMLABEL** - The number of the TM of which this information chapter (IM) was a part when originally created; this number remains the same throughout all versions of the IM.
3. **EIC** - The end-item code of the equipment covered in the TM of which this IM is a part. The first time the attribute is referenced for the element it is treated as required, thereafter that it will assume the current attribute value.
4. **IMNO** - Reserved for a unique identifying number of the information chapter, when and if such a numbering system is instituted; analogous to the attribute "WPNO" at the work package level.
5. **IMCTRLABEL** - A label giving the sequence number of the information chapter within this version of the TM; allows an individual IM to be composed with full numbering of pages and components.
6. **IMLEVEL** - The maintenance level of the information chapter.
   (a) “OPERATOR” - Applies to operator maintenance level.
   (b) “UNITLVL” - Applies to unit maintenance level.
   (c) “DIRSUP” - Applies to direct support (DS) maintenance level.
   (d) “GENSUP” - Applies to general support (GS) maintenance level.
   (e) “INTER” - Applies to intermediate (DS/GS) maintenance level.
   (f) “DEPOT” - Applies to depot maintenance level.
   (g) “AVUM-AVIM” - Applies to aviation unit (AVUM) and intermediate (AVIM) maintenance level.
   (h) “TMLVLS” - Applies to all maintenance levels.
7. **SYSLEVEL** - Specifies whether the chapter constituents cover the full end item ("ENDITEM") or a particular functional system ("FUNC-SYSTEM") within the end item. When the value is not entered for the attribute “SYSLEVEL”, the default value is “ENDITEM”.
8. **SYSTEM-TITLE** - If the attribute value of "SYSLEVEL" is "FUNC-SYSTEM," this attribute is used to identify the functional system which the chapter/work package covers.
9. **%IMRSRC-VALS;** - Refer to common parameter entities for a complete description (see L.5.7).
10. **MIMTYPE** - Specifies the type of maintenance information module in order that the FOSI will be able to place the correct title on the titlepage of the information module for maintenance module, ammo maintenance, or auxeqp maintenance, the default is maint
11. **REVNO** - The overall revision number for the information chapter.
12. **CHNGNO** - The overall change number for the information module.
13. **DATE** - The date of the current version of the element.
14. **%REFS;** - Refer to common parameter entities for a complete description (see L.5.2).

15. **%SECUR;** - Refer to common parameter entities for a complete description (see L.5.3).

E.3.1 **Standard Maintenance Information Chapter *%stdmim;*.** The Standard Maintenance Information Chapter may consist of multiple service upon receipt work packages <***surwp***>, multiple personal equipment work packages <***perseqpwp***>, and either a preventive maintenance checks and services work package <***pmcswp***> followed by one or more maintenance work package <***maintwp***> or one or more phased maintenance inspection work package <***pmiwp***>, lubrication <***lubewp***>, and/or maintenance work package <***maintwp***>.

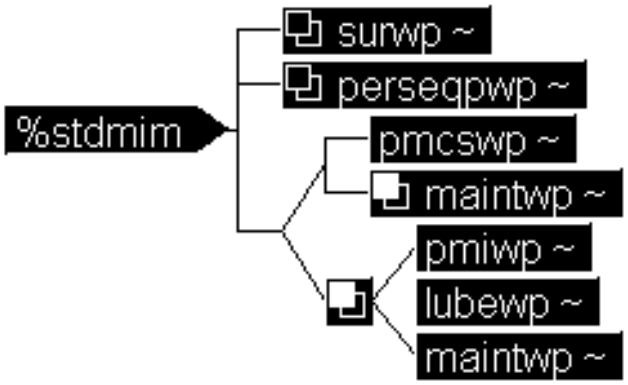

Figure 39 Standard Maintenance Information Chapter DTD Hierarchy

a. DTD fragment for ***%stdmim;***:

```
<!ENTITY % stdmim "(surwp*, perseqpwp*, ((pmcswp, maintwp+) |
           (pmiwp |lubewp | maintwp)+))">
```

E.3.1.1 **Service Upon Receipt Procedures Work Package <*surwp*>.** The service upon receipt work package is subdivided into the following elements and content requirements:

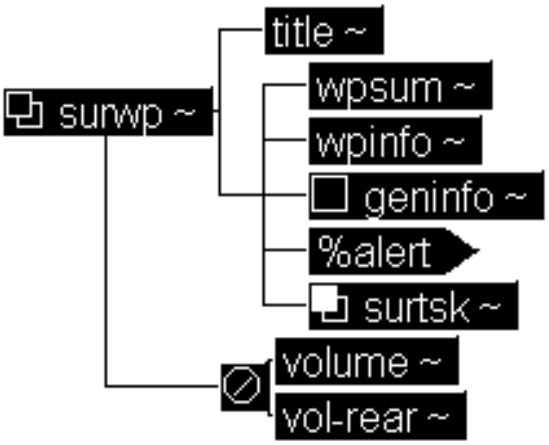

Figure 40 Service Upon Receipt Work Package DTD Hierarchy

a. DTD fragment for <***surwp***>:

```
<!ELEMENT surwp - - (title, (wpsum, wpinfo, geninfo?, %alert;, surtsk+))
                    -(%vol.group;)>
<!ATTLIST surwp     level (depot | operator |
                           gensup | dirsup |
                           unitlvl | inter) #REQUIRED
          wpno        ID                    #REQUIRED
          %tracking;
          %wprsrc-vals;
          %wpbodyatt;
          %secur;>
```

b. Attributes for <***surwp***>:

1. **LEVEL** - The maintenance level of the work package.
   (a) "OPERATOR" - Applies to operator maintenance level.
   (b) "UNITLVL" - Applies to unit maintenance level.
   (c) "DIRSUP" - Applies to direct support (DS) maintenance level.
   (d) "GENSUP" - Applies to general support (GS) maintenance level.
   (e) "INTER" - Applies to intermediate (DS/GS) maintenance level.
   (f) "DEPOT" - Applies to depot maintenance level.
   (g) "AVUM-AVIM" - Applies to aviation unit (AVUM) and intermediate (AVIM) maintenance level.
   (h) "TMLVLS" - Applies to all maintenance levels.
2. **WPNO** - The unique number assigned to this work package by the original developer. This number remains the same when the work package is reused. The work package is referenced through an ID which is (#REQUIRED) and remains with the work package for the work package life. The FOSI generates the work package sequence number. Refer to MIL-STD-40051 Part 1 to obtain the work package number format.
3. **%WPRSRC-VALS;** - Refer to common parameter entities for a complete description (see L.5.5).
4. **%TRACKING;** - Refer to common parameter entities for a complete description (see L.5.6).
5. **%WPBODYATT;** - Refer to common parameter entities for a complete description (see L.5.4).
6. **%SECUR;** - Refer to common parameter entities for a complete description (see L.5.3).

E.3.1.1.1 The element <***title***>(see L.4.1.5.1) defines the work package title.

E.3.1.1.2 The element <***wpsum***>(see L.4.6.1) summarizes the procedures in the work package. Refer to the common elements section for a complete description.(see L.4.6.1)

E.3.1.1.3 The element <***wpinfo***>(see L.4.6.1) identifies the precondition requirements (tools, personnel, etc.) needed. Refer to the common elements section for a complete description.(see L.4.6.2)

E.3.1.1.4 The element <***geninfo***>(see L.4.5.7) is introductory information for the work package.

E.3.1.1.5 The parameter entity ***%alert;*** (see L.3.2) is the necessary alert notices.

E.3.1.1.6 The element <***surtsk***> is used for all tasks required in the service upon receipt work package and contained within this element. The element <***surtsk***> contains a parameter entity ***%surtsk;*** which contains the following tasks: <***siting***>, <***shltr***>, <***surmat***>, <***install***>, <***preserv***>, <***preckadj***>, <***precal***>, and/or <***calign***>

a. DTD fragment for <***surtsk***> and ***%surtsk;***:

```
<!ELEMENT surtsk - - (%surtsk;)>
<!ATTLIST surtsk
          %refs;
          %secur;>

<!ENTITY % surtsk "(siting?, shltr?, surmat?, install?, preserv?,
                    prechkadj?, precal?, calign?)">
```

b. Attributes for <***surtsk***>:

1. **%REFS;** - Refer to common parameter entities for a complete description (see L.5.2).
2. **%SECUR;** - Refer to common parameter entities for a complete description (see L.5.3).

E.3.1.1.6.1 The element <***siting***> is a service upon receipt task for site requirements that must be considered prior to siting. Overall site location, power sources, terrain requirements, and other similar considerations should be included within this element. This element includes a required title (<***title***> see L.4.1.5.1)followed by paragraphs (<***para***> see L.4.1.5.3), paragraphs with required alert notices (<***specpara***> see L.4.1.1.1), and/ or procedural text (<***proc***>see L.4.1.8.1).

a. DTD fragment for <***siting***>:

```
<!ELEMENT siting - - (title, (para | specpara | proc)+)>
<!ATTLIST siting
          %refs;
          %secur;>
```

b. Attributes for <***siting***>:

1. **%REFS;** - Refer to common parameter entities for a complete description (see L.5.2).
2. **%SECUR;** - Refer to common parameter entities for a complete description (see L.5.3).

E.3.1.1.6.2 The element <***shltr***> is a service upon receipt task that specifies the shelter requirements for equipment normally housed in a permanent or semi-permanent shelter. Requirements for dimensions, floor loading, layout, power or environmental conditions and other similar considerations should be included within this element. This element does not apply to trucks, vans or transportable shelters. This element includesparagraphs (<***para***> see L.4.1.5.3), paragraphs with required alert notices (<***specpara***> see L.4.1.1.1), and/or procedural text (<***proc***>see L.4.1.8.1).

a. DTD fragment for <***shltr***>:

```
<!ELEMENT shltr - - (para | specpara | proc)+>
<!ATTLIST shltr
          %refs;
          %secur;>
```

b. Attributes for <***shltr***>:

1. **%REFS;** - Refer to common parameter entities for a complete description (see L.5.2).
2. **%SECUR;** - Refer to common parameter entities for a complete description (see L.5.3).

E.3.1.1.6.3 The element <***surmat***> is a service upon receipt of material task which contains information on unpacking <***unpack***>, checking <***chkeqp***>, and processing equipment<***processeqp***>. In addition, a navigational reference (<***navref***> see L.4.7.10) may be entered anywhere within <***surmat***>.

a. DTD fragment for <***surmat***>:

```
<!ELEMENT surmat - - (unpack | chkeqp | processeqp)+ +(navref)>
<!ATTLIST surmat
          %navlink;
          %refs;
          %secur;>
```

b. Attributes for <***surmat***>:

1. **%NAVLINK;** - Refer to common parameter entities for a complete description (see L.5.8).
2. **%REFS;** - Refer to common parameter entities for a complete description (see L.5.2).
3. **%SECUR;** - Refer to common parameter entities for a complete description (see L.5.3).

E.3.1.1.6.3.1 The element <***unpack***> is service upon receipt task containing all unpacking information. It contains paragraphs of text that may be grouped into sections or subsections (***%titldtext;*** see L.3.3) or one or more procedure (<***proc***> see L.4.1.8.1).

a. DTD fragment for <***unpack***>:

```
<!ELEMENT unpack - o ((%titldtext;) | proc+)>
      <!ATTLIST unpack
                %navlink;
                %nodeloc;
                %bodyatt;
                %secur;>
```

b. Attributes for <***unpack***>:

1. **%NAVLINK;** - Refer to common parameter entities for a complete description (see L.5.8).
2. **%NODELOC;** - Refer to common parameter entities for a complete description (see L.5.9).
3. **%BODYATT;** - Refer to common parameter entities for a complete description (see L.5.1).
4. **%SECUR;** - Refer to common parameter entities for a complete description (see L.5.3).

E.3.1.1.6.3.2 The element <***chkeqp***> is a service upon receipt of material task that contains all inspections required after equipment is unpacked. It contains paragraphs (<***para***> see L.4.1.5.3), paragraphs with required alert notices (<***specpara***> see L.4.1.1.1), and/or procedural text (<***proc***>see L.4.1.8.1). An entity reference may be made to include the Transportation Discrepancy Report (TDR) (SF Form 361). The content tagged tables <***crit.insp.tab***> and/or <***pecul.insp.tab***> may be entered within this element.

a. DTD fragment for <***chkeqp***>:

```
<!ELEMENT chkeqp - o (para | specpara | proc)+ +(crit.insp.tab | pecul.insp.tab)>
<!ATTLIST chkeqp
          %bodyatt;
```

```
%secur;>
```

b. Attributes for <***chkeqp***>:

1. **%BODYATT;** - Refer to common parameter entities for a complete description (see L.5.1).
2. **%SECUR;** - Refer to common parameter entities for a complete description (see L.5.3).

E.3.1.1.6.3.2.1 The element <***crit.insp.tab***> contains the content elements required for the criteria inspection table. It contains a required title <***title***>, followed by the elements which make up the table itself. The table may be broken up into sections which have a heading <***subtitle***>. The component assemblies <***compnt-assem***> are followed by at least one grouping of acceptance <***accept***>, repairable <***repairable***>, and non-repairable <***nonrepairable***>.

a. DTD fragment for <***crit.insp.tab***>:

```
<!ELEMENT crit.insp.tab - - (title, (subtitle?, (compnt-assem, (accept,
                              repairable, nonrepairable)+)+)+)>
<!ATTLIST crit.insp.tab
          %bodyatt;
          %secur;>
```

b. Attributes for <***crit.insp.tab***>:

1. **%BODYATT;** - Refer to common parameter entities for a complete description (see L.5.1).
2. **%SECUR;** - Refer to common parameter entities for a complete description (see L.5.3).

E.3.1.1.6.3.2.1.1 The element title (<***title***> see L.4.1.5.1) defines the table title.

E.3.1.1.6.3.2.1.2 The element subtitle (<***subtitle***> see L.4.1.5.1) defines a subtitle used to create sections within the table.

E.3.1.1.6.3.2.1.3 The element <***compnt-assem***> is used to enter the component assembly (***%text;***(see L.3.6) is available to enter inline formatting and contextual characteristics).

a. DTD fragment for <***compnt-assem***>, <***location***>, and <***seqno***>:

```
<!ELEMENT (seqno | location | compnt-assem) - o (%text;) >
```

E.3.1.1.6.3.2.1.4 The acceptions element <***accept***> is used to enter any acceptions to the component/assembly (***%text;***(see L.3.6) is available to enter inline formatting and contextual characteristics).

a. DTD fragment for <***accept***>, <***repairable***>, and <***nonrepairable***>:

```
<!ELEMENT (accept |repairable | nonrepairable) - o (%text;) >
```

E.3.1.1.6.3.2.1.5 The repairable element <***repairable***> is used to enter text stating when the component/ assembly is repairable (***%text;***(see L.3.6) is available to enter inline formatting and contextual characteristics).

a. DTD fragment for <***repairable***>: (see E.3.1.1.6.3.2.1.4a.)

E.3.1.1.6.3.2.1.6 The non-repairable element<***nonrepairable***> is used to enter text stating when the component/ assembly is non-repairable (***%text;***(see L.3.6) is available to enter inline formatting and contextual characteristics).

a. DTD fragment for <***nonrepairable***>: (see E.3.1.1.6.3.2.1.4a.)

E.3.1.1.6.3.2.2 The element <***pecul.insp.tab***> contains the content elements required for the peculiar inspection table. It contains a required title <***title***>, followed by the elements which make up the table itself. The table contains one or more locations <***location***> each of which is followed by an item <***item***>, each location and item must be followed by at least one grouping of a primary level step <***step1***> followed by remarks <***remarks***>.

a. DTD fragment for <***pecul.insp.tab***>:

```
<!ELEMENT pecul.insp.tab - - (title, (location, item, (step1,
                              remarks)+)+)>
<!ATTLIST pecul.insp.tab
          %bodyatt;
          %secur;>
```

b. Attributes for <***pecul.insp.tab***>:

1. **%BODYATT;** - Refer to common parameter entities for a complete description (see L.5.1).
2. **%SECUR;** - Refer to common parameter entities for a complete description (see L.5.3).

E.3.1.1.6.3.2.2.1 The element title (<***title***> see L.4.1.5.1) defines the table title.

E.3.1.1.6.3.2.2.2 The location element <***location***> is used to identify the location of the item (***%text;***(see L.3.6) is available to enter inline formatting and contextual characteristics).

a. DTD fragment for <***location***>: (see E.3.1.1.6.3.2.1.3a.)

E.3.1.1.6.3.2.2.3 The item element <***item***> (see L.4.1.2.1.1) is used to identify the item in the peculiar inspection table.

E.3.1.1.6.3.2.2.4 A primary level step <***step1***> (see L.4.1.8.2)may be entered within the peculiar inspection table to enter the steps of the inspection.

E.3.1.1.6.3.2.2.5 The remarks element <***remarks***> may be used to enter any additional remarks (***%text;***(see L.3.6) is available to enter inline formatting and contextual characteristics).

a. DTD fragment for <***remarks***>:

```
<!ELEMENT remarks - o (%text;)>
<!ATTLIST remarks
          %refs;
          %secur;>
```

b. Attributes for <***remarks***>:

1. **%REFS;** - Refer to common parameter entities for a complete description (see L.5.2).
2. **%SECUR;** - Refer to common parameter entities for a complete description (see L.5.3).

E.3.1.1.6.3.3 The element <***processeqp***> is a service upon receipt of materials task containing all procedures and inspections for cleaning or processing unpacked equipment. It containsparagraphs (<***para***> see L.4.1.5.3), paragraphs with required alert notices (<***specpara***> see L.4.1.1.1), and/or procedural text (<***proc***>see L.4.1.8.1).

a. DTD fragment for <***processeqp***>:

```
<!ELEMENT processeqp - o (para | specpara | proc)+>
<!ATTLIST processeqp
          %bodyatt;
          %secur;>
```

b. Attributes for <***processeqp***>:

1. **%BODYATT;** - Refer to common parameter entities for a complete description (see L.5.1).
2. **%SECUR;** - Refer to common parameter entities for a complete description (see L.5.3).

E.3.1.1.6.4 The element <***install***> is a service upon receipt task containing necessary instructions for proper installation of equipment. The use of tools, necessary interconnections, and procedures to lubricate, calibrate and adjust equipment are included within this task. It may contain narrative text withinparagraphs (<***para***> see L.4.1.5.3), paragraphs with required alert notices (<***specpara***> see L.4.1.1.1), and/or procedural text (<***proc***>see L.4.1.8.1) or the text may be entered in tabular format (<***table***>see L.4.2.1).

a. DTD fragment for <***install***>:

```
<!ELEMENT install - - ((para | specpara | proc)+ | table)>
<!ATTLIST install
          %bodyatt;
          %secur;>
```

b. Attributes for <***install***>:

1. **%BODYATT;** - Refer to common parameter entities for a complete description (see L.5.1).
2. **%SECUR;** - Refer to common parameter entities for a complete description (see L.5.3).

E.3.1.1.6.5 The element <***preserv***> is a service upon receipt task that contains instructions for lubrication of newly installed equipment. It contains paragraphs of text that may be grouped into sections or subsections (***%titldtext;*** see L.3.3)or procedural text (<***proc***>see L.4.1.8.1).

a. DTD fragment for <***preserv***>:

```
<!ELEMENT preserv - - ((%titldtext;) | proc+)>
<!ATTLIST preserv
          %navlink;
          %bodyatt;
          %secur;>
```

b. Attributes for <***preserv***>:

1. **%NAVLINK;** - Refer to common parameter entities for a complete description (see L.5.8).
2. **%BODYATT;** - Refer to common parameter entities for a complete description (see L.5.1).
3. **%SECUR;** - Refer to common parameter entities for a complete description (see L.5.3).

E.3.1.1.6.6 The element <***prechkadj***> is a service upon receipt task for preliminary checks and adjustments of newly installed equipment. Data on location of parts, controls, and check-points are contained within <***prechkadj***>. It contains paragraphs (<***para***> see L.4.1.5.3), paragraphs with required alert notices (<***specpara***> see L.4.1.1.1), and/or procedural text (<***proc***>see L.4.1.8.1).

a. DTD fragment for <***prechkadj***>:

```
<!ELEMENT prechkadj - - (para | specpara | proc)+>
<!ATTLIST prechkadj
          %bodyatt;
          %secur;>
```

b. Attributes for <***prechkadj***>:

1. **%BODYATT;** - Refer to common parameter entities for a complete description (see L.5.1).
2. **%SECUR;** - Refer to common parameter entities for a complete description (see L.5.3).

E.3.1.1.6.7 The element <***precal***> is a service upon receipt task for preliminary calibration of newly installed equipment. It contains paragraphs (<***para***> see L.4.1.5.3), paragraphs with required alert notices (<***specpara***> see L.4.1.1.1), and/or procedural text (<***proc***>see L.4.1.8.1).

a. DTD fragment for <***precal***>:

```
<!ELEMENT precal - - (para | specpara | proc)+>
<!ATTLIST precal
          %bodyatt;
          %secur;>
```

b. Attributes for <***precal***>:

1. **%BODYATT;** - Refer to common parameter entities for a complete description (see L.5.1).
2. **%SECUR;** - Refer to common parameter entities for a complete description (see L.5.3).

E.3.1.1.6.8 The element <***calign***> is a service upon receipt task containing instructions for circuit alignment including external connections <***extconn***>, switch settings, patch panel connections and internal control settings <***setconn***> and alignment procedures <***alignproc***>.

a. DTD fragment for <***calign***>:

```
<!ELEMENT calign - - (extconn?, setconn?, alignproc?) +(navref)>
<!ATTLIST calign
          %navlink;
          %bodyatt;
          %secur;>
```

b. Attributes for <***calign***>:

1. **%NAVLINK;** - Refer to common parameter entities for a complete description (see L.5.8).
2. **%BODYATT;** - Refer to common parameter entities for a complete description (see L.5.1).
3. **%SECUR;** - Refer to common parameter entities for a complete description (see L.5.3).

E.3.1.1.6.8.1 The element <***extconn***> contains instructions for making all external connections within the circuit alignment procedures. It contains paragraphs (<***para***> see L.4.1.5.3), paragraphs with required alert notices (<***specpara***> see L.4.1.1.1), and/or procedural text (<***proc***>see L.4.1.8.1).

a. DTD fragment for <***extconn***>:

```
<!ELEMENT extconn - o (para | specpara | proc)+>
<!ATTLIST extconn
          %navlink;
          %bodyatt;
          %secur;>
```

b. Attributes for <***extconn***>:

1. **%NAVLINK;** - Refer to common parameter entities for a complete description (see L.5.8).
2. **%BODYATT;** - Refer to common parameter entities for a complete description (see L.5.1).
3. **%SECUR;** - Refer to common parameter entities for a complete description (see L.5.3).

E.3.1.1.6.8.2 The element <***setconn***> contains instructions for all switch settings, patch panel connections, and internal control settings for each installation and mode of operation within the circuit alignment procedures. It contains paragraphs (<***para***> see L.4.1.5.3), paragraphs with required alert notices (<***specpara***> see L.4.1.1.1), and/or procedural text (<***proc***>see L.4.1.8.1).

a. DTD fragment for <***setconn***>:

```
<!ELEMENT setconn - o (para | specpara | proc)+>
<!ATTLIST setconn
          %navlink;
          %bodyatt;
          %secur;>
```

b. Attributes for <***setconn***>:

1. **%NAVLINK;** - Refer to common parameter entities for a complete description (see L.5.8).
2. **%BODYATT;** - Refer to common parameter entities for a complete description (see L.5.1).
3. **%SECUR;** - Refer to common parameter entities for a complete description (see L.5.3).

E.3.1.1.6.8.3 The element <***alignproc***> contains all of the alignment procedures for circuit alignment. It contains paragraphs (<***para***> see L.4.1.5.3), paragraphs with required alert notices (<***specpara***> see L.4.1.1.1), and/or procedural text (<***proc***>see L.4.1.8.1).

a. DTD fragment for <***alignproc***>:

```
<!ELEMENT alignproc - o (para | specpara | proc)+>
<!ATTLIST alignproc
          %navlink;
          %bodyatt;
          %secur;>
```

b. Attributes for <***alignproc***>:

1. **%NAVLINK;** - Refer to common parameter entities for a complete description (see L.5.8).
2. **%BODYATT;** - Refer to common parameter entities for a complete description (see L.5.1).
3. **%SECUR;** - Refer to common parameter entities for a complete description (see L.5.3).

E.3.1.2 **Personal Equipment Work Package <*perseqpwp*>.** The element <***perseqpwp***> identifies an equipment/ user fitting instructions work package. The personal equipment work package is subdivided into the following elements and content requirements:

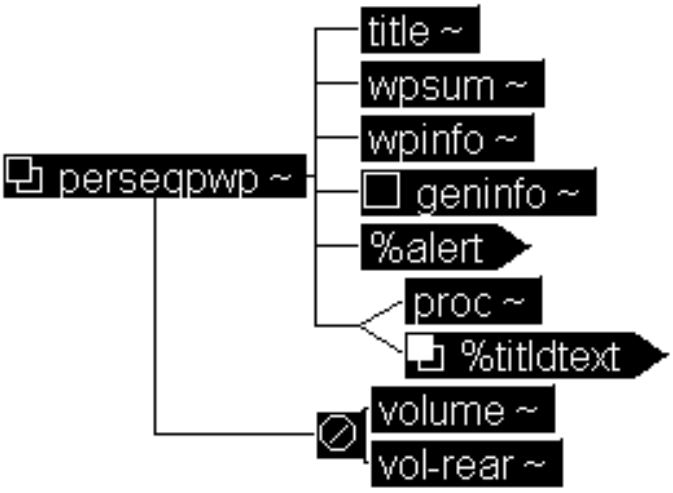

Figure 41 Personal Equipment Work Package DTD Hierarchy

a. DTD fragment for <***perseqpwp***>:

```
<!ELEMENT perseqpwp - - (title, wpsum, wpinfo, geninfo?, %alert;,
                        (proc | (%titldtext;)+)) -(%vol.group;)>
<!ATTLIST perseqpwp level  (depot | operator |
                           gensup | dirsup |
                           unitlvl | inter |
                           avum-avim | tmlvls) #REQUIRED
          wpno       ID                        #REQUIRED
          %navlink;
          %tracking;
          %wprsrc-vals;
          %wpbodyatt;
          %secur;>
```

b. Attributes for <***perseqpwp***>:

1. **LEVEL** - The maintenance level of the work package.
   (a) “OPERATOR” - Applies to operator maintenance level.
   (b) “UNITLVL” - Applies to unit maintenance level.
   (c) “DIRSUP” - Applies to direct support (DS) maintenance level.
   (d) “GENSUP” - Applies to general support (GS) maintenance level.
   (e) “INTER” - Applies to intermediate (DS/GS) maintenance level.
   (f) “DEPOT” - Applies to depot maintenance level.
   (g) “AVUM-AVIM” - Applies to aviation unit (AVUM) and intermediate (AVIM) maintenance level.
   (h) “TMLVLS” - Applies to all maintenance levels.

2. **WPNO** - The unique number assigned to this work package by the original developer. This number remains the same when the work package is reused. The work package is referenced through an ID which is (#REQUIRED) and remains with the work package for the work package life. The FOSI generates the work package sequence number. Refer to MIL-STD-40051 Part 1 to obtain the work package number format.
3. **%NAVLINK;** - Refer to common parameter entities for a complete description (see L.5.8).
4. **%TRACKING;** - Refer to common parameter entities for a complete description (see L.5.6).
5. **%WPRSRC-VALS;** - Refer to common parameter entities for a complete description (see L.5.5).
6. **%WPBODYATT;** - Refer to common parameter entities for a complete description (see L.5.4).
7. **%SECUR;** - Refer to common parameter entities for a complete description (see L.5.3).

E.3.1.2.1 The element ***<title>***(see L.4.1.5.1) defines the work package title.

E.3.1.2.2 The element ***<wpsum>***(see L.4.6.1) summarizes the procedures in the work package. Refer to the common elements section for a complete description.(see L.4.6.1)

E.3.1.2.3 The element ***<wpinfo>***(see L.4.6.1) identifies the precondition requirements (tools, personnel, etc.) needed. Refer to the common elements section for a complete description.(see L.4.6.2)

E.3.1.2.4 The element ***<geninfo>***(see L.4.5.7) is introductory information for the work package.

E.3.1.2.5 The parameter entity ***%alert;*** (see L.3.2) is the necessary alert notices.

E.3.1.2.6 The parameter enity ***%titldtext;***(see L.3.3) contains paragraphs of text that may be grouped into sections or subsections.

E.3.1.2.7 The element ***<proc>*** (see L.4.1.8.1) contains procedural text .

E.3.1.3 **Preventive Maintenance Checks and Services Work Package *<pmcswp>*.** The element ***<pmcswp>*** is used for all of the data required to perform Preventive Maintenance Checks and Services (PMCS) on the equipment contained in the PMCS work package. The element ***<pmcswp>*** is subdivided into the following elements and content requirements:

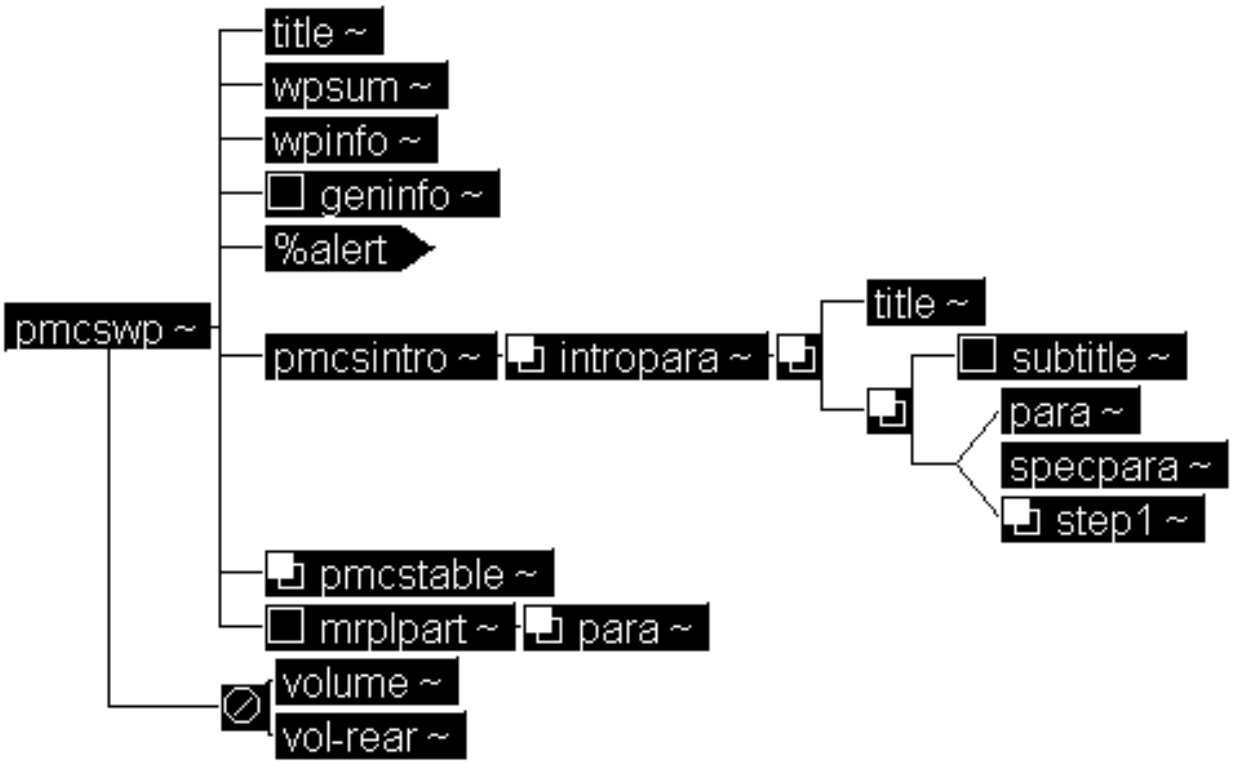

Figure 42 Preventive Maintenance Checks and Services Work Package DTD Hierarchy

a. DTD fragment for <***pmcswp***>:

```
<!ELEMENT pmcswp - - (title, wpsum, wpinfo, geninfo?, %alert;,
                      pmcsintro, pmcstable+, mrplpart?) -(%vol.group;)>
<!ATTLIST pmcswp level (depot | operator |
                        gensup | dirsup |
                        unitlvl | inter |
                        avum-avim | tmlvls) #REQUIRED
          wpno         ID                  #REQUIRED
          %navlink;
          %tracking;
          %wprsrc-vals;
          %wpbodyatt;
          %secur;>
```

b. Attributes for <***pmcswp***>:

1. **LEVEL** - The maintenance level of the work package.
   (a) “OPERATOR” - Applies to operator maintenance level.
   (b) “UNITLVL” - Applies to unit maintenance level.

(c) “DIRSUP” - Applies to direct support (DS) maintenance level.

(d) “GENSUP” - Applies to general support (GS) maintenance level.

(e) “INTER” - Applies to intermediate (DS/GS) maintenance level.

(f) “DEPOT” - Applies to depot maintenance level.

(g) “AVUM-AVIM” - Applies to aviation unit (AVUM) and intermediate (AVIM) maintenance level.

(h) “TMLVLS” - Applies to all maintenance levels.

2. **WPNO** - The unique number assigned to this work package by the original developer. This number remains the same when the work package is reused. The work package is referenced through an ID which is (#REQUIRED) and remains with the work package for the work package life. The FOSI generates the work package sequence number. Refer to MIL-STD-40051 Part 1 to obtain the work package number format.
3. **%NAVLINK;** - Refer to common parameter entities for a complete description (see L.5.8).
4. **%TRACKING;** - Refer to common parameter entities for a complete description (see L.5.6).
5. **%WPRSRC-VALS;** - Refer to common parameter entities for a complete description (see L.5.5).
6. **%WPBODYATT;** - Refer to common parameter entities for a complete description (see L.5.4).
7. **%SECUR;** - Refer to common parameter entities for a complete description (see L.5.3).

E.3.1.3.1 The element <***title***>(see L.4.1.5.1) defines the work package title.

E.3.1.3.2 The element <***wpsum***>(see L.4.6.1) summarizes the procedures in the work package. Refer to the common elements section for a complete description.(see L.4.6.1)

E.3.1.3.3 The element <***wpinfo***>(see L.4.6.1) identifies the precondition requirements (tools, personnel, etc.) needed. Refer to the common elements section for a complete description.(see L.4.6.2)

E.3.1.3.4 The element <***geninfo***>(see L.4.5.7) is introductory information for the work package.

E.3.1.3.5 The parameter entity ***%alert;*** (see L.3.2) is the necessary alert notices.

E.3.1.3.6 The element <***pmcsintro***> contains at least one introductory paragraph <***intropara***> regarding the PMCS table.

a. DTD fragment for <***pmcsintro***>:

```
<!ELEMENT pmcsintro - - (intropara)+>
<!ATTLIST pmcsintro
          %refs;
          %secur;>
```

b. Attributes for <***pmcsintro***>:

1. **%REFS;** - Refer to common parameter entities for a complete description (see L.5.2).
2. **%SECUR;** - Refer to common parameter entities for a complete description (see L.5.3).

E.3.1.3.6.1 The element <***intropara***> contains the explanation material for the PMCS table. It contains at least one section of text containing a required title (<***title***> see L.4.1.5.1), an optional subtitle (<***subtitle***>see

L.4.1.5.2) followed by paragraphs (<***para***>see L.4.1.5.3) , paragraphs with required alert notices (<***specpara***> see L.4.1.1.1), and/or primary level steps (<***step1***> see L.4.1.8.2).

a. DTD fragment for <***intropara***>:

```
<!ELEMENT intropara - o ((title, (subtitle?, (para| specpara |
                         step1+))+))+>
<!ATTLIST intropara
          %refs;
          %secur;>
```

b. Attributes for <***intropara***>:

1. **%REFS;** - Refer to common parameter entities for a complete description (see L.5.2).
2. **%SECUR;** - Refer to common parameter entities for a complete description (see L.5.3).

E.3.1.3.7 The element <***pmcstable***> identifies the detailed requirements of the PMCS table. The title of the table must be entered after the title (<***title***> see L.4.1.5.1) element. The <***pmcstable***> contains at least one period definition, if the intervals are broken into columns, <***perioddef***> followed by at least one <***pmcs-entry***>. A <***pmcs-entry***> is equivalent to a “row” in a structural table.

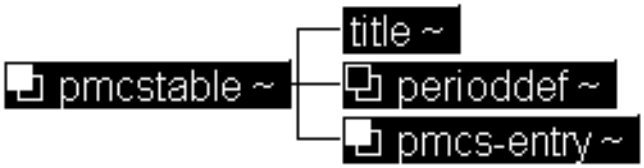

Figure 43 PMCS Table DTD Hierarchy

a. DTD fragment for <***pmcstable***>:

```
<!ELEMENT pmcstable - - (title, perioddef*, pmcs-entry+)>
<!ATTLIST pmcstable
          crew-maintained  %yesorno;        #IMPLIED
          %navlink;
          tabstyle         NMTOKEN          #IMPLIED
          tocentry         %yesorno;        "1"
          frame            (top | bottom |
                           topbot | all |
                           sides | none)   "all"
          colsep           %yesorno;  "1"
          rowsep           %yesorno;  "0"
          orient           (port | land)    "port"
          %refs;
          %secur;>
```

b. Attributes for <***pmcstable***>:

1. **CREW-MAINTAINED** - Specifies whether or not the equipment is maintained by an entire crew (1 or any other number) or a single individual (0). If it is maintained by a crew, it indicates that there will be separation of steps according to crew members within the table.

2. **%NAVLINK;** - Refer to common parameter entities for a complete description (see L.5.8).
3. **TABSTYLE** - A unique table style defined in the FOSI. Currently there is only one PMCS table style defined and this attribute does not need to be used.
4. **TOCENTRY** - If other than zeros, the table title should be included in the list of tables. The default is for the table title to be placed in the table of contents.
5. **FRAME** - Describes position of outer rulings. The default is “ALL”.
   (a) “TOP” - Ruling across top of table only.
   (b) “BOTTOM” - Ruling across bottom of table only.
   (c) “TOPBOT” - Ruling across top and bottom of table only.
   (d) “ALL” - Ruling across top, bottom, and sides of table.
   (e) “SIDES” - Ruling across sides of table only.
   (f) “NONE” - No rulings.
6. **COLSEP** - Determines column separation. If other than zeros, display the internal column rulings to the right of each item; if only zeros, do not display it. Ig-nored for the last column, where the frame setting applies. The default is for column separation to occur.
7. **ROWSEP** - Determines row separation. If other than zeros, display the internal vertical row ruling below each item. If only zeros, do not display it. Ignored for the last row of the table, where the frame value applies. The default is for no separation between rows.
8. **ORIENT** - The orientation of the table in relationship to the page. The default is for the table to appear in portrait form.
   (a) “PORT” - Portrait.
   (b) “LAND” - Landscape.
9. **%REFS;** - Refer to common parameter entities for a complete description (see L.5.2).
10. **%SECUR;** - Refer to common parameter entities for a complete description (see L.5.3).

E.3.1.3.7.1 The period definitions<***perioddef***> are used when the format of the PMCS table is to break the interval column into several columns, each of which contain the abbreviation of the interval. The columns will then be marked if that is the interval identified for a particular procedure. Each additional column needs a separate period definition with its associated attributes.

a. DTD fragment for <***perioddef***>:

```
<!ELEMENT perioddef - o EMPTY>
<!ATTLIST perioddef
          abbrev  NMTOKEN  #IMPLIED
          no      NUMBER   #IMPLIED>
```

b. Attributes for <***perioddef***>:

1. **ABBREV** - The abbreviation of the interval to appear in the column heading in abbreviated form.
2. **NO** - Specifies the column number in which the abbreviated interval should appear.

E.3.1.3.7.2 The <***pmcs-entry***> identifies the detailed requirements of the contents of each column in a PMCS table. Equivalent to entering "row" in a structural table.

a. DTD fragment for <***pmcs-entry***>:

```
<!ELEMENT pmcs-entry - - (itemno, interval, manhours, checked, pmcsproc)>
<!ATTLIST pmcs-entry
          crewmember   CDATA   #CURRENT
          %navlink;
          %refs;
          %secur;>
```

b. Attributes for <***pmcs-entry***>:

1. **CREWMEMBER** - the crewmember that should perform these procedures is specified. This will appear in the table prior to the beginning of the procedure. The declared value is any characters.
2. **%NAVLINK;** - Refer to common parameter entities for a complete description (see L.5.8).
3. **%REFS;** - Refer to common parameter entities for a complete description (see L.5.2).
4. **%SECUR;** - Refer to common parameter entities for a complete description (see L.5.3).

E.3.1.3.7.2.1 The element <***itemno***> contains the item number assigned to the procedure (***%text;***(see L.3.6) is available to enter inline formatting and contextual characteristics).

a. DTD fragment for <***itemno***>:

```
<!ELEMENT itemno - - (%text;)>
<!ATTLIST itemno
          %refs;
          %secur;>
```

b. Attributes for <***itemno***>:

1. **%REFS;** - Refer to common parameter entities for a complete description (see L.5.2).
2. **%SECUR;** - Refer to common parameter entities for a complete description (see L.5.3).

E.3.1.3.7.2.2 The element <***interval***> identifies the PMCS table interval column containing the interval between checks. If the table has no period definitions <***perioddef***>, the element <***text***> (see L.3.6)is entered and the text is entered after this element. If the table has period definitions, the columns which should be marked are entered using the period <***period***> element.

a. DTD fragment for <***interval***>:

```
<!ELEMENT interval - o (text | period)>
<!ATTLIST interval
          %refs;
          %secur;>
```

b. Attributes for <***interval***>:

1. **%REFS;** - Refer to common parameter entities for a complete description (see L.5.2).
2. **%SECUR;** - Refer to common parameter entities for a complete description (see L.5.3).

E.3.1.3.7.2.2.1 The associated attributes of the element <***period***>are used to specify how the column entered should be marked.

a. DTD fragment for <***period***>:

```
<!ELEMENT period - o EMPTY>
<!ATTLIST period no NUMBER    #IMPLIED
          fill      %yesorno; "1">
```

b. Attributes for <***period***>:

1. **NO** - Specifies the period column number to be marked.
2. **FILL** - Specifies whether the column entered in the number (”no”) attribute should be “filled” or “marked”.
   (a) “1” (or any other nonzero number) - Implies the column should be filled with a bullet.
   (b) “0” - Implies the column should be marked with an “X”.

E.3.1.3.7.2.3 The element <***manhours***>, which is the PMCS table man-hour column, contains manhours required to perform lubrication services (***%text;***(see L.3.6) is available to enter inline formatting and contextual characteristics). Manhours are listed in 6 minute segments (1/10 of an Hour).

a. DTD fragment for <***manhours***>:

```
<!ELEMENT manhours - o (%text;)>
<!ATTLIST manhours
          %refs;
          %secur;>
```

b. Attributes for <***manhours***>:

1. **%REFS;** - Refer to common parameter entities for a complete description (see L.5.2).
2. **%SECUR;** - Refer to common parameter entities for a complete description (see L.5.3).

E.3.1.3.7.2.4 The element <***checked***> represents the PMCS table column where items to be checked or serviced are entered (***%text;***(see L.3.6) is available to enter inline formatting and contextual characteristics).

a. DTD fragment for <***checked***>:

```
<!ELEMENT checked - o (%text;)>
<!ATTLIST checked
          %refs;
          %secur;>
```

b. Attributes for <***checked***>:

1. **%REFS;** - Refer to common parameter entities for a complete description (see L.5.2).
2. **%SECUR;** - Refer to common parameter entities for a complete description (see L.5.3).

E.3.1.3.7.2.5 The element <***pmcsproc***> which represents the PMCS table procedure column, contains a brief description of the procedure by which each check is to be performed, as well as any information required to accomplish each check or service, including lubrication, appropriate tolerances, adjustment limits, and instrument gage readings. PMCS procedures contain an optional title (<***title***> see L.4.1.5.1), an optional crewmember element <***crewmember***>, followed by either paragraphs (<***para***> see L.4.1.5.3) and/or paragraphs with required alert notices (<***specpara***> see L.4.1.1.1) or at least one primary step level (<***step1***> see L.4.1.8.2).

a. DTD fragment for <***pmcsproc***>:

```
<!ELEMENT pmcsproc - - (title?, crewmember?, ((para | specpara )+ |
                        step1+), eqpnotavail*)>
<!ATTLIST pmcsproc
          %navlink;
          %refs;
          %secur;>
```

b. Attributes for <***pmcsproc***>:

1. **%NAVLINK;** - Refer to common parameter entities for a complete description (see L.5.8).
2. **%REFS;** - Refer to common parameter entities for a complete description (see L.5.2).
3. **%SECUR;** - Refer to common parameter entities for a complete description (see L.5.3).

E.3.1.3.7.2.5.1 The optional element <***crewmember***> represents the PMCS table column where the crewmember who performs the preventive maintenance check in the interval column is entered.

a. DTD fragment for <***crewmember***>:

```
<!ELEMENT crewmember - - (#PCDATA)>
<!ATTLIST crewmember
          %refs;
          %secur;>
```

b. Attributes for <***crewmember***>:

1. **%REFS;** - Refer to common parameter entities for a complete description (see L.5.2).
2. **%SECUR;** - Refer to common parameter entities for a complete description (see L.5.3).

E.3.1.3.7.2.5.2 The optional and repeatable <***eqpnotavail***> equipment not ready/available if column of the PMCS table defines the condition of the equipment (shortages, malfunctions, etc.) that will make equipment not ready or available for use (***%text;***(see L.3.6) is available to enter inline formatting and contextual characteristics). If this element is entered, it will appear in the same column as primary level steps <***step1***>.

a. DTD fragment for <***eqpnotavail***>:

```
<!ELEMENT eqpnotavail - o (%text;)>
<!ATTLIST eqpnotavail
          %refs;
          %secur;>
```

b. Attributes for <***eqpnotavail***>:

1. **%REFS;** - Refer to common parameter entities for a complete description (see L.5.2).
2. **%SECUR;** - Refer to common parameter entities for a complete description (see L.5.3).

E.3.1.3.8 The mandatory replacement parts element <***mrplpart***> is used for describing data in this portion of the PMCS work package. The element <***mrplpart***> contains at least one paragraph (<***para***>see L.4.1.5.3) regarding mandatory replacement parts.

a. DTD fragment for <***mrplpart***>:

```
<!ELEMENT mrplpart - - (para)+>
<!ATTLIST mrplpart
          %navlink;
          %refs;
          %secur;>
```

b. Attributes for <***mrplpart***>:

1. **%NAVLINK;** - Refer to common parameter entities for a complete description (see L.5.8).
2. **%REFS;** - Refer to common parameter entities for a complete description (see L.5.2).
3. **%SECUR;** - Refer to common parameter entities for a complete description (see L.5.3).

E.3.1.4 **Maintenance Work Packages <*maintwp*>.** The element <***maintwp***> covers maintenance tasks required to maintain all types of equipment at all maintenance levels. There may be more than one maintenance work package. The maintenance work package is subdivided into the following elements and content requirements:

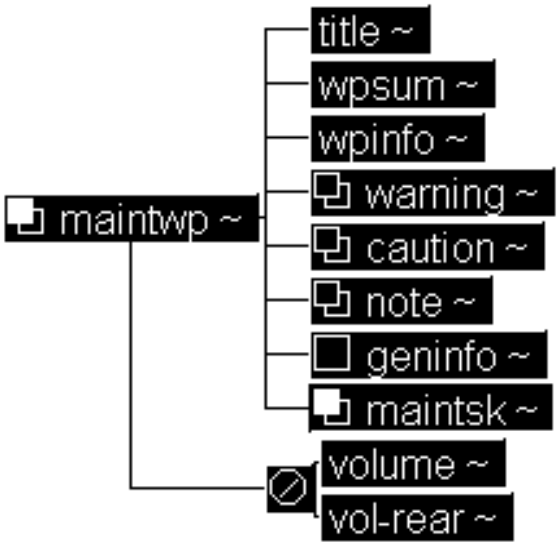

Figure 44 Maintenance Work Packages DTD Hierarchy

a. DTD fragment for <***maintwp***>:

```
<!ELEMENT maintwp - - (title, wpsum, wpinfo, warning*, caution*, note*,
                      geninfo?, maintsk+) -(%vol.group;)>
<!ATTLIST maintwp level (depot | operator |
                        gensup | dirsup |
                        unitlvl | inter)   #REQUIRED
          wpno    ID                       #REQUIRED
          %navlink;
          %tracking;
```

```
%wprsrc-vals;
%wpbodyatt;
%secur;>
```

b. Attributes for ***<maintwp>***:

1. **LEVEL** - The maintenance level of the work package.
   (a) "OPERATOR" - Applies to operator maintenance level.
   (b) "UNITLVL" - Applies to unit maintenance level.
   (c) "DIRSUP" - Applies to direct support (DS) maintenance level.
   (d) "GENSUP" - Applies to general support (GS) maintenance level.
   (e) "INTER" - Applies to intermediate (DS/GS) maintenance level.
   (f) "DEPOT" - Applies to depot maintenance level.
   (g) "AVUM-AVIM" - Applies to aviation unit (AVUM) and intermediate (AVIM) maintenance level.
   (h) "TMLVLS" - Applies to all maintenance levels.
2. **WPNO** - The unique number assigned to this work package by the original developer. This number remains the same when the work package is reused. The work package is referenced through an ID which is (#REQUIRED) and remains with the work package for the work package life. The FOSI generates the work package sequence number. Refer to MIL-STD-40051 Part 1 to obtain the work package number format.
3. **%NAVLINK;** - Refer to common parameter entities for a complete description (see L.5.8).
4. **%TRACKING;** - Refer to common parameter entities for a complete description (see L.5.6).
5. **%WPRSRC-VALS;** - Refer to common parameter entities for a complete description (see L.5.5).
6. **%WPBODYATT;** - Refer to common parameter entities for a complete description (see L.5.4).
7. **%SECUR;** - Refer to common parameter entities for a complete description (see L.5.3).

c. SGML Document Instance Fragment:

```
<maintwp level="operator" wpno="m00003-9-2350-294" changelvl="0" summary-detail="0">
<title><text>REMOVE/INSTALL SKIRT ARMOR PLATES/BRACKET</text></title>
<wpsum>
<para>
<randlist>
<item>Remove <xref wpid="m00003-9-2350-294-01" pretext="(" posttext=")"></item>
<item>Install <xref wpid="m00003-9-2350-294-02" pretext="(" posttext=")"></item>
</randlist>
</para>
</wpsum>
<wpinfo>
<maintlvl level="operator">
<tools>
<setup-item>
```

```
<name><text>Handle, socket wrench, ratchet, 1/2 inch drive </text></name>
<itemref><simref itemid="nsn-5120-00-230-6385" simwp="coeibiiwp"
simid="s00001-9-2350-294"></itemref>
</setup-item>
<setup-item>
<name><text>T-bar handle, socket wrench, 3/4 inch drive </text></name>
<itemref><simref itemid="nsn-5120-00-709-4072" simwp="coeibiiwp"
simid="s00001-9-2350-294"></itemref>
</setup-item>
<setup-item>
<name><text>Impact wrench kit </text></name>
<itemref><simref itemid="nsn-5130-01-299-1675" simwp="coeibiiwp"
simid="s00001-9-2350-294"></itemref>
</setup-item>
<setup-item>
<name><text>Socket, 3/4 inch </text></name>
<itemref><simref itemid="nsn-5120-00-189-7985" simwp="coeibiiwp"
simid="s00001-9-2350-294"></itemref>
</setup-item>
<setup-item>
<name><text>, 15/16 inch </text></name>
<itemref><simref itemid="nsn-5120-00-181-6813" simwp="coeibiiwp"
simid="s00001-9-2350-294"></itemref>
</setup-item>
</tools>
<persnreq>
<setup-item><name><text>Crew </text></name><qty>2</qty></setup-item>
</persnreq>
<eqpconds>
<setup-item>
<name><text>Engine stopped <xref wpid="m00005-9-2350-294" pretext="(" posttext=")"></
text></name>
</setup-item>
</eqpconds>
</wpinfo>
<maintsk>
<remove id="m00003-9-2350-294-01">
<proc>
<step1 id="m00003-9-2350-294-01-01">
<specpara>
<note>
<para>The procedure for removing and installing all 14 skirt armor
plates and 12 brackets is the same.</para>
</note>
```

```
<para>REMOVE SKIRT ARMOR PLATES. HAVE HELPER ASSIST.
<graphic boardno="ev0052ab"><graphic boardno="x1801a35a">
</para>
</specpara>
<step2>
<para>Remove three screws and washers from skirt armor plates.  Use 1/2
inch
drive ratchet and 3/4 inch socket or impact wrench and 3/4 inch
socket.</para>
</step2>
<step2>
<para>Lift skirt armor plates off shouldered screw and remove from
vehicle.
</para>
</step2>
</step1>
<step1 id="m00003-9-2350-294-01-02">
<para>REMOVE BRACKET.<graphic boardno="x1801a36a"></para>
<step2>
<para>Remove three screws, washers, and bracket from vehicle.  Use 3/4
inch
drive T-bar and 15/16 inch socket or impact wrench and 15/16 inch
socket.
</para>
</step2>
</step1>
</proc>
</remove>
<install id="m00003-9-2350-294-02">
<proc>
<step1 id="m00003-9-2350-294-02-01">
<para>INSTALL BRACKET.<graphic boardno="x1801a36a"></para>
<step2>
<para>Install bracket on vehicle and secure with three screws and
washers.
Use 3/4 inch drive T-bar and 15/16 inch socket.</para>
</step2>
</step1>
<step1 id="m00003-9-2350-294-02-02">
<para>INSTALL SKIRT ARMOR PLATES. HAVE HELPER ASSIST.
<graphic boardno="x1801a35a">></para>
<step2>
<para>Place skirt armor plates on shouldered screw.</para>
</step2>
```

```
<step2>
<para>Install three screws and washers on skirt armor plates.  Use
impact wrench
and 3/4 inch socket limiter assembly.</para>
</step2>
</step1>
<step1  id="m00003-9-2350-294-02-03">
<para>NOTIFY UNIT MAINTENANCE TO TORQUE SCREWS.</para>
</step1>
</proc>
</install>
</maintsk>
</maintwp>
```

d. Sample FOSI Output:

TM 9-2350-294-10-1

REMOVE/INSTALL SKIRT ARMOR PLATES/BRACKET — 0020 00

THIS WORK PACKAGE COVERS:

Remove (page 0020 00-1)
Install (page 0020 00-2)

INITIAL SETUP:

Maintenance Level
Operator

Tools and Special Tools
Handle, socket wrench, ratchet, 1/2 inch drive WP 0074 00, Item 3
T-bar handle, socket wrench, 3/4 inch drive WP 0074 00, Item 8
Impact wrench kit WP 0074 00, Item 55
Socket, 3/4 inch WP 0074 00, Item 30
Socket, 15/16 inch WP 0074 00, Item 50

Personnel Required
Crew (2)

Equipment Condition
Engine stopped (WP 0024 00)

REMOVAL

NOTE

The procedure for removing and installing all 14 skirt armor plates and 12 brackets is the same.

1. REMOVE SKIRT ARMOR PLATES. HAVE HELPER ASSIST.

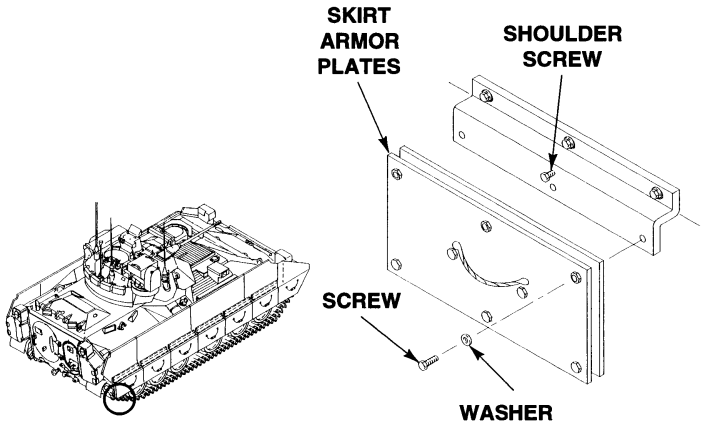

a. Remove three screws and washers from skirt armor plates. Use 1/2 inch drive ratchet and 3/4 inch socket or impact wrench and 3/4 inch socket.

b. Lift skirt armor plates off shouldered screw and remove from vehicle.

Figure 45 Sample <maintwp> FOSI Output

E.3.1.4.1 The element ***<title>***(see L.4.1.5.1) defines the work package title.

E.3.1.4.2 The element ***<wpsum>***(see L.4.6.1) summarizes the procedures in the work package. Refer to the common elements section for a complete description.(see L.4.6.1)

E.3.1.4.3 The element ***<wpinfo>***(see L.4.6.1) identifies the precondition requirements (tools, personnel, etc.) needed. Refer to the common elements section for a complete description.(see L.4.6.2)

E.3.1.4.4 The element warning (***<warning>*** see L.4.1.1.2) is used here to enter a warning regarding the entire work package.

E.3.1.4.5 The element caution (***<caution>*** see L.4.1.1.3) is used here to enter a caution regarding the entire work package.

E.3.1.4.6 The element note (***<note>***see L.4.1.1.4)is used here to enter a note regarding the entire work package.

E.3.1.4.7 The element ***<geninfo>***(see L.4.5.7) is introductory information for the work package.

E.3.1.4.8 The element ***<maintsk>*** is used for all the maintenance tasks that are required to maintain any type of equipment. The element ***<maintsk>*** contains a parameter entity ***%maintsk;*** which contains the following tasks: ***<pshopanal>***, ***<service>***, ***<tow>***, ***<jack>***, ***<park>***, ***<moor>***, ***<cover>***, ***<hoist>***, ***<sling>***, ***<extpwr>***, ***<opchk>***, ***<inspinstitm>***, ***<remove>***, ***<disassem>***, ***<clean>***, ***<acptrejinsp>***, ***<ndti>***, ***<repair-rplc>***, ***<align>***, ***<paint>***, ***<lube>***, ***<assem>***, ***<test-inspect>***, ***<install>***, ***<adjust>***, ***<calibration>***, ***<ris>***, ***<pis>***,***<test-pass>***, ***<ppm>***, ***<orsch>***, ***<pss>***. Warnings (***<warning>*** see L.4.1.1.2), cautions (***<caution>*** see L.4.1.1.3), and/or notes (***<note>*** see L.4.1.1.4) may be entered prior to the maintenance tasks.

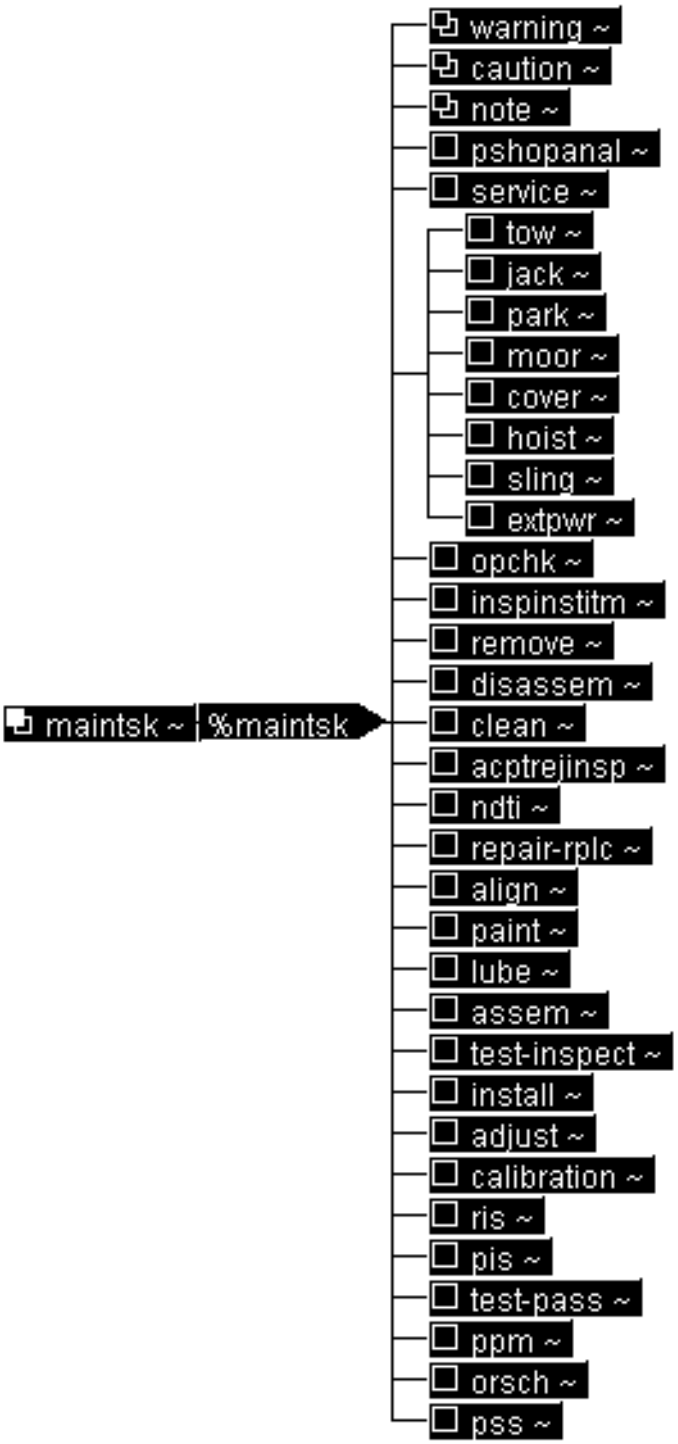

Figure 46 Maintenance Tasks DTD Hierarchy

a. DTD fragment for <***maintsk***> and ***%maintsk;***:

```
<!ELEMENT maintsk - - (%maintsk;)>
<!ATTLIST maintsk
          %navlink;
          %bodyatt;
          %secur;>

<!ENTITY % maintsk "(warning*, caution*, note*, pshopanal?, service?,
                    (%grndhndl;), opchk?, inspinstitm?, remove?,
                    disassem?, clean?, acptrejinsp?, ndti?,
                    repair-rplc?, align?, paint?, lube?, assem?,
                    test-inspect?, install?, adjust?, calibration?,
                    ris?, pis?, test-pass?, ppm?, orsch?, pss?)">

<!ENTITY % grndhndl "(tow?, jack?, park?, moor?,  cover?, hoist?,
                      sling?, extpwr?)">
```

b. Attributes for <***maintsk***>:

1. **%NAVLINK;** - Refer to common parameter entities for a complete description (see L.5.8).
2. **%BODYATT;** - Refer to common parameter entities for a complete description (see L.5.1).
3. **%SECUR;** - Refer to common parameter entities for a complete description (see L.5.3).

E.3.1.4.8.1 The preshop analysis element <***pshopanal***> is a maintenance task used for testing or inspecting an item (component or system), instead of completely disassembling it, to determine its useful life. This element is for depot level equipment manuals only. Optional paragraphs (<***para***> see L.4.1.5.3)precede procedures (<***proc***> see L.4.1.8.1)and/or check lists <***chklist***> (one of which is required).

a. DTD fragment for <***pshopanal***>:

```
<!ELEMENT pshopanal - - (para*, (proc | chklist)+)>
<!ATTLIST pshopanal
          %bodyatt;
          %secur;>
```

b. Attributes for <***pshopanal***>:

1. **%BODYATT;** - Refer to common parameter entities for a complete description (see L.5.1).
2. **%SECUR;** - Refer to common parameter entities for a complete description (see L.5.3).

E.3.1.4.8.1.1 The element <***chklist***> contains a required cover page <***coverpage***>, an explanatory paragraph (<***para***> see L.4.1.5.3), and a required content table <***pshopchk.tab***>.

a. DTD fragment for <***chklist***>:

```
<!ELEMENT chklist - o (coverpage, para,pshopchk.tab)>
<!ATTLIST chklist
          %bodyatt;
```

```
%secur;>
```

b. Attributes for <***chklist***>:

1. **%BODYATT;** - Refer to common parameter entities for a complete description (see L.5.1).
2. **%SECUR;** - Refer to common parameter entities for a complete description (see L.5.3).

E.3.1.4.8.1.1.1 The element <***coverpage***>is used to enter the cover sheet for equipment to be repaired. The part number (<***partno***> see L.4.5.13), serial number (<***serialno***>see E.3.6.1.3.1.1.3), and national stock number (<***nsn***> of the equipment are entered. These are followed by the modifications required <***modreq***>, reason for overhaul or repair <***modreq***>, secondary items required <***secitem***>, and a review of tags <***revtag***>and forms <***revform***>. It also includes the name (<***name***> see L.4.5.11)and signature <***sig***> of the person doing the analysis followed by the date <***date***>of the analysis.

a. DTD fragment for <***coverpage***>:

```
<!ELEMENT coverpage - o (partno, serialno, nsn, modreq, reason, secitem,
                         revtag, revform, name, sig, date)>
<!ATTLIST coverpage
          %bodyatt;
          %secur;>
```

b. Attributes for <***coverpage***>:

1. **%BODYATT;** - Refer to common parameter entities for a complete description (see L.5.1).
2. **%SECUR;** - Refer to common parameter entities for a complete description (see L.5.3).

E.3.1.4.8.1.1.1.1 The modifications required element <***modreq***> includes any modification requirements to be included on the coverpage.

a. DTD fragment for <***modreq***>, <***secitem***>, <***reason***>, <***revtag***>, <***revform***>, and <***sig***>:

```
<!ELEMENT (modreq | secitem | reason |
                    revtag | revform | sig) - o (#PCDATA)>
<!ATTLIST (modreq | secitem | reason |
           revtag | revform | sig)
            %refs;
            %secur;>
```

b. Attributes for <***modreq***>, <***secitem***>, <***reason***>, <***revtag***>, <***revform***>, and <***sig***>:

1. **%REFS;** - Refer to common parameter entities for a complete description (see L.5.2).
2. **%SECUR;** - Refer to common parameter entities for a complete description (see L.5.3).

E.3.1.4.8.1.1.1.2 The element reason <***reason***> is used to enter the reson for overhaul or repair on the coverpage.

a. DTD fragment for <***reason***>: (see E.3.1.4.8.1.1.1.1a.)

b. Attributes for <***reason***>: (see E.3.1.4.8.1.1.1.1b.)

E.3.1.4.8.1.1.1.3 The secondary items element <***secitem***> is used to enter any secondary items on the coverpage.

a. DTD fragment for <***secitem***>: (see E.3.1.4.8.1.1.1.1a.)

b. Attributes for <***secitem***>: (see E.3.1.4.8.1.1.1.1b.)

E.3.1.4.8.1.1.1.4 The review of tags element <***revtag***> includes a review of tags with the item.

a. DTD fragment for <***revtag***>: (see E.3.1.4.8.1.1.1.1a.)

b. Attributes for <***revtag***>: (see E.3.1.4.8.1.1.1.1b.)

E.3.1.4.8.1.1.1.5 The review of forms element <***revform***> includes a review of forms with the item.

a. DTD fragment for <***revform***>: (see E.3.1.4.8.1.1.1.1a.)

b. Attributes for <***revform***>: (see E.3.1.4.8.1.1.1.1b.)

E.3.1.4.8.1.1.1.6 The signature element <***sig***> represents a place for the signature of the person signing the checklist on the coverpage.

a. DTD fragment for <***sig***>: (see E.3.1.4.8.1.1.1.1a.)

b. Attributes for <***sig***>: (see E.3.1.4.8.1.1.1.1b.)

E.3.1.4.8.1.1.2 The preshop checklist table element <***pshopchk.tab***> represents a content tagged table for actions that may need to be made on a particular item prior to entry into the shop. The table can be broken into sections using the title (<***title***> see L.4.1.5.1) and subtitle (<***subtitle***> see L.4.1.5.1)elements. The table contains at least one inspection point <***insppt***>. Each inspection point <***insppt***> is followed by at least one condition <***condition***> and preshop action <***preshopaction***>

a. DTD fragment for <***pshopchk.tab***>:

```
<!ELEMENT pshopchk.tab - o (title, (subtitle, (insppt, (condition,
                                  pshopaction)+)+)+)>
<!ATTLIST pshopchk.tab
          %refs;
          %secur;>
```

b. Attributes for <***pshopchk.tab***>:

1. **%REFS;** - Refer to common parameter entities for a complete description (see L.5.2).
2. **%SECUR;** - Refer to common parameter entities for a complete description (see L.5.3).

E.3.1.4.8.1.1.2.1 The inspection point element <***insppt***> contains the inspection point of the item.

a. DTD fragment for <***insppt***>:

```
<!ELEMENT insppt - o (#PCDATA)>
<!ATTLIST insppt
            %refs;
            %secur;>
```

b. Attibutes for <***insppt***>:

1. **%REFS;** - Refer to common parameter entities for a complete description (see L.5.2).

2. **%SECUR;** - Refer to common parameter entities for a complete description (see L.5.3).

E.3.1.4.8.1.1.2.2 The element condition <***condition***> is used to enter the condition of the item. It contains required text (<***text***> see L.4.1.3.8) which may be followed by a navigational reference (<***navref***> see L.3.6)

a. DTD fragment for <***condition***>:

```
<!ELEMENT condition - o (text, navref?)>
<!ATTLIST insppt
            %navlink;
            %faultstate;
            %refs;
            %secur;>
```

b. Attibutes for <***condition***>:

1. **%NAVLINK;** - Refer to common parameter entities for a complete description (see L.5.8).
2. **%FAULTSTATE;** - Refer to common parameter entities for a complete description (see L.4.7.6).
3. **%REFS;** - Refer to common parameter entities for a complete description (see L.5.2).
4. **%SECUR;** - Refer to common parameter entities for a complete description (see L.5.3).

E.3.1.4.8.1.1.2.3 The preshop action element <***preshopaction***> is used to enter any actions that must be made prior to entry into the shop (***%text;***(see L.3.6) is available to enter inline formatting and contextual characteristics).

a. DTD fragment for <***preshopaction***>:

```
<!ELEMENT pshopaction - o (%text;)>
```

E.3.1.4.8.2 The element <***service***> is a maintenance task used for all instructions for complete servicing of equipment contained within this element. This includes replenishment of fuel, oil, hydraulic or other fluids, oxygen, nitrogen or other gases, and tire pressure. Any other such items and materials required may be included (except for lubricants). The element <***service***> contains paragraphs (<***para***> see L.4.1.5.3), paragraphs with required alert notices (<***specpara***> see L.4.1.1.1), and/or procedural text (<***proc***>see L.4.1.8.1).

a. DTD fragment for <***service***>:

```
<!ELEMENT service - - (para | specpara | proc)+>
<!ATTLIST service
          %navlink;
          %bodyatt;
          %secur;>
```

b. Attributes for <***service***>:

1. **%NAVLINK;** - Refer to common parameter entities for a complete description (see L.5.8).
2. **%BODYATT;** - Refer to common parameter entities for a complete description (see L.5.1).
3. **%SECUR;** - Refer to common parameter entities for a complete description (see L.5.3).

E.3.1.4.8.3 The element <***tow***> is a maintenance task used for towing the equipment and includes all safety requirements related to towing of equipment. The element <***tow***> (***%text;***(see L.3.6) is available to enter inline formatting and contextual characteristics).

a. DTD fragment for <***tow***>:

```
<!ELEMENT tow  - - (proc | (subtitle?, (para | specpara)+)+) >
<!ATTLIST tow
          %navlink;
          %nodeloc;
          %bodyatt;
          %secur;>
```

b. Attributes for <***tow***>:

1. **%NAVLINK;** - Refer to common parameter entities for a complete description (see L.5.8).
2. **%NODELOC;** - Refer to common parameter entities for a complete description (see L.5.9).
3. **%BODYATT;** - Refer to common parameter entities for a complete description (see L.5.1).
4. **%SECUR;** - Refer to common parameter entities for a complete description (see L.5.3).

E.3.1.4.8.4 The element <***jack***> is a maintenance task used for the jacking which includes procedures for blocking, supporting, and shoring the equipment. The element <***jack***> may contain procedural text (<***proc***>see L.4.1.8.1) or paragraphs (<***para***> see L.4.1.5.3) and/or paragraphs with required alert notices (<***specpara***> see L.4.1.1.1) each of which may be followed by a subtitle (<***subtitle***>see L.4.1.5.2).

a. DTD fragment for <***jack***>:

```
<!ELEMENT jack   - - (proc | (subtitle?, (para | specpara)+)+) >
<!ATTLIST jack
          %navlink;
          %nodeloc;
          %bodyatt;
          %secur;>
```

b. Attributes for <***jack***>:

1. **%NAVLINK;** - Refer to common parameter entities for a complete description (see L.5.8).
2. **%NODELOC;** - Refer to common parameter entities for a complete description (see L.5.9).
3. **%BODYATT;** - Refer to common parameter entities for a complete description (see L.5.1).
4. **%SECUR;** - Refer to common parameter entities for a complete description (see L.5.3).

E.3.1.4.8.5 The element <***park***> is used for maintenance task containing procedures for parking the equipment at a site. Procedures for use of parking brakes, control locks, and chocks are included. The element <***park***> may contain procedural text (<***proc***>see L.4.1.8.1) or paragraphs (<***para***> see L.4.1.5.3) and/or paragraphs with required alert notices (<***specpara***> see L.4.1.1.1) each of which may be followed by a subtitle (<***subtitle***>see L.4.1.5.2).

a. DTD fragment for <***park***>:

```
<!ELEMENT park   - - (proc | (subtitle?, (para | specpara)+)+) >
<!ATTLIST park
          %navlink;
          %nodeloc;
          %bodyatt;
          %secur;>
```

b. Attributes for <***park***>:

1. **%NAVLINK;** - Refer to common parameter entities for a complete description (see L.5.8).
2. **%NODELOC;** - Refer to common parameter entities for a complete description (see L.5.9).
3. **%BODYATT;** - Refer to common parameter entities for a complete description (see L.5.1).
4. **%SECUR;** - Refer to common parameter entities for a complete description (see L.5.3).

E.3.1.4.8.6 The element <***moor***> is used for the maintenance task containing procedures for mooring or securing the equipment at a site; it includes procedures for using tiedown cables or other mooring devices. The element <***moor***> may contain procedural text (<***proc***>see L.4.1.8.1) or paragraphs (<***para***> see L.4.1.5.3) and/or paragraphs with required alert notices (<***specpara***> see L.4.1.1.1) each of which may be followed by a subtitle (<***subtitle***>see L.4.1.5.2).

a. DTD fragment for <***moor***>:

```
<!ELEMENT moor   - - (proc | (subtitle?, (para | specpara)+)+) >
<!ATTLIST moor
          %navlink;
          %nodeloc;
          %bodyatt;
          %secur;>
```

b. Attributes for <***moor***>:

1. **%NAVLINK;** - Refer to common parameter entities for a complete description (see L.5.8).
2. **%NODELOC;** - Refer to common parameter entities for a complete description (see L.5.9).
3. **%BODYATT;** - Refer to common parameter entities for a complete description (see L.5.1).
4. **%SECUR;** - Refer to common parameter entities for a complete description (see L.5.3).

E.3.1.4.8.7 The element <***cover***> is a maintenance task used for the installation of covers that will protect the equipment from damage or adverse weather conditions. The element <***cover***> may contain procedural text (<***proc***>see L.4.1.8.1) or paragraphs (<***para***> see L.4.1.5.3) and/or paragraphs with required alert notices (<***specpara***> see L.4.1.1.1) each of which may be followed by a subtitle (<***subtitle***>see L.4.1.5.2).

a. DTD fragment for <***cover***>:

```
<!ELEMENT cover  - - (proc | (subtitle?, (para | specpara)+)+) >
<!ATTLIST cover
          %navlink;
          %nodeloc;
          %bodyatt;
```

```
%secur;>
```

b. Attributes for <***cover***>:

1. **%NAVLINK;** - Refer to common parameter entities for a complete description (see L.5.8).
2. **%NODELOC;** - Refer to common parameter entities for a complete description (see L.5.9).
3. **%BODYATT;** - Refer to common parameter entities for a complete description (see L.5.1).
4. **%SECUR;** - Refer to common parameter entities for a complete description (see L.5.3).

E.3.1.4.8.8 The element <***hoist***> is the maintenance task used for hoisting procedures for aircraft with shrink film covering installed. The element <***hoist***> may contain procedural text (<***proc***>see L.4.1.8.1) or paragraphs (<***para***> see L.4.1.5.3) and/or paragraphs with required alert notices (<***specpara***> see L.4.1.1.1) each of which may be followed by a subtitle (<***subtitle***>see L.4.1.5.2).

a. DTD fragment for <***hoist***>:

```
<!ELEMENT hoist  - - (proc | (subtitle?, (para | specpara)+)+) >
<!ATTLIST hoist
          %navlink;
          %nodeloc;
          %bodyatt;
          %secur;>
```

b. Attributes for <***hoist***>:

1. **%NAVLINK;** - Refer to common parameter entities for a complete description (see L.5.8).
2. **%NODELOC;** - Refer to common parameter entities for a complete description (see L.5.9).
3. **%BODYATT;** - Refer to common parameter entities for a complete description (see L.5.1).
4. **%SECUR;** - Refer to common parameter entities for a complete description (see L.5.3).

E.3.1.4.8.9 The element <***sling***> is the maintenance task used for lifting or moving equipment by using a sling. Maintenance tasks must include all safety requirements. The element <***sling***> may contain procedural text (<***proc***>see L.4.1.8.1) or paragraphs (<***para***> see L.4.1.5.3) and/or paragraphs with required alert notices (<***specpara***> see L.4.1.1.1) each of which may be followed by a subtitle (<***subtitle***>see L.4.1.5.2).

a. DTD fragment for <***sling***>:

```
<!ELEMENT sling  - - (proc | (subtitle?, (para | specpara)+)+) >
<!ATTLIST sling
          %navlink;
          %nodeloc;
          %bodyatt;
          %secur;>
```

b. Attributes for <***sling***>:

1. **%NAVLINK;** - Refer to common parameter entities for a complete description (see L.5.8).
2. **%NODELOC;** - Refer to common parameter entities for a complete description (see L.5.9).
3. **%BODYATT;** - Refer to common parameter entities for a complete description (see L.5.1).

4. **%SECUR;** - Refer to common parameter entities for a complete description (see L.5.3).

E.3.1.4.8.10 The element <***extpwr***> external power is the maintenance task containing procedures for connecting electrical power to the equipment. The element <***extpwr***> may contain procedural text (<***proc***>see L.4.1.8.1) or paragraphs (<***para***> see L.4.1.5.3) and/or paragraphs with required alert notices (<***specpara***> see L.4.1.1.1) each of which may be followed by a subtitle (<***subtitle***>see L.4.1.5.2).

a. DTD fragment for <***extpwr***>:

```
<!ELEMENT extpwr - - (proc | (subtitle?, (para | specpara)+)+) >
<!ATTLIST extpwr
          %navlink;
          %nodeloc;
          %bodyatt;
          %secur;>
```

b. Attributes for <***extpwr***>:

1. **%NAVLINK;** - Refer to common parameter entities for a complete description (see L.5.8).
2. **%NODELOC;** - Refer to common parameter entities for a complete description (see L.5.9).
3. **%BODYATT;** - Refer to common parameter entities for a complete description (see L.5.1).
4. **%SECUR;** - Refer to common parameter entities for a complete description (see L.5.3).

E.3.1.4.8.11 The element <***opchk***> is used for the maintenance task used for an operational check on the equipment to verify satisfactory performance. This element references the operator's instructions for operational checks and provides a means to reference the troubleshooting procedures. The element <***opchk***> may contain paragraphs (<***para***> see L.4.1.5.3), paragraphs with required alert notices (<***specpara***> see L.4.1.1.1), and/or procedural text (<***proc***>see L.4.1.8.1).

a. DTD fragment for <***opchk***>:

```
<!ELEMENT opchk - - (para | specpara | proc)+>
<!ATTLIST opchk
          %navlink;
          %bodyatt;
          %secur;>
```

b. Attributes for <***opchk***>:

1. **%NAVLINK;** - Refer to common parameter entities for a complete description (see L.5.8).
2. **%BODYATT;** - Refer to common parameter entities for a complete description (see L.5.1).
3. **%SECUR;** - Refer to common parameter entities for a complete description (see L.5.3).

E.3.1.4.8.12 The element <***inspinstitm***> (inspection of installed items) is used for the maintenance task containing the procedures for inspection of components and assemblies installed on the equipment to determine if the item is damaged, deteriorated or missing. The element <***inspinstitm***> may contain paragraphs (<***para***> see L.4.1.5.3), paragraphs with required alert notices (<***specpara***> see L.4.1.1.1), and/or procedural text (<***proc***>see L.4.1.8.1).

a. DTD fragment for <***inspinstitm***>:

```
<!ELEMENT inspinstitm - - (para | specpara | proc)+>
<!ATTLIST inspinstitm
          %bodyatt;
          %secur;>
```

b. Attributes for <***inspinstitm***>:

1. **%BODYATT;** - Refer to common parameter entities for a complete description (see L.5.1).
2. **%SECUR;** - Refer to common parameter entities for a complete description (see L.5.3).

E.3.1.4.8.13 The element <***remove***> is used for the maintenance task containing procedures for removal of an assembly or component. The element <***remove***> contains an optional figure (<***figure***> see L.4.4.1) followed by procedure text (<***proc***> see L.4.1.8.1)and/or tables (<***table***> see L.4.2.1).

a. DTD fragment for <***remove***>:

```
<!ELEMENT remove - - (figure?, (proc | table)+)>
<!ATTLIST remove
          %navlink;
          %bodyatt;
          %secur;>
```

b. Attributes for <***remove***>:"

1. **%NAVLINK;** - Refer to common parameter entities for a complete description (see L.5.8).
2. **%BODYATT;** - Refer to common parameter entities for a complete description (see L.5.1).
3. **%SECUR;** - Refer to common parameter entities for a complete description (see L.5.3).

E.3.1.4.8.14 The element <***disassem***> is the maintenance task containing procedures regarding the disassemby of an assembly, subassembly or component to the extent authorized by the maintenance allocation chart (MAC) and source maintenance and recoverability code (SMR). The element <***disassem***> contains procedural text (<***proc***> see L.4.1.8.1). A figure (<***figure***> see L.4.4.1) may be entered prior to the procedure when it is beneficial to clarify the disassembly.

a. DTD fragment for <***disassem***>:

```
<!ELEMENT disassem - - (figure?, proc)+>
<!ATTLIST disassem
          %navlink;
          %bodyatt;
          %secur;>
```

b. Attributes for <***disassem***>:

1. **%NAVLINK;** - Refer to common parameter entities for a complete description (see L.5.8).
2. **%BODYATT;** - Refer to common parameter entities for a complete description (see L.5.1).
3. **%SECUR;** - Refer to common parameter entities for a complete description (see L.5.3).

E.3.1.4.8.15 The element <***clean***> is used for the maintenance task containing procedures for maintaining corrosion control of equipment and metal parts. The element <***clean***> contains procedural text <***proc***> see L.4.1.8.1).

a. DTD fragment for <***clean***>:

```
<!ELEMENT clean - - (proc)+>
<!ATTLIST clean
          %navlink;
          %bodyatt;
          %secur;>
```

b. Attributes for <***clean***>:

1. **%NAVLINK;** - Refer to common parameter entities for a complete description (see L.5.8).
2. **%BODYATT;** - Refer to common parameter entities for a complete description (see L.5.1).
3. **%SECUR;** - Refer to common parameter entities for a complete description (see L.5.3).

E.3.1.4.8.16 The element <***acptrejinsp***> is the maintenance task used for inspection-acceptance/rejection information required to determine the serviceability of the ammunition or related equipment within an ammunitions work package. The element <***acptrejinsp***> contains paragraphs (<***para***> see L.4.1.5.3) and/or procedural text <***proc***> see L.4.1.8.1).

a. DTD fragment for <***acptrejinsp***>:

```
<!ELEMENT acptrejinsp - - (para | proc)+>
<!ATTLIST acptrejinsp
          %navlink;
          %bodyatt;
          %secur;>
```

b. Attributes for <***acptrejinsp***>:

1. **%NAVLINK;** - Refer to common parameter entities for a complete description (see L.5.8).
2. **%BODYATT;** - Refer to common parameter entities for a complete description (see L.5.1).
3. **%SECUR;** - Refer to common parameter entities for a complete description (see L.5.3).

E.3.1.4.8.17 The element <***ndti***> Nondestructive Testing Inspection (NDTI) is used for the maintenance task containing procedures for inspecting an item using a special method that will not damage the item but will show a hard to find defect. This element is for aircraft only. The element <***ndti***> may contain paragraphs (<***para***> see L.4.1.5.3), paragraphs with required alert notices (<***specpara***> see L.4.1.1.1), and/or procedural text (<***proc***>see L.4.1.8.1).

a. DTD fragment for <***ndti***>:

```
<!ELEMENT ndti - - (para | specpara | proc)+>
<!ATTLIST ndti
          %bodyatt;
          %secur;>
```

b. Attributes for <***ndti***>:

1. **%BODYATT;** - Refer to common parameter entities for a complete description (see L.5.1).
2. **%SECUR;** - Refer to common parameter entities for a complete description (see L.5.3).

E.3.1.4.8.18 The element <***repair-rplc***> repair or replacement is used for the maintenance task containing procedures for repair of a part or replacement of a new or serviceable part. Information on tolerances, torque values, clearance, and other similar data are included within this element. The element <***repair-rplc***> contains multiple procedures (<***proc***> see L.4.1.8.1).

a. DTD fragment for <***repair-rplc***>:

```
<!ELEMENT repair-rplc - - (proc)+>
<!ATTLIST repair-rplc
          %navlink;
          %bodyatt;
          %secur;>
```

b. Attributes for <***repair-rplc***>:

1. **%NAVLINK;** - Refer to common parameter entities for a complete description (see L.5.8).
2. **%BODYATT;** - Refer to common parameter entities for a complete description (see L.5.1).
3. **%SECUR;** - Refer to common parameter entities for a complete description (see L.5.3).

E.3.1.4.8.19 The element <***align***> is used for the alignment maintenance task containing procedures to adjust specified variable elements to bring about optimum or desired performance. The element <***align***> contains multiple procedures <***proc***> see L.4.1.8.1).

a. DTD fragment for <***align***>:

```
<!ELEMENT align - - (proc)+>
<!ATTLIST align
          %navlink;
          %bodyatt;
          %secur;>
```

b. Attributes for <***align***>:

1. **%NAVLINK;** - Refer to common parameter entities for a complete description (see L.5.8).
2. **%BODYATT;** - Refer to common parameter entities for a complete description (see L.5.1).
3. **%SECUR;** - Refer to common parameter entities for a complete description (see L.5.3).

E.3.1.4.8.20 The element <***paint***> is used for maintenance task containing procedures for painting. References to applicable documents that contain these procedures may be made. The element <***paint***> contains multiple procedures (<***proc***> see L.4.1.8.1).

a. DTD fragment for <***paint***>:

```
<!ELEMENT paint - - (proc)+>
<!ATTLIST paint
          %bodyatt;
          %secur;>
```

b. Attributes for <***paint***>:

1. **%BODYATT;** - Refer to common parameter entities for a complete description (see L.5.1)..

2. **%SECUR;** - Refer to common parameter entities for a complete description (see L.5.3).

E.3.1.4.8.21 The element <***lube***> is used for maintenance task specifying the lubrication of equipment. The element <***lube***> contains multiple procedures (<***proc***>see L.4.1.8.1).

a. DTD fragment for <***lube***>:

```
<!ELEMENT lube - - (proc)+>
<!ATTLIST lube
          %navlink;
          %bodyatt;
          %secur;>
```

b. Attributes for <***lube***>:

1. **%NAVLINK;** - Refer to common parameter entities for a complete description (see L.5.8).
2. **%BODYATT;** - Refer to common parameter entities for a complete description (see L.5.1).
3. **%SECUR;** - Refer to common parameter entities for a complete description (see L.5.3).

E.3.1.4.8.22 The element <***assem***> is the maintenance task containing procedures regarding the assemby of an item, subassembly or component. The element <***assem***> contains procedural text (<***proc***> see L.4.1.8.1). A figure (<***figure***> see L.4.4.1) may be entered prior to the procedure when it is beneficial to clarify the assembly.

a. DTD fragment for <***assem***>:

```
<!ELEMENT assem - - (figure?, proc)+>
<!ATTLIST assem
          %navlink;
          %bodyatt;
          %secur;>
```

b. Attributes for <***assem***>:

1. **%NAVLINK;** - Refer to common parameter entities for a complete description (see L.5.8).
2. **%BODYATT;** - Refer to common parameter entities for a complete description (see L.5.1).
3. **%SECUR;** - Refer to common parameter entities for a complete description (see L.5.3)..

E.3.1.4.8.23 The element <***test-inspect***> is a maintenance task for testing and inspection during or after assembly of an item to ensure proper assembly. The element includes procedures for checking tolerances, back play, clearances and other similar data. The element <***test-inspect***> contains multiple procedures (<***proc***>see L.4.1.8.1). The content tagged table <***defect.tab***> may be included within this element.

a. DTD fragment for <***test-inspect***>:

```
<!ELEMENT test-inspect - - (proc)+ +(defect.tab)>
<!ATTLIST test-inspect
          %navlink;
          %bodyatt;
          %secur;>
```

b. Attributes for <***test-inspect***>:

1. **%NAVLINK;** - Refer to common parameter entities for a complete description (see L.5.8).
2. **%BODYATT;** - Refer to common parameter entities for a complete description (see L.5.1).
3. **%SECUR;** - Refer to common parameter entities for a complete description (see L.5.3).

E.3.1.4.8.23.1 The defect table element <***defect.tab***> is a content tagged table that may occur within <***test-inspect***>. It contains a required title (<***title***> see L.4.1.5.1) followed by groupings of component assemblies <***compnt-assem***>. Each component assembly <***compnt-assem***> is followed by the type of defect <***defecttype***>, the condition <***condition***>, a cross reference (<***xref***> or external reference <***extref***>, the action required <***actionreq***>, and the acceptance quality required <***acceptqual***>. If there is more than one defect for a component assembly, this grouping may be repeated.

a. DTD fragment for <***defect.tab***>:

```
<!ELEMENT defect.tab - o (title, (compnt-assem, (defecttype, (condition,
                         (xref | extref), actionreq, acceptqual)+)+)+)>
```

E.3.1.4.8.23.1.1 The component assembly element <***compnt-assem***> (see E.3.1.1.6.3.2.1.3) is used to enter the component assembly (***%text;***(see L.3.6) is available to enter inline formatting and contextual characteristics).

E.3.1.4.8.23.1.2 The element <***defecttype***> identifies the type of defect for the component.

a. DTD fragment for <***defecttype***>:

```
<!ELEMENT defecttype - o EMPTY>
<!ATTLIST defecttype
          type (critical | major | minor) #REQUIRED >
```

b. Attributes for <***defecttype***>:

1. **TYPE** - Specifies the type of defect. It is required to enter one of the following defect types:
   (a) “CRITICAL” - Indicates the defect type is critical.
   (b) “MAJOR” - Indicates the defect type is major.
   (c) “MINOR” - Indicates the defect type is minor.

E.3.1.4.8.23.1.3 The element <***condition***> (see E.3.1.4.8.1.1.2.2) identifies the expected conditions that must be satisfied.

E.3.1.4.8.23.1.4 The element <***actionreq***> identifies the required action to be performed to correct the defect (***%text;***(see L.3.6) is available to enter inline formatting and contextual characteristics).

a. DTD fragment for <***actionreq***>:

```
<!ELEMENT actionreq - o (%text;)>
<!ATTLIST actionreq
          %bodyatt;
          %secur; >
```

b. Attributes for <***actionreq***>:

1. **%BODYATT;** - Refer to common parameter entities for a complete description (see L.5.1).

2. **%SECUR;** - Refer to common parameter entities for a complete description (see L.5.3).

E.3.1.4.8.23.1.5 The element <***acceptqual***> identifies the acceptance quality required for the component assembly (***%text;***(see L.3.6) is available to enter inline formatting and contextual characteristics).

a. DTD fragment for <***acceptqual***>:

```
<!ELEMENT acceptqual - o (%text;)>
```

E.3.1.4.8.24 The element <***install***> is used for the maintenance task containing necessary instructions for proper installation of equipment. The use of tools, necessary interconnections, and procedures to lubricate, calibrate and adjust equipment are included within this element. The element <***install***> contains a table <***table***> or paragraphs (<***para***> see L.4.1.5.3), paragraphs with required alert notices (<***specpara***> see L.4.1.1.1), and/or procedural text (<***proc***>see L.4.1.8.1)elements section for a complete description of these elements.

a. DTD fragment for <***install***>:

```
<!ELEMENT install - - ((para | specpara | proc)+ | table)>
<!ATTLIST install
          %bodyatt;
          %secur;>
```

b. Attributes for <***install***>:

1. **%BODYATT;** - Refer to common parameter entities for a complete description (see L.5.1).
2. **%SECUR;** - Refer to common parameter entities for a complete description (see L.5.3).

E.3.1.4.8.25 The element <***adjust***> is a maintenance task containing procedures for adjustments that may be required prior to operating a part, system or end item. The element <***adjust***> contains multiple procedures (<***proc***> paragraph see L.4.1.8.1).

a. DTD fragment for <***adjust***>:

```
<!ELEMENT adjust - - (proc)+>
<!ATTLIST adjust
          %navlink;
          %bodyatt;
          %secur;>
```

b. Attributes for <***adjust***>:

1. **%NAVLINK;** - Refer to common parameter entities for a complete description (see L.5.8).
2. **%BODYATT;** - Refer to common parameter entities for a complete description (see L.5.1).
3. **%SECUR;** - Refer to common parameter entities for a complete description (see L.5.3).

E.3.1.4.8.26 The element <***calibration***> is a maintenance task containing procedures for any calibration which may occur after an assembly or an installation. References to applicable publications containing the calibration procedure may be entered. The element <***calibration***> contains multiple procedures (<***proc***>see L.4.1.8.1).

a. DTD fragment for <***calibration***>:

```
<!ELEMENT calibration - - (proc)+>
<!ATTLIST calibration
          %navlink;
          %bodyatt;
          %secur;>
```

b. Attributes for <***calibration***>:

1. **%NAVLINK;** - Refer to common parameter entities for a complete description (see L.5.8).
2. **%BODYATT;** - Refer to common parameter entities for a complete description (see L.5.1).
3. **%SECUR;** - Refer to common parameter entities for a complete description (see L.5.3).

E.3.1.4.8.27 The element <***ris***> is a maintenance task containing radio suppression procedures or removal and replacement of defective components. The element <***ris***> contains paragraphs (<***para***> see L.4.1.5.3), paragraphs with required alert notices (<***specpara***> see L.4.1.1.1), and/or procedural text (<***proc***>see L.4.1.8.1).

a. DTD fragment for <***ris***>:

```
<!ELEMENT ris - - (para | specpara | proc)+>
<!ATTLIST ris
          %bodyatt;
          %secur;>
```

b. Attributes for <***ris***>:

1. **%BODYATT;** - Refer to common parameter entities for a complete description (see L.5.1).
2. **%SECUR;** - Refer to common parameter entities for a complete description (see L.5.3).

E.3.1.4.8.28 The element <***pis***> (placing in service) is a maintenance task for removal of an item from storage, installation, final servicing checks, calibration, testing or any other procedure required to place an item in service that is not covered elsewhere. The element <***pis***> contains paragraphs (<***para***> see L.4.1.5.3), paragraphs with required alert notices (<***specpara***> see L.4.1.1.1), and/or procedural text (<***proc***>see L.4.1.8.1).

a. DTD fragment for <***pis***>:

```
<!ELEMENT pis - - (para | specpara | proc)+>
<!ATTLIST pis
          %bodyatt;
          %secur;>
```

b. Attributes for <***pis***>:

1. **%BODYATT;** - Refer to common parameter entities for a complete description (see L.5.1).
2. **%SECUR;** - Refer to common parameter entities for a complete description (see L.5.3).

E.3.1.4.8.29 The element <***test-pass***> is a maintenance task containing the testing procedures for performance of compounds, assemblies and subassemblies prior to installation in the end-item. The element <***test-pass***> contains paragraphs (<***para***> see L.4.1.5.3), paragraphs with required alert notices (<***specpara***> see L.4.1.1.1), and/or procedural text (<***proc***>see L.4.1.8.1).

a. DTD fragment for <***test-pass***>:

```
<!ELEMENT test-pass - - (para | specpara | proc)+>
<!ATTLIST test-pass
          %navlink;
          %bodyatt;
          %secur;>
```

b. Attributes for <***test-pass***>:

1. **%NAVLINK;** - Refer to common parameter entities for a complete description (see L.5.8).
2. **%BODYATT;** - Refer to common parameter entities for a complete description (see L.5.1).
3. **%SECUR;** - Refer to common parameter entities for a complete description (see L.5.3).

E.3.1.4.8.30 The element <***ppm***> is a maintenance task containing instructions for special or unique preservation, packaging, or markings that apply to equipment. The Army Master Data File (AMDF) Retrieval Microform System for normal packaging procedures may be referenced within this element. This element is for depot equipment level only. The element <***ppm***> contains multiple procedures <***proc***> (see L.4.1.8.1).

a. DTD fragment for <***ppm***>:

```
<!ELEMENT ppm - - (proc)+>
<!ATTLIST ppm
          %bodyatt;
          %secur;>
```

b. Attributes for <***ppm***>:

1. **%BODYATT;** - Refer to common parameter entities for a complete description (see L.5.1).
2. **%SECUR;** - Refer to common parameter entities for a complete description (see L.5.3).

E.3.1.4.8.31 The element <***orsch***> is a maintenance task containing a list of equipment and their overhaul/ retirement schedule. An entity reference may be made to TM 1-1500-328-25. The element <***orsch***> contains paragraphs (<***para***> see L.4.1.5.3), paragraphs with required alert notices (<***specpara***> see L.4.1.1.1), and/or procedural text (<***proc***>see L.4.1.8.1).

a. DTD fragment for <***orsch***>:

```
<!ELEMENT orsch - - (para | specpara | proc)+>
<!ATTLIST orsch
          %bodyatt;
          %secur;>
```

b. Attributes for <***orsch***>:

1. **%BODYATT;** - Refer to common parameter entities for a complete description (see L.5.1).
2. **%SECUR;** - Refer to common parameter entities for a complete description (see L.5.3).

E.3.1.4.8.32 The element <***pss***> is a maintenance task containing procedures for storage or shipment preparation, including all special security procedures, special transportation procedures for sensitive items and administrative storage as required by applicable AR. It also includes a reference to special aircraft procedures in accordance with MIL-M-63005 and aircraft support equipment storage/shipment in accordance with TM 55-1500-204-25/1. The element <***pss***> contains paragraphs (<***para***> see L.4.1.5.3), paragraphs with required alert notices (<***specpara***> see L.4.1.1.1), and/or procedural text (<***proc***>see L.4.1.8.1).

a. DTD fragment for <***pss***>:

```
<!ELEMENT pss - - (para | specpara | proc)+>
<!ATTLIST pss
          %navlink;
          %bodyatt;
          %secur;>
```

b. Attributes for <***pss***>:

1. **%NAVLINK;** - Refer to common parameter entities for a complete description (see L.5.8).
2. **%BODYATT;** - Refer to common parameter entities for a complete description (see L.5.1).
3. **%SECUR;** - Refer to common parameter entities for a complete description (see L.5.3).

E.3.1.5 **Phased Maintenance Inspections Work Package <*pmiwp*>.** The element <***pmiwp***> is used for data required to perform phased maintenance inspections on aircraft. This work package is for aircraft only. There may be more than one phased maintenance inspections work package in the maintenance information module. The phased maintenance inspections work package is subdivided into the following elements and content requirements:

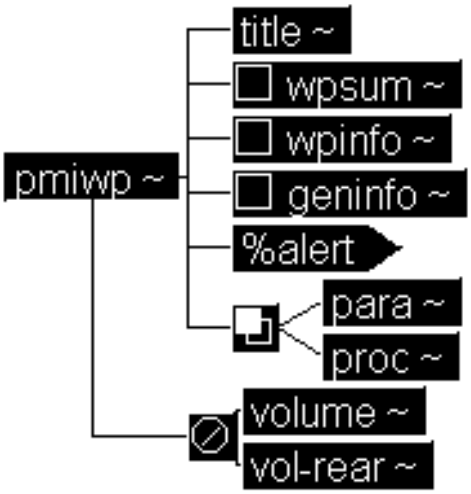

Figure 47 Phased Maintenance Inspections Work Package DTD Hierarchy

a. DTD fragment for <***pmiwp***>:

```
<!ELEMENT pmiwp - - (title, wpsum?, wpinfo?, geninfo?, %alert;, (para |
                    proc)+) -(%vol.group;)>
<!ATTLIST pmiwp
          level       (depot | operator |
                      gensup | dirsup |
                      unitlvl | inter)    #REQUIRED
          %navlink;
          wpno        ID                  #REQUIRED
```

```
%tracking;
%wprsrc-vals;
%wpbodyatt;
%secur;>
```

b. Attributes for <***pmiwp***>:

1. **LEVEL** - The maintenance level of the work package.
   (a) "OPERATOR" - Applies to operator maintenance level.
   (b) "UNITLVL" - Applies to unit maintenance level.
   (c) "DIRSUP" - Applies to direct support (DS) maintenance level.
   (d) "GENSUP" - Applies to general support (GS) maintenance level.
   (e) "INTER" - Applies to intermediate (DS/GS) maintenance level.
   (f) "DEPOT" - Applies to depot maintenance level.
   (g) "AVUM-AVIM" - Applies to aviation unit (AVUM) and intermediate (AVIM) maintenance level.
   (h) "TMLVLS" - Applies to all maintenance levels.
2. **%NAVLINK;** - Refer to common parameter entities for a complete description (see L.5.8).
3. **WPNO** - The unique number assigned to this work package by the original developer. This number remains the same when the work package is reused. The work package is referenced through an ID which is (#REQUIRED) and remains with the work package for the work package life. The FOSI generates the work package sequence number. Refer to MIL-STD-40051 Part 1 to obtain the work package number format.
4. **%TRACKING;** - Refer to common parameter entities for a complete description (see L.5.6).
5. **%WPRSRC-VALS;** - Refer to common parameter entities for a complete description (see L.5.5).
6. **%WPBODYATT;** - Refer to common parameter entities for a complete description (see L.5.4).
7. **%SECUR;** - Refer to common parameter entities for a complete description (see L.5.3).

E.3.1.5.1 The element <***title***>(see L.4.1.5.1) defines the work package title.

E.3.1.5.2 The element <***wpsum***>(see L.4.6.1) summarizes the procedures in the work package. Refer to the common elements section for a complete description.(see L.4.6.1)

E.3.1.5.3 The element <***wpinfo***>(see L.4.6.1) identifies the precondition requirements (tools, personnel, etc.) needed. Refer to the common elements section for a complete description.(see L.4.6.2)

E.3.1.5.4 The element <***geninfo***>(see L.4.5.7) is introductory information for the work package.

E.3.1.5.5 The parameter entity ***%alert;*** (see L.3.2) is the necessary alert notices.

E.3.1.5.6 Paragraphs of text (<***para***>see L.4.1.5.3) may be entered.

E.3.1.5.7 Procedural text (<***proc***>see L.4.1.8.1) may be entered.

E.3.1.6 **Lubrication Instructions Work Package <*lubewp*>.** The element <***lubewp***> is used for all of the data required to lubricate an aircraft and is contained within the aircraft lubrication instructions work package. This work package is for aircraft only. There may be more than one aircraft lubrications instructions work

package within a maintenance information module. The lubrications instructions work package is subdivided into the following elements and content requirements:

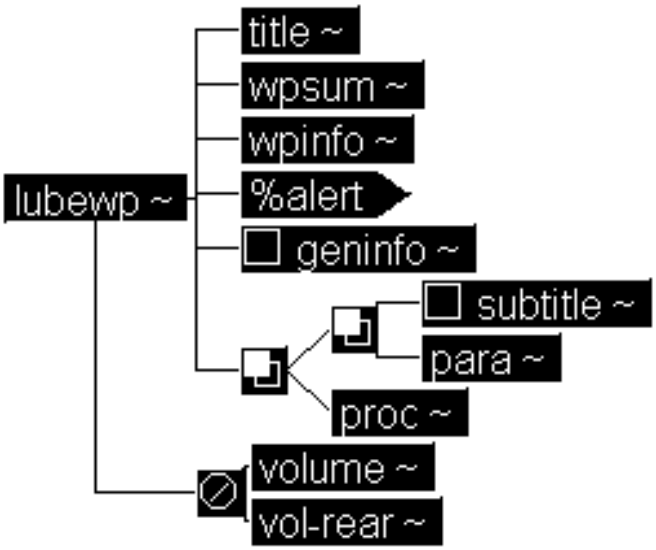

Figure 48 Lubrication Instructions Work Package DTD Hierarchy

a. DTD fragment for <***lubewp***>:

```
<!ELEMENT lubewp - - (title, wpsum, wpinfo, %alert;, geninfo?,
                      ((subtitle?, para)+ | proc)+) -(%vol.group;)>
<!ATTLIST lubewp     level     (depot | operator | gensup | dirsup |
                               unitlvl | inter)    #REQUIRED
          wpno       ID                            #REQUIRED
          %navlink;
          %tracking;
          %wprsrc-vals;
          %wpbodyatt;
          %secur;>
```

b. Attributes for <***lubewp***>:

1. **LEVEL** - The maintenance level of the work package.
   (a) “OPERATOR” - Applies to operator maintenance level.
   (b) “UNITLVL” - Applies to unit maintenance level.
   (c) “DIRSUP” - Applies to direct support (DS) maintenance level.
   (d) “GENSUP” - Applies to general support (GS) maintenance level.
   (e) “INTER” - Applies to intermediate (DS/GS) maintenance level.
   (f) “DEPOT” - Applies to depot maintenance level.
   (g) “AVUM-AVIM” - Applies to aviation unit (AVUM) and intermediate (AVIM) maintenance level.

(h) “TMLVLS” - Applies to all maintenance levels.

2. **WPNO** - The unique number assigned to this work package by the original developer. This number remains the same when the work package is reused. The work package is referenced through an ID which is (#REQUIRED) and remains with the work package for the work package life. The FOSI generates the work package sequence number. Refer to MIL-STD-40051 Part 1 to obtain the work package number format.
3. **%NAVLINK;** - Refer to common parameter entities for a complete description (see L.5.8).
4. **%TRACKING;** - Refer to common parameter entities for a complete description (see L.5.6).
5. **%WPRSRC-VALS;** - Refer to common parameter entities for a complete description (see L.5.5).
6. **%WPBODYATT;** - Refer to common parameter entities for a complete description (see L.5.4).
7. **%SECUR;** - Refer to common parameter entities for a complete description (see L.5.3).

E.3.1.6.1 The element <***title***>(see L.4.1.5.1) defines the work package title.

E.3.1.6.2 The element <***wpsum***>(see L.4.6.1) summarizes the procedures in the work package. Refer to the common elements section for a complete description.(see L.4.6.1)

E.3.1.6.3 The element <***wpinfo***>(see L.4.6.1) identifies the precondition requirements (tools, personnel, etc.) needed. Refer to the common elements section for a complete description.(see L.4.6.2)

E.3.1.6.4 The element <***geninfo***>(see L.4.5.7) is introductory information for the work package.

E.3.1.6.5 The parameter entity ***%alert;*** (see L.3.2) is the necessary alert notices.

E.3.1.6.6 Paragraphs of text (<***para***>see L.4.1.5.3) may be entered. These paragraphs may be placed in sections using the subtitle element (<***subtitle***> see L.4.1.5.2)

E.3.1.6.7 Procedural text (<***proc***>see L.4.1.8.1) may be entered.

E.3.2 **Maintenance Test Flight Maintenance Information Module *%mtfmim;*.** The Maintenance Test Flight Information Module may consist of multiple maintenance test flight procedure work packages <***mtfprocwp***> maintenance test flight chart work package <***mtfchartwp***>.

Figure 49 Maintenance Test Flight Maintenance Information Module DTD Hierarchy

a. DTD fragment for ***%mtfmim;***:

```
<!ENTITY % mtfmim "(mtfprocwp+ | mtfchartwp)">
```

E.3.2.1 **Maintenance Test Flight Maintenance Procedures Work Package <*mtfprocwp*>.** The maintenance test flight maintenance procedures work package <***mtfprocwp***> is subdivided into the following elements and content requirements:

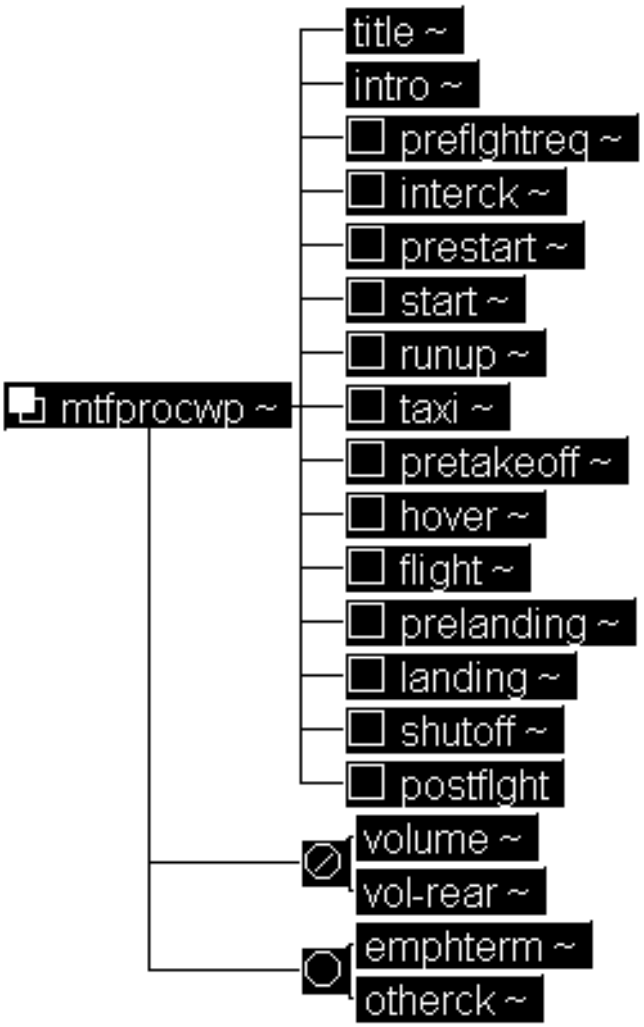

Figure 50 Maintenance Test Flight Maintenance Procedures Work Package DTD Hierarchy

a. DTD fragment for <***mtfprocwp***>:

```
<!ELEMENT mtfprocwp - -  (title, intro, preflghtreq?, interck?,
                          prestart?, start?, runup?, taxi?, pretakeoff?,
                          hover?, flight?, prelanding?, landing?,
                          shutoff?, postflght?) -(%vol.group;)
                          +(emphterm|otherck)>
<!ATTLIST mtfprocwp
          wpno            ID                #REQUIRED
          %tracking;
          %wprsrc-vals;
          %wpbodyatt;
```

```
%secur;>
```

b. Attributes for <***mtfprocwp***>:

1. **WPNO** - The unique number assigned to this work package by the original developer. This number remains the same when the work package is reused. The work package is referenced through an ID which is (#REQUIRED) and remains with the work package for the work package life. The FOSI generates the work package sequence number. Refer to MIL-STD-40051 Part 1 to obtain the work package number format.
2. **%TRACKING;** - Refer to common parameter entities for a complete description (see L.5.6).
3. **%WPRSRC-VALS;** - Refer to common parameter entities for a complete description (see L.5.5).
4. **%WPBODYATT;** - Refer to common parameter entities for a complete description (see L.5.4).
5. **%SECUR;** - Refer to common parameter entities for a complete description (see L.5.3).

E.3.2.1.1 The element <***title***>(see L.4.1.5.1) defines the work package title.

E.3.2.1.2 The element <***intro***>(see L.4.5.8) is introductory information for the work package.

E.3.2.1.3 The element <***preflghtreq***> contains the checks necessary prior to flight. This element contains paragraphs of text or procedural text contained as contained within the parmeter entity ***%procedures;***(see L.3.4).

a. DTD fragment for <***preflghtreq***>:

```
<!ELEMENT preflghtreq - - (%procedures;)>
<!ATTLIST preflghtreq
          %bodyatt;
          %secur;>
```

b. Attributes for <***preflghtreq***>:

1. **%BODYATT;** - Refer to common parameter entities for a complete description (see L.5.1).
2. **%SECUR;** - Refer to common parameter entities for a complete description (see L.5.3).

E.3.2.1.4 The element <***interck***> contains checks necessary to the interior. This element may contain warnings <***warning***>, cautions <***cautions***>, and/or notes <***note***> (contained within ***%alert;***(see L.3.2)), paragraphs (<***para***> see L.4.1.5.3) and/or paragraphs with required alert notices (<***specpara***> see L.4.1.1.1), and procedural text (<***proc***> see L.4.1.8.1), procedure items <***proc-item***>, or check list procedures <***cl-proc***>. In addition, figures (<***figure***> see L.4.4.1)and operations procedure symbols <***opsym***> may be entered.

a. DTD fragment for <***interck***>, <***start***>, <***taxi***>, <***hover***>, <***landing***>, and <***shutoff***>:

```
<!ELEMENT (interck | start | taxi | hover | landing | shutoff) - -
          ((%alert;, (para | specpara)*, (proc | proc-item+))
          | cl-proc+) -(genoperproc) +(figure|opsym)>
<!ATTLIST (interck | start | taxi | hover | landing | shutoff)
           crewmember  CDATA       #IMPLIED
```

```
        title       CDATA       #REQUIRED
        %bodyatt;
        %secur;>
```

b. Attributes for <***interck***>, <***start***>, <***taxi***>, <***hover***>, <***landing***>, and <***shutoff***>:

1. **CREWMEMBER** - The crewmember that should perform these checks is specified.
2. **TITLE**- Specifies the title of the interior check.
3. **%BODYATT;** - Refer to common parameter entities for a complete description (see L.5.1).
4. **%SECUR;** - Refer to common parameter entities for a complete description (see L.5.3).

E.3.2.1.4.1 The element <***proc-item***> is an item of procedure consisting of a procedural paragraph. It contains a required title (<***title***> see L.4.1.5.1) and at least one primary level step <***step1***>. The steps may be preceded by warnings <***warning***>, cautions <***caution***>, and notes <***note***> as contained within the parameter entity ***%alert;***, and paragraphs (<***para***> see L.4.1.5.3) and/or paragraphs with required alert notices (<***specpara***> see L.4.1.1.1)

a. DTD fragment for <***proc-item***>:

```
<!ELEMENT proc-item - - (title, %alert;, (para | specpara)*, step1+)>
<!ATTLIST proc-item
          %bodyatt;
          %secur;>
```

b. Attributes for <***proc-item***>:

1. **%BODYATT;** - Refer to common parameter entities for a complete description (see L.5.1).
2. **%SECUR;** - Refer to common parameter entities for a complete description (see L.5.3).

E.3.2.1.4.2 The check list procedures element <***cl-proc***> represents detailed procedures that expand on procedures presented in condensed form elsewhere in a Pilot's Checklist TM. The <***cl-proc***> element contains an optional title (see L.4.1.5.1) followed by primary level steps (<***step1***> see L.4.1.8.2)

a. DTD fragment for <***cl-proc***>:

```
<!ELEMENT cl-proc - - (title?, ((%alert;), step1+), navref?) +(table | opsym)>
<!ATTLIST cl-proc
          procid IDREF #REQUIRED
          %navlink;
          %secur;>
```

b. Attributes for <***cl-proc***>:

1. **%BODYATT;** - Refer to common parameter entities for a complete description (see L.5.1).
2. **%SECUR;** - Refer to common parameter entities for a complete description (see L.5.3).

E.3.2.1.4.3 The element <***opsym***> is an element used to contain a symbol that marks steps within flight operating procedures; symbols represent such aspects as copilot duty, or night or instrument flight only. An SGML parser will only recognize enity references entered within this element. Any other text (including SGML tags) is not recognized by an SGML parser.

a. DTD fragment for <***opsym***>:

```
<!ELEMENT opsym - - RCDATA>
<!ATTLIST opsym
          circle  %yesorno;   "0"
          id      ID          #REQUIRED>
```

b. Attributes for <***opsym***>:

1. **CIRCLE** - Specifies whether the symbol is a circled step number; a non-zero value indicates that it is.
2. **ID** - Specifies the identifier of the operational symbol

E.3.2.1.5 The element <***prestart***> contains the checks necessary for preparation of flight operation. This element contains paragraphs of text or procedural text as contained within the parameter entity ***%procedures;***.

a. DTD fragment for <***prestart***>, <***runup***>, <***pretakeoff***>, <***flight***>, <***prelanding***>, and <***otherck***>:

```
<!ELEMENT (prestart | runup | pretakeoff | flight | prelanding |
           otherck) - - (%procedures;) +(figure)>
<!ATTLIST (prestart | runup | pretakeoff | flight | prelanding |
          otherck)
          crewmember      CDATA   #IMPLIED
          %bodyatt;
          %secur;>
```

b. Attributes for <***prestart***>, <***runup***>, <***pretakeoff***>, <***flight***>, <***prelanding***>, and <***otherck***>:

1. **CREWMEMBER** - The crewmember that should perform these checks is specified.
2. **%BODYATT;** - Refer to common parameter entities for a complete description (see L.5.1).
3. **%SECUR;** - Refer to common parameter entities for a complete description (see L.5.3).

E.3.2.1.6 The element <***start***> contains the checks for starting the engine. This element may contains warnings <***warning***>, cautions <***cautions***>, and/or notes <***note***> (contained within ***%alert;***(see L.3.2)), paragraphs (<***para***> see L.4.1.5.3) and/or paragraphs with required alert notices (<***specpara***> see L.4.1.1.1), and procedural text (<***proc***> see L.4.1.8.1), procedure items <***proc-item***>, or check list procedures <***cl-proc***>. In addition, figures (<***figure***> see L.4.4.1)and operations procedure symbols <***opsym***> may be entered.

a. DTD fragment for <***start***>: (see E.3.2.1.4a.).

b. Attributes for <***start***>: (see E.3.2.1.4b.).

E.3.2.1.7 The element <***runup***> contains the checks for warm-up procedures. This element contains paragraphs of text or procedural text as contained within the parmeter entity ***%procedures;***(see L.3.4).

a. DTD fragment for <***runup***>: (see E.3.2.1.5a.).

b. Attributes for <***runup***>: (see E.3.2.1.5b.).

E.3.2.1.8 The element <***taxi***> contains the checks for taxiing. This element may contains warnings <***warning***>, cautions <***cautions***>, and/or notes <***note***> (contained within ***%alert;***(see L.3.2)), paragraphs

(<***para***> see L.4.1.5.3) and/or paragraphs with required alert notices (<***specpara***> see L.4.1.1.1), and procedural text (<***proc***> see L.4.1.8.1), procedure items <***proc-item***>, or check list procedures <***cl-proc***>. In addition, figures (<***figure***> see L.4.4.1)and operations procedure symbols <***opsym***> may be entered.

a. DTD fragment for <***taxi***>: (see E.3.2.1.4a.).

b. Attributes for <***taxi***>: (see E.3.2.1.4b.).

E.3.2.1.9 The element <***pretakeoff***> contains the checks necessary prior to takeoff. This element contains paragraphs of text or procedural text (***%procedures;*** see L.3.4)

a. DTD fragment for <***pretakeoff***>: (see E.3.2.1.5a.).

b. Attributes for <***pretakeoff***>: (see E.3.2.1.5b.).

E.3.2.1.10 The element <***hover***> contains the checks for hovering. This element may contains warnings <***warning***>, cautions <***cautions***>, and/or notes <***note***> (contained within ***%alert;***(see L.3.2)), paragraphs (<***para***> see L.4.1.5.3) and/or paragraphs with required alert notices (<***specpara***> see L.4.1.1.1), and procedural text (<***proc***> see L.4.1.8.1), procedure items <***proc-item***>, or check list procedures <***cl-proc***>. In addition, figures (<***figure***> see L.4.4.1)and operations procedure symbols <***opsym***> may be entered.

a. DTD fragment for <***hover***>: (see E.3.2.1.4a.).

b. Attributes for <***hover***>: (see E.3.2.1.4b.).

E.3.2.1.11 The element <***flight***> contains the flight checks for any special precautions that must be taken. This element contains paragraphs of text or procedural text as contained within the parmeter entity ***%procedures;***(see L.3.4).

a. DTD fragment for <***flight***>: (see E.3.2.1.5a.).

b. Attributes for <***flight***>: (see E.3.2.1.5b.).

E.3.2.1.12 The element <***prelanding***> contains the checks necessary prior to landing. This element contains paragraphs of text or procedural text as contained within the parmeter entity ***%procedures;***(see L.3.4).

a. DTD fragment for <***prelanding***>: (see E.3.2.1.5a.).

b. Attributes for <***prelanding***>: (see E.3.2.1.5b.).

E.3.2.1.13 The element <***landing***>contains the checks necessary for landing. This element may contains warnings <***warning***>, cautions <***cautions***>, and/or notes <***note***> (contained within ***%alert;***(see L.3.2)), paragraphs (<***para***> see L.4.1.5.3) and/or paragraphs with required alert notices (<***specpara***> see L.4.1.1.1), and procedural text (<***proc***> see L.4.1.8.1), procedure items <***proc-item***>, or check list procedures <***cl-proc***>. In addition, figures (<***figure***> see L.4.4.1)and operations procedure symbols <***opsym***> may be entered.

a. DTD fragment for <***landing***>: (see E.3.2.1.4a.).

b. Attributes for <***landing***>: (see E.3.2.1.4b.).

E.3.2.1.14 The element <***shutoff***> The element contains the checks for engine shutoff. This element may contains warnings <***warning***>, cautions <***cautions***>, and/or notes <***note***> (contained within ***%alert;***(see L.3.2)), paragraphs (<***para***> see L.4.1.5.3) and/or paragraphs with required alert notices (<***specpara***> see L.4.1.1.1), and procedural text (<***proc***> see L.4.1.8.1), procedure items <***proc-item***>, or check list procedures <***cl-proc***>. In addition, figures (<***figure***> see L.4.4.1)and operations procedure symbols <***opsym***> may be entered.

a. DTD fragment for <***shutoff***>: (see E.3.2.1.4a.).

b. Attributes for <***shutoff***>: (see E.3.2.1.4b.).

E.3.2.1.15 The element <***postflight***> contains the checks for post flight inspection. This element contains paragraphs of text or procedural text as contained within the parmeter entity ***%procedures;*** (see L.3.4).

a. DTD fragment for <***postflight***>:

```
<!ELEMENT postflght - - (%procedures;)>
```

E.3.2.1.16 The element <***emphterm***> (see L.4.1.6.2) is used to denote placard text.

E.3.2.1.17 The element <***otherck***> may be used to enter any other checks that do not have specific content elements. This element contains paragraphs of text or procedural text as contained within the parmeter entity ***%procedures;***(see L.3.4).

a. DTD fragment for <***otherck***>: (see E.3.2.1.5a.).

b. Attributes for <***otherck***>: (see E.3.2.1.5b.).

E.3.2.2 **Maintenance Test Flight Chart Work Package** <***mtfchartwp***>**.** The element <***mtfchartwp***> contains all the figures and/or tables required for the aircraft maintenance test flight check list. The maintenance test flight chart work package <***mtfchartwp***> is subdivided into the following elements and content requirements:

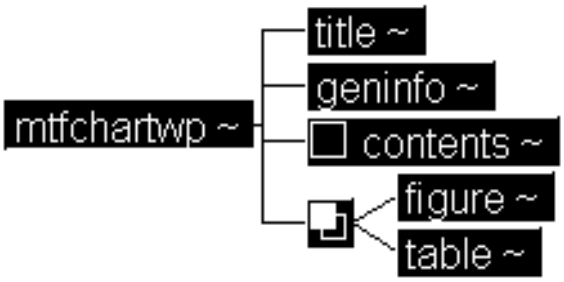

Figure 51 Maintenance Test Flight Chart Work Package DTD Hierarchy

a. DTD fragment for <***mtfchartwp***>:

```
<!ELEMENT mtfchartwp - o (title, geninfo, contents?, (figure | table)+)>
<!ATTLIST mtfchartwp
          wpno     ID      #REQUIRED
          %tracking;
          %wprsrc-vals;
          %wpbodyatt;
          %secur;>
```

b. Attributes for <***mtfchartwp***>:

1. **WPNO** - The unique number assigned to this work package by the original developer. This number remains the same when the work package is reused. The work package is referenced through an ID which is (#REQUIRED) and remains with the work package for

the work package life. The FOSI generates the work package sequence number. Refer to MIL-STD-40051 Part 1 to obtain the work package number format.

2. **%TRACKING;** - Refer to common parameter entities for a complete description (see L.5.6).
3. **%WPRSRC-VALS;** - Refer to common parameter entities for a complete description (see L.5.5).
4. **%WPBODYATT;** - Refer to common parameter entities for a complete description (see L.5.4).
5. **%SECUR;** - Refer to common parameter entities for a complete description (see L.5.3).

E.3.2.2.1 The element <***title***>(see L.4.1.5.1) defines the work package title.

E.3.2.2.2 The element <***geninfo***>(see L.4.5.7) is introductory information for the work package.

E.3.2.2.3 The element <***contents***> (see K.3.1.1.6) contains a table of contents for this work package.

E.3.2.2.4 The element <***figure***>(see L.4.4.1) is used to enter figures within this work package.

E.3.2.2.5 <***table***> (see L.4.2.1) is used to enter tables within this work package.

E.3.3 **Ammunition Maintenance Information Module *%ammomim;*.** The Ammunition Maintenance Information Module consists of one or more ammunitions work package <***ammowp***>.

Figure 52 Ammunition Maintenance Information Module DTD Hierarchy

a. DTD fragment for ***%ammomim;***:

```
<!ENTITY % ammomim "(ammowp+)">
```

E.3.3.1 **Ammunition Information Work Package <*ammowp*>.** The element <***ammowp***> contains all procedures required for the care and handling of ammunition within the ammunition markings work package. There may be more than one ammunitions work package. The ammunitions work package is subdivided into the following content requirements:

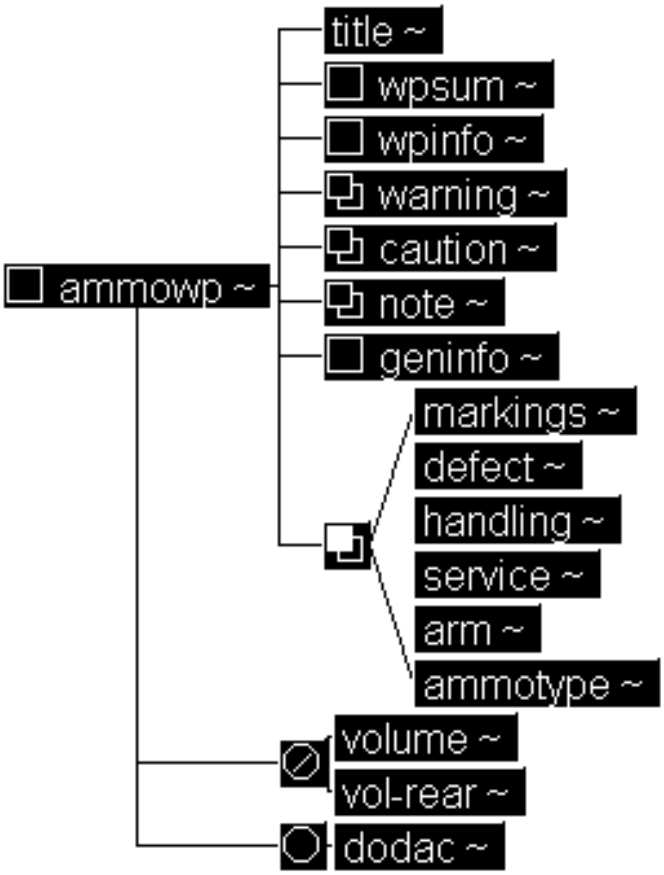

Figure 53 Ammunition Information Work Package DTD Hierarchy

a. DTD fragment for <***ammowp***>:

```
<!ELEMENT ammowp - - (title, wpsum?, wpinfo?, warning*, caution*, note*,
                      geninfo?, (markings | defect | handling | service |
                      arm | ammotype)+) - (%vol.group;) +(dodac)>
<!ATTLIST ammowp level (depot|operator| gensup|dirsup| unitlvl|
                        avum-avim| inter|tmlvls) #REQUIRED
          wpno  ID                               #REQUIRED
          %tracking;
          %wprsrc-vals;
          %navlink;
          %wpbodyatt;
          %secur;>
```

b. Attributes for <***ammowp***>:

1. **LEVEL** - The maintenance level of the work package.

(a) “OPERATOR” - Applies to operator maintenance level.

(b) “UNITLVL” - Applies to unit maintenance level.

(c) “DIRSUP” - Applies to direct support (DS) maintenance level.

(d) “GENSUP” - Applies to general support (GS) maintenance level.

(e) “INTER” - Applies to intermediate (DS/GS) maintenance level.

(f) “DEPOT” - Applies to depot maintenance level.

(g) “AVUM-AVIM” - Applies to aviation unit (AVUM) and intermediate (AVIM) maintenance level.

(h) “TMLVLS” - Applies to all maintenance levels.

2. **WPNO** - The unique number assigned to this work package by the original developer. This number remains the same when the work package is reused. The work package is referenced through an ID which is (#REQUIRED) and remains with the work package for the work package life. The FOSI generates the work package sequence number. Refer to MIL-STD-40051 Part 1 to obtain the work package number format.
3. **%TRACKING;** - Refer to common parameter entities for a complete description (see L.5.6).
4. **%WPRSRC-VALS;** - Refer to common parameter entities for a complete description (see L.5.5).
5. **%NAVLINK;** - Refer to common parameter entities for a complete description (see L.5.8).
6. **%WPBODYATT;** - Refer to common parameter entities for a complete description (see L.5.4).
7. **%SECUR;** - Refer to common parameter entities for a complete description (see L.5.3).

E.3.3.1.1 The element <***title***>(see L.4.1.5.1) defines the work package title.

E.3.3.1.2 The element <***wpsum***>(see L.4.6.1) summarizes the procedures in the work package. Refer to the common elements section for a complete description.(see L.4.6.1)

E.3.3.1.3 The element <***wpinfo***>(see L.4.6.1) identifies the precondition requirements (tools, personnel, etc.) needed. Refer to the common elements section for a complete description.(see L.4.6.2)

E.3.3.1.4 The element <***warning***> (see L.4.1.1.2) is used to enter warnings pertaining to this work package.

E.3.3.1.5 The element <***caution***> (see L.4.1.1.3) is used to enter cautions pertaining to this work package.

E.3.3.1.6 The element <***note***> (see L.4.1.1.4) is used to enter notes pertaining to this work package.

E.3.3.1.7 The element <***geninfo***>(see L.4.5.7) is introductory information for the work package.

E.3.3.1.8 The element <***markings***> is used for ammunition markings information. This element is used within the ammunitions work package only. The element <***markings***> contains a title (<***title***> see L.4.1.5.1)followed by paragraphs (<***para***> see L.4.1.5.3), paragraphs with required alert notices (<***specpara***> see L.4.1.1.1), procedural text (<***proc***> see L.4.1.8.1), and/or navigational references (<***navref***> see L.4.7.10).

a. DTD fragment for <***markings***>:

```
<!ELEMENT markings - - (title, (proc | para | specpara | navref)+)>
<!ATTLIST markings
          %navlink;
```

```
        %bodyatt;
        %secur;>
```

b. Attributes for <***markings***>:

1. **%NAVLINK;** - Refer to common parameter entities for a complete description (see L.5.8).
2. **%BODYATT;** - Refer to common parameter entities for a complete description (see L.5.1).
3. **%SECUR;** - Refer to common parameter entities for a complete description (see L.5.3).

E.3.3.1.9 The defect element <***defect***> is used for ammunition defect procedures and visual inspection information. This element is used within the ammunition work package only. This element containsparagraphs of text that may be grouped into sections or subsections (***%titldtext;*** see L.3.3).

a. DTD fragment for <***defect***>:

```
<!ELEMENT defect  - o  ((%titldtext;)+)>
<!ATTLIST defect
        %navlink;
        %bodyatt;
        %secur;>
```

b. Attributes for <***defect***>:

1. **%NAVLINK;** - Refer to common parameter entities for a complete description (see L.5.8).
2. **%BODYATT;** - Refer to common parameter entities for a complete description (see L.5.1).
3. **%SECUR;** - Refer to common parameter entities for a complete description (see L.5.3).

E.3.3.1.10 The element <***handling***> is used for ammunition handling information. This element is used within the ammunition work package only. This element contains a required title (<***title***> see L.4.1.3.8)followed by one or more of the following specific tasks: <***acptrejinsp***>,<***markings***>, and/or <***packing***>. A navigational reference (<***navref***> see L.4.7.10) may be entered within this element.

a. DTD fragment for <***handling***>:

```
<!ELEMENT handling - o (title,(unpacking |acptrejinsp | markings |
                        packing)+) +(navref)>
<!ATTLIST handling
        %bodyatt;
        %secur;>
```

b. Attributes for <***handling***>:

1. **%BODYATT;** - Refer to common parameter entities for a complete description (see L.5.1).
2. **%SECUR;** - Refer to common parameter entities for a complete description (see L.5.3).

E.3.3.1.10.1 The element <***unpacking***> contains all unpacking information. It contains a required title (<***title***> see L.4.1.5.1) followed by optional work package information containing precondition requirements (<***wpinfo***>see L.4.6.2), followed by paragraphs (<***para***> see L.4.1.5.3), paragraphs with required alert notices (<***specpara***> see L.4.1.1.1), and/or procedural text (<***proc***>see L.4.1.8.1).

a. DTD fragment for <***unpacking***>:

```
<!ELEMENT unpacking - - (title, wpinfo?, (proc | para | specpara)+)>
<!ATTLIST unpacking
          %navlink;
          %bodyatt;
          %secur;>
```

b. Attributes for <***unpacking***>:

1. **%NAVLINK;** - Refer to common parameter entities for a complete description (see L.5.8).
2. **%BODYATT;** - Refer to common parameter entities for a complete description (see L.5.1).
3. **%SECUR;** - Refer to common parameter entities for a complete description (see L.5.3).

E.3.3.1.10.2 The element <***acptrejinsp***> (see E.3.1.4.8.16)is the task used for inspection-acceptance/rejection information required to determine the serviceability of the ammunition or related equipment within an ammunitions work package.

E.3.3.1.10.3 The element <***markings***> (see E.3.3.1.8)is used for ammunition markings information.

E.3.3.1.10.4 The element <***packing***> contains all packing information. It contains a required title (<***title***>see L.4.1.5.1) followed by optional work package information containing precondition requirements (<***wpinfo***> see L.4.6.2), followed by paragraphs (<***para***> see L.4.1.5.3), paragraphs with required alert notices (<***specpara***> see L.4.1.1.1), and/or procedural text (<***proc***>see L.4.1.8.1).

a. DTD fragment for <***packing***>:

```
<!ELEMENT packing - - (title, wpinfo?, (proc | para | specpara)+)>
<!ATTLIST packing
          %navlink;
          %bodyatt;
          %secur;>
```

b. Attributes for <***packing***>:

1. **%NAVLINK;** - Refer to common parameter entities for a complete description (see L.5.8).
2. **%BODYATT;** - Refer to common parameter entities for a complete description (see L.5.1).
3. **%SECUR;** - Refer to common parameter entities for a complete description (see L.5.3).

E.3.3.1.11 The element <***service***> is used for instructions on complete servicing of the equipment. This includes replenishment of fuel, oil, hydraulic or other fluids, oxygen, nitrogen or other gases, and tire pressure. Any other such items and materials required may be included (except for lubricants). The element <***service***> contains paragraphs (<***para***> see L.4.1.5.3), paragraphs with required alert notices (<***specpara***> see L.4.1.1.1), and/or procedural text (<***proc***>see L.4.1.8.1).

a. DTD fragment for <***service***>:

```
<!ELEMENT service - - (para | specpara | proc)+>
<!ATTLIST service
          %navlink;
          %bodyatt;
          %secur;>
```

b. Attributes for <***service***>:

1. **%NAVLINK;** - Refer to common parameter entities for a complete description (see L.5.8).
2. **%BODYATT;** - Refer to common parameter entities for a complete description (see L.5.1).
3. **%SECUR;** - Refer to common parameter entities for a complete description (see L.5.3).

E.3.3.1.12 The element <***arm***> is used for information on arming of ammunition. It contains a required title (<***title***>see L.4.1.5.1) followed by optional work package information containing precondition requirements (<***wpinfo***> see L.4.6.2), followed by paragraphs (<***para***> see L.4.1.5.3), paragraphs with required alert notices (<***specpara***> see L.4.1.1.1), and/or procedural text (<***proc***>see L.4.1.8.1).

a. DTD fragment for <***arm***>:

```
<!ELEMENT arm - - (title, wpinfo?, ( proc | para | specpara)+)>
<!ATTLIST arm
          %navlink;
          %bodyatt;
          %secur;>
```

b. Attributes for <***arm***>:

1. **%NAVLINK;** - Refer to common parameter entities for a complete description (see L.5.8).
2. **%BODYATT;** - Refer to common parameter entities for a complete description (see L.5.1).
3. **%SECUR;** - Refer to common parameter entities for a complete description (see L.5.3).

E.3.3.1.13 The element <***ammotype***> contains the name and information pertaining to a type of ammunition. After the name (see L.4.5.11), the information is entered using paragraphs (<***para***> see L.4.1.5.3) and/or paragraphs with required alert notices (<***specpara***> see L.4.1.1.1). This information may be followed by a navigational reference (<***navref***> see L.4.7.10).

a. DTD fragment for <***ammotype***>:

```
<!ELEMENT ammotype - o (name, ((para | specpara)+, navref?))>
<!ATTLIST ammotype
          %navlink;
          %refs;
          %secur;>
```

b. Attributes for <***ammotype***>:

1. **%NAVLINK;** - Refer to common parameter entities for a complete description (see L.5.8).
2. **%REFS;** - Refer to common parameter entities for a complete description (see L.5.2).
3. **%SECUR;** - Refer to common parameter entities for a complete description (see L.5.3).

E.3.3.1.14 The element <***dodac***> Department of Defense Ammunition Code definitively identifies a type of ammunition. This element is used within the ammunition work package only. A cross reference (<***xref***> see L.4.1.3.8).

a. DTD fragment for <***dodac***>:

```
<!ELEMENT dodac      - - (#PCDATA) +(xref)>
<!ATTLIST dodac
          %refs;
          %secur;>
```

b. Attributes for <***dodac***>:

1. **%REFS;** - Refer to common parameter entities for a complete description (see L.5.2).
2. **%SECUR;** - Refer to common parameter entities for a complete description (see L.5.3).

E.3.4 **Auxiliary Equipment Maintenance Information Module *%auxeqpmim;*.** The Auxiliary Equipment Maintenance Information Module consists of one or more auxiliary equipment work package <***auxeqpwp***>.

Figure 54 Auxiliary Equipment Maintenance Information Module DTD Hierarchy

a. DTD fragment ***%auxeqpmim;***:

```
<!ENTITY % auxeqpmim "(auxeqpwp+)">
```

E.3.4.1 The element <***auxeqpwp***> contains all maintenance instructions for peculiar support equipment when not provided by procurement. The auxiliary equipment work package is subdivided into the following elements and content requirements:

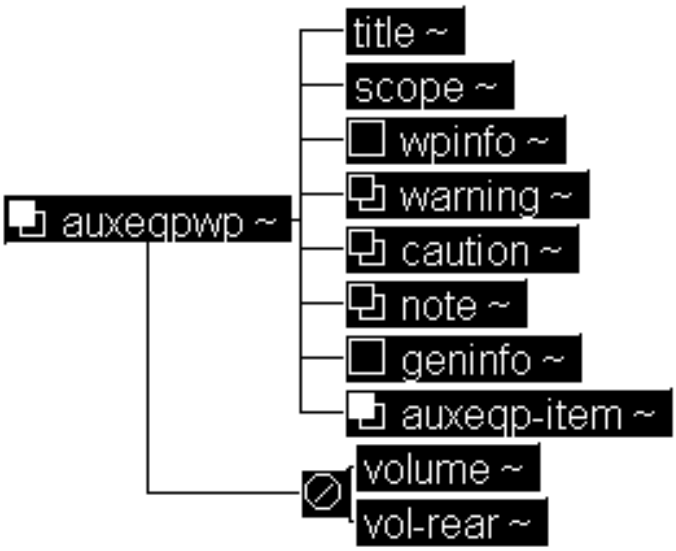

Figure 55 Auxiliary Equipment Work Package DTD Hierarchy

a. DTD fragment for <***auxeqpwp***>:

```
<!ELEMENT auxeqpwp - - (title, scope, wpinfo?, warning*, caution*,
                        note*, geninfo?, auxeqp-item+) -(%vol.group;)>
```

```
<!ATTLIST auxeqpwp level (tmlvls | depot | operator | gensup |
                          dirsup | unitlvl | inter | avum-avim) #REQUIRED
          wpno            ID                                     #REQUIRED
          %tracking;
          %wprsrc-vals;
          %wpbodyatt;
          %secur;>
```

b. Attributes for <***auxeqpwp***>:

1. **LEVEL** - The maintenance level of the work package.
   (a) "OPERATOR" - Applies to operator maintenance level.
   (b) "UNITLVL" - Applies to unit maintenance level.
   (c) "DIRSUP" - Applies to direct support (DS) maintenance level.
   (d) "GENSUP" - Applies to general support (GS) maintenance level.
   (e) "INTER" - Applies to intermediate (DS/GS) maintenance level.
   (f) "DEPOT" - Applies to depot maintenance level.
   (g) "AVUM-AVIM" - Applies to aviation unit (AVUM) and intermediate (AVIM) maintenance level.
   (h) "TMLVLS" - Applies to all maintenance levels.
2. **WPNO** - The unique number assigned to this work package by the original developer. This number remains the same when the work package is reused. The work package is referenced through an ID which is (#REQUIRED) and remains with the work package for the work package life. The FOSI generates the work package sequence number. Refer to MIL-STD-40051 Part 1 to obtain the work package number format.
3. **%TRACKING;** - Refer to common parameter entities for a complete description (see L.5.6).
4. **%WPRSRC-VALS;** - Refer to common parameter entities for a complete description (see L.5.5).
5. **%WPBODYATT;** - Refer to common parameter entities for a complete description (see L.5.4).
6. **%SECUR;** - Refer to common parameter entities for a complete description (see L.5.3).

E.3.4.1.1 The element <***title***>(see L.4.1.5.1) defines the work package title.

E.3.4.1.2 The element scope (<***scope***> see L.4.5.15) contains a brief description of the scope of this work package.

E.3.4.1.3 The element <***wpinfo***>(see L.4.6.1) identifies the precondition requirements (tools, personnel, etc.) needed. Refer to the common elements section for a complete description.(see L.4.6.2)

E.3.4.1.4 The element warning (<***warning***> see L.4.1.1.2) is used here to enter a warning regarding the entire work package.

E.3.4.1.5 The element caution (<***caution***> see L.4.1.1.3) is used here to enter a caution regarding the entire work package.

E.3.4.1.6 The element note (<***note***>see L.4.1.1.4)is used here to enter a note regarding the entire work package.

E.3.4.1.7 The element <***geninfo***>(see L.4.5.7) is introductory information for the work package.

E.3.4.1.8 The element <***auxeqp-item***> contains maintenance task information for the particular auxiliary equipment identified. This element contains the name of the item (<***name***> see L.4.5.11), may be followed by model numbers <***modelno***> see L.4.5.10), part numbers <***partno***> see L.4.5.13), and/or national stock numbers <***nsn***> see L.4.5.12), a work package summary (<***wpsum***> see L.4.6.1), work package information containing precondition requirements (<***wpinfo***> see L.4.6.2), and at least one maintenance task (<***maintsk***> see E.3.1.4.8) and/or paragraphs of text that may be grouped into sections or subsections (***%titldtext;*** see L.3.3).

a. DTD fragment for <***auxeqp-item***>:

```
<!ELEMENT auxeqp-item - o ((name, (modelno | partno | nsn)*), wpsum?,
                           wpinfo?, (maintsk | %titldtext;)+)>
<!ATTLIST auxeqp-item
          %navlink;
          %refs;
          %secur;>
```

b. Attributes for <***auxeqp-item***>:

1. **%NAVLINK;** - Refer to common parameter entities for a complete description (see L.5.8).
2. **%REFS;** - Refer to common parameter entities for a complete description (see L.5.2).
3. **%SECUR;** - Refer to common parameter entities for a complete description (see L.5.3).

E.3.5 **Preventive Maintenance Services Maintenance Information Module *%pmsmim;*.** The Preventive Maintenance Services Chapter consists of one or more preventive maintenance service inspection work packages <***pms-inspecwp***>.

Figure 56 Preventive Maintenance Services Maintenance Information Module %pmsmim;

a. DTD fragment for ***%pmsmim;***:

```
<!ENTITY % pmsmim "(pms-inspecwp+)">
```

E.3.5.1 The element <***pms-inspecwp***> contains all data regarding preventive maintenance inspection for aircraft PM services. This work package is for PM services only. The preventive maintenance service inspection work package is subdivided into the following elements and content requirements:

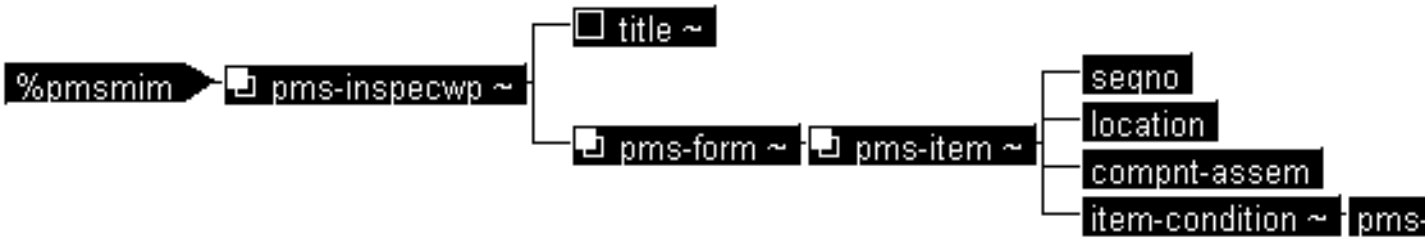

Figure 57 Preventive Maintenance Service Inspection Work Package DTD Hierarchy

a. DTD fragment <***pms-inspecwp***>:

```
<!ELEMENT pms-inspecwp - - (title?, pms-form+)>
<!ATTLIST pms-inspecwp
          %tracking;
          %wprsrc-vals;>
```

b. Attributes for <***pms-inspecwp***>:

1. **%TRACKING;** - Refer to common parameter entities for a complete description (see L.5.6).
2. **%WPRSRC-VALS;** - Refer to common parameter entities for a complete description (see L.5.5).

E.3.5.1.1 The element <***title***>(see L.4.1.5.1) defines the work package title.

E.3.5.1.2 The element <***pms-form***> is used for aircraft manuals only in the preparation of preventive maintenance services technical manuals. The element <***pms-form***> contains one or more PMS items <***pms-item***>.

a. DTD fragment <***pms-form***>:

```
<!ELEMENT pms-form - - (pms-item)+>
<!ATTLIST pms-form
          power (on | off)   #IMPLIED
          avionics %yesorno; #IMPLIED
          lube     %yesorno; #IMPLIED>
```

b. Attributes for <***pms-form***>:

1. **POWER** - Specifies whether the inspection is a power on (ON) or power off (OFF) inspection.
2. **AVIONICS** - Used to specify the status of avionics inspections.
3. **LUBE** - Used to specify the lubrication requirement in accordance with the lubrication chart.

E.3.5.1.2.1 The element <***pms-item***> indicates a preventive maintenance inspection item for Safety-of-Flight. Each item will begin a new row. Each item will contain a sequence number (<***seqno***> see a.), location (<***location***> see E.3.1.1.6.3.2.1.3), component assembly (<***compnt-assem***> see E.3.1.1.6.3.2.1.3), and an item-condition <***item-condition***>.

a. DTD fragment <***pms-item***>:

```
<!ELEMENT pms-item - - (seqno, location, compnt-assem, item-condition)>
<!ATTLIST pms-item
          %navlink;
          %refs;
          %secur;>
```

b. Attributes for <***pms-item***>:

1. **%NAVLINK;** - Refer to common parameter entities for a complete description (see L.5.8).
2. **%REFS;** - Refer to common parameter entities for a complete description (see L.5.2).

3. **%SECUR;** - Refer to common parameter entities for a complete description (see L.5.3).

E.3.5.1.2.1.1 The element <***item-condition***> is used to identify an item condition of an equipment of preventive maintenance services technical manuals. It contains a PMS procedure <***pms-proc***>.

a. DTD fragment for <***item-condition***>:

```
<!ELEMENT item-condition - - (pms-proc)>
<!ATTLIST item-condition
          safeflght   %yesorno;   #IMPLIED>
```

b. Attributes for <***item-condition***>:

1. **SAFEFLGHT** - Specifies whether or not the condition is of safe flight.

E.3.5.1.2.1.1.1 The element <***pms-proc***> contains an optional title (<***title***> see L.4.1.5.1), followed by alert notices contained within the parameter entity ***%alert;*** (see L.3.2), followed by either at least one paragraph (<***para***> see L.4.1.5.3) or at least one primary level step (<***step1***> see L.4.1.8.2).

a. DTD fragment for <***pms-proc***>:

```
<!ELEMENT pms-proc - - (title?, (%alert;), (para+ | step1+) )>
<!ATTLIST pms-proc
          safeflght      %yesorno;      #IMPLIED>
```

b. Attributes for <***pms-proc***>:

1. **SAFEFLGHT** - Specifies whether or not the condition is of safe flight.

E.3.6 **Phased Maintenance Inspection Checklist Maintenance Information Module *%pmicklistmim;*.** Phased Maintenance Inspection Checklist Maintenance Information Module consists of one or more phased maintenance inspection checklist work package <***pmi-cklistwp***>.

Figure 58 Phased Maintenance Inspection Checklist Maintenance Information Chapter %pmicklistmim; DTD Hierarchy

a. DTD fragment for ***%pmicklistmim;***:

```
<!ENTITY % pmicklistmim "(pmi-cklistwp+)">
```

E.3.6.1 The element <***pmi-cklistwp***> contains all of the data required to perform phased maintenance inspections on aircraft. This work package is for aircraft only. The phased maintenance inspection checklist work package is subdivided into the following elements and content requirements:

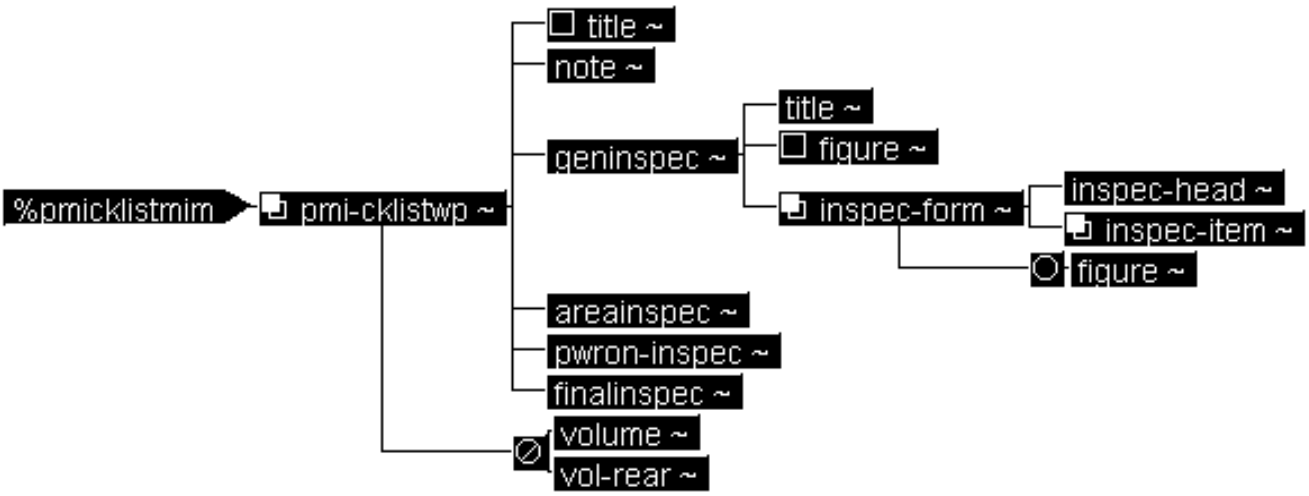

Figure 59 Phased Maintenance Inspection Checklist Work Package <pmi-cklistwp> DTD Hierarchy

a. DTD fragment for <***pmi-cklistwp***>:

```
<!ELEMENT pmi-cklistwp - - (title?, note, geninspec, areainspec,
                            pwron-inspec, finalinspec)  -(%vol.group;)>
<!ATTLIST pmi-cklistwp
          wpno            ID                #REQUIRED
          %tracking;
          %wprsrc-vals;
          %wpbodyatt;
          %secur;>
```

b. Attributes for <***pmi-cklistwp***>:

1. **WPNO** - The unique number assigned to this work package by the original developer. This number remains the same when the work package is reused. The work package is referenced through an ID which is (#REQUIRED) and remains with the work package for the work package life. The FOSI generates the work package sequence number. Refer to MIL-STD-40051 Part 1 to obtain the work package number format.
2. **%TRACKING;** - Refer to common parameter entities for a complete description (see L.5.6).
3. **%WPRSRC-VALS;** - Refer to common parameter entities for a complete description (see L.5.5).
4. **%WPBODYATT;** - Refer to common parameter entities for a complete description (see L.5.4).
5. **%SECUR;** - Refer to common parameter entities for a complete description (see L.5.3).

E.3.6.1.1 The element <***title***>(see L.4.1.5.1) defines the work package title.

E.3.6.1.2 The element <***note***> (see L.4.1.1.4) is used to enter notes pertaining to this work package.

E.3.6.1.3 The element <***geninspec***> contains the general inspection items specified by the procuring activity. This element contains a required title <***title***> (see L.4.1.5.1), an optional figure (<***figure***> (see L.4.4.1), and the inspection formation <***inspec-form***>.

a. DTD fragment for <***geninspec***>, <***areainspec***>, <***pwron-inspec***>, and <***finalinspec***>:

```
<!ELEMENT (geninspec | areainspec | pwron-inspec | finalinspec) - -
          (title, figure?, inspec-form+)>
<!ATTLIST (geninspec | areainspec | pwron-inspec | finalinspec)
          %bodyatt;
          %secur;>
```

b. Attributes for <***geninspec***>, <***areainspec***>, <***pwron-inspec***>, and <***finalinspec***>:

1.

(a) **%BODYATT;** - Refer to common parameter entities for a complete description (see L.5.1).

(b) **%SECUR;** - Refer to common parameter entities for a complete description (see L.5.3).

E.3.6.1.3.1 The element <***inspec-form***> is the format used for specifying specific inspection types contained within the PMI checklist work package. A required inspection heading <***inspec-head***> and one or more inspection items <***inspec-item***> are contained within the <***inspec-form***>. Figures (<***figure***> see L.4.4.1).

a. DTD fragment for <***inspec-form***>:

```
<!ELEMENT inspec-form - - (inspec-head, inspec-item+) +(figure)>
<!ATTLIST inspec-form
          %bodyatt;
          %secur;>
```

b. Attributes for <***inspec-form***>:

1.

(a) **%BODYATT;** - Refer to common parameter entities for a complete description (see L.5.1).

(b) **%SECUR;** - Refer to common parameter entities for a complete description (see L.5.3).

E.3.6.1.3.1.1 The element <***inspec-head***> contains the heading information for the PMI check list. The headings fall under <***phaseno***>, <***inspec-area***><***serialno***>, <***date***>, and <***totalhrs***>.

a. DTD fragment for <***inspec-head***>:

```
<!ELEMENT inspec-head - o (phaseno, inspec-area, serialno, date,
                           totalhrs)>
<!ATTLIST inspec-head
          %bodyatt;
          %secur;>
```

b. Attributes for <***inspec-head***>:

1.

(a) **%BODYATT;** - Refer to common parameter entities for a complete description (see L.5.1).

(b) **%SECUR;** - Refer to common parameter entities for a complete description (see L.5.3).

E.3.6.1.3.1.1.1 The element <***phaseno***> contains the phase number of the inspection item (***%text;***(see L.3.6) is available to enter inline formatting and contextual characteristics).

a. DTD fragment for <***phaseno***>, <***inspec-area***>, <***totalhrs***>, <***requiremnt***>, <***status***>, <***indentfault***>, and <***initials***>:

```
<!ELEMENT (phaseno | inspec-area | totalhrs |
            requirement | status | identfault |
            initials)- o (%text;)
<!ATTLIST (phaseno | inspec-area | totalhrs |
            requirement | status | identfault |
            initials)
          %bodyatt;
          %secur;>
```

b. Attributes for <***phaseno***>, <***inspec-area***>, <***totalhrs***>, <***requiremnt***>, <***status***>, <***indentfault***>, and <***initials***>:

1.

(a) **%BODYATT;** - Refer to common parameter entities for a complete description (see L.5.1).

(b) **%SECUR;** - Refer to common parameter entities for a complete description (see L.5.3).

E.3.6.1.3.1.1.2 The element <***inspec-area***> is used to enter the area of the inspection (***%text;***(see L.3.6) is available to enter inline formatting and contextual characteristics).

a. DTD fragment for <***inspec-area***>:(see E.3.6.1.3.1.1.1a.).

b. Attributes for <***inspec-area***>: (see E.3.6.1.3.1.1.1b.).

E.3.6.1.3.1.1.3 The element <***serialno***> (see E.3.6.1.3.1.1.3) is used to enter the serial number (***%text;***(see L.3.6) is available to enter inline formatting and contextual characteristics).

a. DTD fragment for <***serialno***>:

```
<!ELEMENT serialno - o (%text;)>
<!ATTLIST serialno
            %bodyatt;
            %secur;>
```

b. Attributes for <***serialno***>:

1. **%BODYATT;** - Refer to common parameter entities for a complete description (see L.5.1).
2. **%SECUR;** - Refer to common parameter entities for a complete description (see L.5.3).

E.3.6.1.3.1.1.4 The element <***date***> (see K.3.1.1.3.1.2) is used to enter the date (***%text;***(see L.3.6) is available to enter inline formatting and contextual characteristics).

E.3.6.1.3.1.1.5 The element <***totalhrs***> is used to enter the total number of hours needed for the inspection (***%text;***(see L.3.6) is available to enter inline formatting and contextual characteristics).

a. DTD fragment for <***totalhrs***>:(see E.3.6.1.3.1.1.1a.).

b. Attributes for <***totalhrs***>: (see E.3.6.1.3.1.1.1b.).

E.3.6.1.3.1.2 The element <***inspec-item***> indicates an inspection item. Each item will indicate a new row. Each item will contain an inspection phase <***inspecphase***>, requirement <***requiremnt***>, status <***status***>, fault identity <***ident-fault***>, action required <***actionreq***> and initials <***initials***>.

a. DTD fragment for <***inspec-item***>:

```
<!ELEMENT inspec-item - o (inspecphase, requiremnt, status, ident-fault,
                           actionreq, initials)>
<!ATTLIST inspec-item
          %bodyatt;
          %secur;>
```

b. Attributes for <***inspec-item***>:

1.

(a) **%BODYATT;** - Refer to common parameter entities for a complete description (see L.5.1).

(b) **%SECUR;** - Refer to common parameter entities for a complete description (see L.5.3).

E.3.6.1.3.1.2.1 The element <***inspecphase***> is used to enter the phase of the inspection (***%text;***(see L.3.6) is available to enter inline formatting and contextual characteristics).

a. DTD fragment for <***inspecphase***>:

```
<!ELEMENT inspecphase - o (%text;) >
<!ATTLIST inspecphase
          combat-inspec %yesorno; #IMPLIED
          %bodyatt;
          %secur;>
```

b. Attributes for <***inspecphase***>:

1.

(a) **COMBAT-INSPEC** - Specifies whether or not this inspection should occur during combat.

(b) **%BODYATT;** - Refer to common parameter entities for a complete description (see L.5.1).

(c) **%SECUR;** - Refer to common parameter entities for a complete description (see L.5.3).

E.3.6.1.3.1.2.2 The element <***requiremnt***> is used to enter the requirements for the inspection (***%text;***(see L.3.6) is available to enter inline formatting and contextual characteristics).

a. DTD fragment for <***requiremnt***>:(see E.3.6.1.3.1.1.1a.).

b. Attributes for <***requiremnt***>: (see E.3.6.1.3.1.1.1b.).

E.3.6.1.3.1.2.3 The element <***status***> is used to enter the status of the inspection (***%text;***(see L.3.6) is available to enter inline formatting and contextual characteristics).

a. DTD fragment for <***status***>:(see E.3.6.1.3.1.1.1a.).

b. Attributes for <***status***>: (see E.3.6.1.3.1.1.1b.).

E.3.6.1.3.1.2.4 The element <***ident-fault***> is used to identify the fault (***%text;***(see L.3.6) is available to enter inline formatting and contextual characteristics).

a. DTD fragment for <***ident-fault***>:(see E.3.6.1.3.1.1.1a.).

b. Attributes for <***ident-fault***>: (see E.3.6.1.3.1.1.1b.).

E.3.6.1.3.1.2.5 The element <***actionreq***> is used to enter any actions required for the inspection (***%text;***(see L.3.6) is available to enter inline formatting and contextual characteristics).

a. DTD fragment for <***actionreq***>:(see E.3.1.4.8.23.1.4a.).

b. Attributes for <***actionreq***>: (see E.3.1.4.8.23.1.4b.).

E.3.6.1.3.1.2.6 The element <***initials***> of the person performing the inspection (***%text;***(see L.3.6) is available to enter inline formatting and contextual characteristics).

a. DTD fragment for <***initials***>:(see E.3.6.1.3.1.1.1a.).

b. Attributes for <***initials***>: (see E.3.6.1.3.1.1.1b.).

E.3.6.1.4 The element <***areainspec***> contains inspection by area including all surfaces, materials, components and equipment. This element contains a required title <***title***> (see L.4.1.5.1), an optional figure (<***figure***> (see L.4.4.1), and the inspection formation <***inspec-form***>.

a. DTD fragment for <***areainspec***>:(see E.3.6.1.3a.).

b. Attributes for <***areainspec***>: (see E.3.6.1.3b.).

E.3.6.1.5 The element <***pwron-inspec***> contains the aircraft power on inspection as specified by the procuring activity. This element contains a required title <***title***> (see L.4.1.5.1), an optional figure (<***figure***> (see L.4.4.1), and the inspection formation <***inspec-form***>.

a. DTD fragment for <***pwron-inspec***>:(see E.3.6.1.3a.).

b. Attributes for <***pwron-inspec***>: (see E.3.6.1.3b.).

E.3.6.1.6 The element <***finalinspec***> contains the aircraft final inspection requirements as specified by the procuring activity. This element contains a required title <***title***> (see L.4.1.5.1), an optional figure (<***figure***> (see L.4.4.1), and the inspection formation <***inspec-form***>.

a. DTD fragment for <***finalinspec***>:(see E.3.6.1.3a.).

b. Attributes for <***finalinspec***>: (see E.3.6.1.3b.).

Troubleshooting Information Chapter

F.1 **Scope.** The following paragraphs give a description and use of elements used in the MIL-STD-2361(SC) Troubleshooting Information Chapter DTD.

F.2 **Applicable documents.** Refer to paragraph 2.

F.3 The following paragraphs give a description and use of the elements used in the MIL-STD-2361(SC) Troubleshooting Information Chapter DTD.

The top element in a troubleshooting information chapter <***tim***>, contains all troubleshooting information and procedures authorized to be performed at the stated maintenance level. A manual with more than one maintenance level may include a TIM for each level. The chapter contains an optional maintenance level log on script (<***login***> see L.4.7.9), an optional title page for the chapter (<***titlepg***> see L.4.5.16) followed by either maintenance troubleshooting work packages or maintenance test flight work packages(<***mtf-tswp***>) (for aircraft only). The maintenance troubleshooting work packages may include troubleshooting introduction work package(s) (<***tsintrowp***>), index to troubleshooting procedures work package(s) (<***tsindxwp***>), troubleshooting support test modules work package(s) (<***testmodulewp***>), troubleshooting procedures work package(s) (<***tswp***>) and supporting technical information work package(s) (<***techdescwp***>). Troubleshooting information chapters <***tim***> is prepared for the weapon system/equipment and chapters must consist of the troubleshooting work packages.

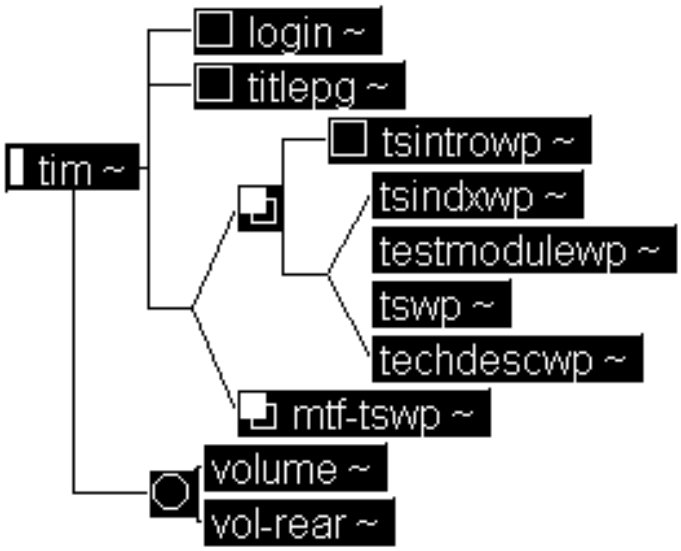

Figure 60 TIM DTD Hierarchy

a. DTD fragment for <***tim***>:

```
<!ELEMENT tim - - (login?, titlepg?, ((tsintrowp?, (tsindxwp |
                  testmodulewp | tswp | techdescwp))+ | mtf-tswp+))
                  +(%vol.group;)>
<!ATTLIST tim
          tmno            CDATA                    #CURRENT
          tmlabel         CDATA                    #REQUIRED
```

```
eic             CDATA                    #CURRENT
imno            CDATA                    #REQUIRED
imctrlabel      NUMBER                   #REQUIRED
imlevel         (depot | operator |
                gensup | dirsup |
                unitlvl | inter |
                avum-avim | tmlvls)      #REQUIRED
syslevel        (enditem | func-system)  "enditem"
system-title    CDATA                    #IMPLIED
%imrsrc-vals;
revno           NUMBER                   #REQUIRED
chngno          NUMBER                   #REQUIRED
date            CDATA                    #IMPLIED
%refs;
%secur;>
```

b. Attributes for <***tim***>:

1. **TMNO** - The number of the current TM. The prefix TM must be included in the attribute value.
2. **TMLABEL** - The number of the TM of which this information chapter (IM) was a part when originally created; this number remains the same throughout all versions of the IM. The first time the attribute is referenced for the element it is treated as required, thereafter that it will assume the current attribute value.
3. **EIC** - The end-item code of the equipment covered in the TM of which this IM is a part. The first time the attribute is referenced for the element it is treated as required, thereafter that it will assume the current attribute value.
4. **IMNO** - Reserved for a unique identifying number of the information chapter, when and if such a numbering system is instituted; analogous to the attribute "wpno" at the work package level.
5. **IMCTRLABEL** - A label giving the sequence number of the information chapter within this version of the TM; allows an individual IM to be composed with full numbering of pages and components.
6. **IMLEVEL** - The maintenance level of the information chapter.
   (a) “OPERATOR” - Applies to operator maintenance level.
   (b) “UNITLVL” - Applies to unit maintenance level.
   (c) “DIRSUP” - Applies to direct support (DS) maintenance level.
   (d) “GENSUP” - Applies to general support (GS) maintenance level.
   (e) “INTER” - Applies to intermediate (DS/GS) maintenance level.
   (f) “DEPOT” - Applies to depot maintenance level.
   (g) “AVUM-AVIM” - Applies to aviation unit (AVUM) and intermediate (AVIM) maintenance level.
   (h) “TMLVLS” - Applies to all maintenance levels.
7. **SYSLEVEL** - Specifies whether the chapter constituents cover the full end item (“ENDITEM”) or a particular functional system (“FUNC-SYSTEM”) within the end item. When value is entered for attribute SYSLEVEL the default value is “ENDITEM”.

8. **SYSTEM-TITLE** - If the attribute value of SYSLEVEL is "FUNC-SYSTEM", this attribute is used to identify the functional system name which the chapter/work package covers.
9. **%IMRSRC-VALS;** - Refer to common parameter entities for a complete description (see L.5.7).
10. **REVNO** - The overall revision number for the information chapter.
11. **CHNGNO** - The overall change number for the information chapter.
12. **DATE** - The date of the current version of the chapter.
13. **%REFS;** - Refer to common parameter entities for a complete description (see L.5.2).
14. **%SECUR;** - Refer to common parameter entities for a complete description (see L.5.3).

F.4 **Troubleshooting Introduction Work Package <*tsintrowp*>.** The work package element **<*tsintrowp*>** is used for the introductory work package to a troubleshooting chapter that contains any general information needed to supplement the troubleshooting procedures, such as "how to use troubleshooting procedures". The element contains a work package (**<*title*>** see L.4.1.5.1) followed by either general troubleshooting information (***%titldtext;*** see L.3.3) or how to use the troubleshooting chapter (**<*howtouse*>** see K.3.1.1.7). Figures (**<*figure*>** see L.4.4.1) may be included any where within the element.

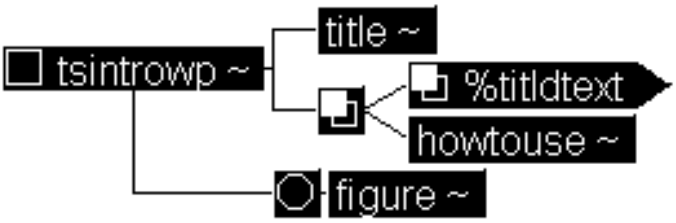

Figure 61 Troubleshooting Introduction Work Package DTD Hierarchy

a. DTD fragment for **<*tsintrowp*>**:

```
<!ELEMENT tsintrowp - - (title, ((%titldtext;)+ | howtouse)+) +(figure)>
<!ATTLIST tsintrowp
          wpno        ID                    #REQUIRED
          idmap       ENTITY                #IMPLIED
          ts-type     (manual | automated)  #IMPLIED
          %wprsrc-vals;
          %tracking;
          %wpbodyatt;
          %secur;>
```

b. Attributes for **<*tsintrowp*>**:

1. **WPNO** - The unique number assigned to this work package by the original developer. This number remains the same when the work package is reused. The work package is referenced through an ID which is (#REQUIRED) and remains with the work package for the work package life. The FOSI generates the work package sequence number. Refer to MIL-STD-40051 Part 1 to obtain the work package number format.
2. **IDMAP** - The name of an entity containing a cross-reference table of IDs and IDREFs used in different versions of the work package identified by the attribute “WPNO”. This

map is required when a work package is used in more than one technical with different sets of cross-referenced IDREFs. Use of this map is the responsibility of the application.

3. **TS-TYPE** - The type of troubleshooting contained in the work package.
4. **%WPRSRC-VALS;** - Refer to common parameter entities for a complete description (see L.5.5).
5. **%TRACKING;** - Refer to common parameter entities for a complete description (see L.5.6).
6. **%WPBODYATT;** - Refer to common parameter entities for a complete description (see L.5.4).
7. **%SECUR;** - Refer to common parameter entities for a complete description (see L.5.3).

F.5 **Troubleshooting Index Work Package <*tsindxwp*>.** The work package element <***tsindxwp***> is used for referencing to troubleshooting work packages, page locations, or more specific troubleshooting locations within the TM. The element contains a work package title (<***title***> see L.4.1.5.1), an optional general work package information (<***geninfo***> see L.4.5.7), any alert statements (***%alert;*** see L.3.2) followed by a troubleshooting index (<***tsindx***>). Volume separation (***%vol.group;*** see L.3.5) may not occur within this element.Tables (<***table***> see L.4.2.1), figures (<***figure***> see L.4.4.1) and help references (<***helplink***>) may be included any where within the element.

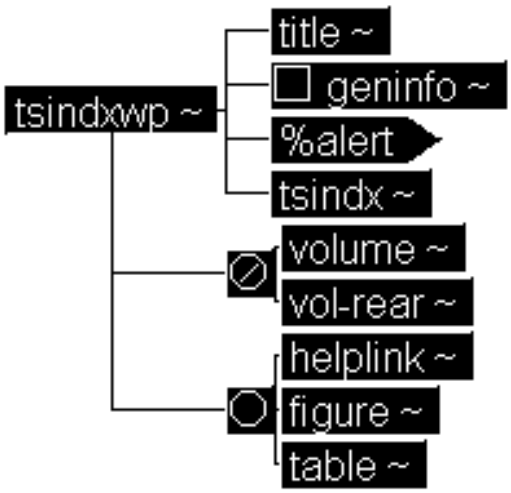

Figure 62 Troubleshooting Index Work Package DTD Hierarchy

a. DTD fragment for <***tsindxowp***>:

```
<!ELEMENT tsindxwp - - (title, geninfo?, %alert;, tsindx) -(%vol.group;)
                       +(helplink | figure | table)>
<!ATTLIST tsindxwp
            level           (depot | operator |
                             gensup | dirsup |
                             unitlvl | inter |
                             avum-avim | tmlvls)        #REQUIRED
            wpno            ID                           #REQUIRED
```

```
idmap           ENTITY                      #IMPLIED
ts-type         (manual | automated)        #IMPLIED
syslevel        (enditem | func-system)     "enditem"
system-title    CDATA                       #IMPLIED
%wprsrc-vals;
%tracking;
%navlink;
%wpbodyatt;
%secur;>
```

b. Attributes for <***tsindxwp***>:

1. **LEVEL** - The maintenance level of the work package.
   (a) “OPERATOR” - Applies to operator maintenance level.
   (b) “UNITLVL” - Applies to unit maintenance level.
   (c) “DIRSUP” - Applies to direct support (DS) maintenance level.
   (d) “GENSUP” - Applies to general support (GS) maintenance level.
   (e) “INTER” - Applies to intermediate (DS/GS) maintenance level.
   (f) “DEPOT” - Applies to depot maintenance level.
   (g) “AVUM-AVIM” - Applies to aviation unit (AVUM) and intermediate (AVIM) maintenance level.
   (h) “TMLVLS” - Applies to all maintenance levels.
2. **WPNO** - The unique number assigned to this work package by the original developer. This number remains the same when the work package is reused. The work package is referenced through an ID which is (#REQUIRED) and remains with the work package for the work package life. The FOSI generates the work package sequence number. Refer to MIL-STD-40051 Part 1 to obtain the work package number format.
3. **IDMAP** - The name of an entity containing a cross-reference table of IDs and IDREFs used in different versions of the work package identified by the attribute “WPNO”. This map is required when a work package is used in more than one technical with different sets of cross-referenced IDREFs. Use of this map is the responsibility of the application.
4. **TS-TYPE** - The type of troubleshooting contained in the work package.
5. **SYSLEVEL** - Specifies whether the chapter constituents cover the full end item (“ENDITEM”) or a particular functional system (“FUNC-SYSTEM”) within the end item. When value is entered for attribute SYSLEVEL the default value is “ENDITEM”.
6. **SYSTEM-TITLE** - If the attribute value of SYSLEVEL is "FUNC-SYSTEM", this attribute is used to identify the functional system name which the chapter/work package covers.
7. **%WPRSRC-VALS;** - Refer to common parameter entities for a complete description (see L.5.5).
8. **%TRACKING;** - Refer to common parameter entities for a complete description (see L.5.6).
9. **%NAVLINK;** - Refer to common parameter entities for a complete description (see L.5.8).
10. **%WPBODYATT;** - Refer to common parameter entities for a complete description (see L.5.4).
11. **%SECUR;** - Refer to common parameter entities for a complete description (see L.5.3).

F.5.1 The element <***tsindx***> is used for the index section within a troubleshooting index work package, which may be a malfunctions/symptoms, systems in breakout order, or testing error codes. Unless the indexes are short, a separate work package must be prepared for each type of index. A separate work package may be prepared for each functional system if appropriate to the overall size and organization of the manual; supply attributes "SYSLEVEL" and "SYSTEM-TITLE" at the work package <***tsindxwp***> level in the latter case. For each entry, indicate a reference to a troubleshooting work package, page number, work package and page number, or a corrective action.. The <***tsindx***> contains either troubleshooting categories <***ts-category***> or troubleshooting index entries <***tsindx-entry***>.

a. DTD fragment for <***tsindx***>:

```
<!ELEMENT tsindx - - (ts-category+ | tsindx-entry+)>
<!ATTLIST tsindx
            type       (system | symptom | errorcode)     "symptom"
            sysname    CDATA                               #IMPLIED
            reftype    (action | pageloc | wp | wp-page)  "wp"
            %navlink;
            %refs;
            %secur;>
```

b. Attributes for <***tsindx***>:

1. **TYPE** - Defines the troubleshooting index table format to be used by the composition system. If no value is entered for the attribute the default is “SYMPTOM”.
   (a) “SYSTEM” - Applies format for systems in breakout order troubleshooting index table.
   (b) “SYMPTOM” - Applies format for malfunction/symptom troubleshooting index table.
   (c) “ERRORCODE” - Applies format for testing error codes troubleshooting index table.
2. **SYSNAME** - Supplies the name of that system, if the current troubleshooting index covers only one functional system.
3. **REFTYPE** - Specifies reference type format to be used in the tables third column for the composition system. If no value is entered for the attribute the default is “WP”.
   (a) “ACTION” - Defines the corrective action to be taken.
   (b) “PAGELOC” - Defines to use page number to indicate where the corrective action is located.
   (c) “WP” - Defines to use the work package sequence number to indicate where the corrective action is located.
   (d) “WP-PAGE” - Defines to use both the work package sequence number and page number to indicate where the corrective action is located.
4. **%NAVLINK;** - Refer to common parameter entities for a complete description (see L.5.8).
5. **%REFS;** - Refer to common parameter entities for a complete description (see L.5.2).
6. **%SECUR;** - Refer to common parameter entities for a complete description (see L.5.3).

F.5.1.1 The element <***ts-category***> a category within a troubleshooting procedures index, which may be divided into major functional systems, symptom types, error code sources, or method of detection. The element contains a category (<***title***> see L.4.1.5.1), any alert statements (***%alert;*** see L.3.2) followed by troubleshooting index entry (<***tsindx-entry***>).

a. DTD fragment for <***ts-category***>:

```
<!ELEMENT ts-category - - (title, %alert;, tsindx-entry+)>
<!ATTLIST ts-category
          catg-name       CDATA           #REQUIRED
          %navlink;
          %nodeloc;
          %refs;
          %secur;>
```

b. Attributes for <***ts-category***>:

1. **CATG-NAME** - Specifies the category name, which is the heading that will appear in the table.
2. **%NAVLINK;** - Refer to common parameter entities for a complete description (see L.5.8).
3. **%NODELOC;** - Refer to common parameter entities for a complete description (see L.5.9).
4. **%REFS;** - Refer to common parameter entities for a complete description (see L.5.2).
5. **%SECUR;** - Refer to common parameter entities for a complete description (see L.5.3).

F.5.1.1.1 The element <***tsindx-entry***> (see F.5.1.2) is a category troubleshooting index entry.

F.5.1.2 The element <***tsindx-entry***> a troubleshooting index entry.

a. DTD fragment for <***tsindx-entry***>:

```
<!ELEMENT tsindx-entry - o (sympno?, name, (action | navref | xref))>
<!ATTLIST tsindx-entry
          pageref         %yesorno;       #IMPLIED
          %refs;
          %secur;>
```

b. Attributes for <***tsindx-entry***>:

1. **PAGEREF** - Specifies whether the reference includes a page number; a non-zero value indicates that a page number should be referenced.
2. **%REFS;** - Refer to common parameter entities for a complete description (see L.5.2).
3. **%SECUR;** - Refer to common parameter entities for a complete description (see L.5.3).

F.5.1.2.1 The element <***sympno***> an assigned number identifying a symptom which appears in the symptom index and later is referenced in troubleshooting work packages. The element contains inline text (***%text;*** see L.3.6) which allows the embedding of data elements. Generally, the narrative is entered using #PCDATA..

a. DTD fragment for <***sympno***>:

```
<!ELEMENT sympno - - (%text;)>
<!ATTLIST sympno
          %refs;>
```

b. Attributes for <***sympno***>:

1. **%REFS;** - Refer to common parameter entities for a complete description (see L.5.2).

F.5.1.2.2 The element <***name***> (see L.4.5.11) describes the symptom or error code being referenced in the index. The information is contained in the standard troubleshooting index table in the second column.

F.5.1.2.3 The element <***action***> is the corrective action to be taken. The information is contained in the standard troubleshooting index table in the third column. Refer to the common elements section for a complete description.(see F.10.6)

F.5.1.2.4 The element <***navref***> (see L.4.7.10) is navigational reference to the troubleshooting procedure.

F.5.1.2.5 The element <***xref***> (see L.4.1.3.8) is used to specify the reference to the corrective action.

F.5.2 The element <***helplink***> contains a link to application help information or reference information and can be inserted anywhere in certain work packages. An example is "how to use" information or current faultstate. A helplink is used only when the document is presented as an ETM or IETM.

a. DTD fragment for <***helplink***>:

```
<!ELEMENT helplink - o (navref)+ >
<!ATTLIST helplink
          id     ID   #REQUIRED>
```

b. Attributes for <***helplink***>:

1. **ID** - Specifies the unique identifier of the help link.

F.6 **Troubleshooting Test Module Work Package <*testmodulewp*>.** A troubleshooting-support test module work package contains a work package title (<***title***> see L.4.1.5.1) which may be followed by an optional work package summary (<***wpsum***> see L.4.6.1), work package initial setup (<***wpinfo***> see L.4.6.2), general work package information (<***geninfo***> see L.4.5.7) and alert statements (***%alert;*** see L.3.2). This information must be followed by either a support test module (<***testmodule***>), an index of test set message words or procedures connected with message words (<***messages***>), or diagnostic fault reports (<***faultreports***>). Volume separation (***%vol.group;*** see L.3.5) may not occur within this element. Help reference links (<***helplink***> see F.5.2) may be included any where within the element.

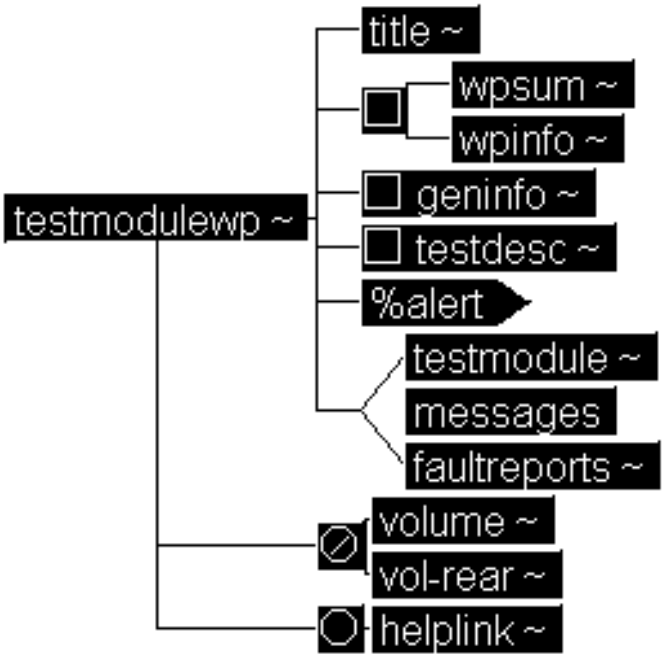

Figure 63 Troubleshooting Test Module Work Package DTD Hierarchy

a. DTD fragment for <***testmodulewp***>

```
<!ELEMENT testmodulewp - - (title, (wpsum, wpinfo)?, geninfo?, testdesc?,
                           %alert;, (testmodule | messages | faultreports))
                            -(%vol.group;) +(helplink)>
<!ATTLIST testmodulewp
          level      (depot | operator | gensup | dirsup |
                     unitlvl | inter | avum-avim | tmlvls)  #REQUIRED
          wpno       ID                                     #REQUIRED
          idmap      ENTITY                                 #IMPLIED
          ts-type    (manual | automated)                   #IMPLIED
          %wprsrc-vals;
          %tracking;
          %navlink;
          %wpbodyatt;
          %secur;>
```

b. Attributes for <***testmodulewp***>

1. **LEVEL** - The maintenance level of the work package.
   (a) “OPERATOR” - Applies to operator maintenance level.
   (b) “UNITLVL” - Applies to unit maintenance level.
   (c) “DIRSUP” - Applies to direct support (DS) maintenance level.
   (d) “GENSUP” - Applies to general support (GS) maintenance level.

(e) “INTER” - Applies to intermediate (DS/GS) maintenance level.

(f) “DEPOT” - Applies to depot maintenance level.

(g) “AVUM-AVIM” - Applies to aviation unit (AVUM) and intermediate (AVIM) maintenance level.

(h) “TMLVLS” - Applies to all maintenance levels.

2. **WPNO** - The unique number assigned to this work package by the original developer. This number remains the same when the work package is reused. The work package is referenced through an ID which is (#REQUIRED) and remains with the work package for the work package life. The FOSI generates the work package sequence number. Refer to MIL-STD-40051 Part 1 to obtain the work package number format.
3. **IDMAP** - The name of an entity containing a cross-reference table of IDs and IDREFs used in different versions of the work package identified by the attribute “WPNO”. This map is required when a work package is used in more than one technical with different sets of cross-referenced IDREFs. Use of this map is the responsibility of the application.
4. **TS-TYPE** - The type of troubleshooting contained in the work package.
5. **%WPRSRC-VALS;** - Refer to common parameter entities for a complete description (see L.5.5).
6. **%TRACKING;** - Refer to common parameter entities for a complete description (see L.5.6).
7. **%NAVLINK;** - Refer to common parameter entities for a complete description (see L.5.8).
8. **%WPBODYATT;** - Refer to common parameter entities for a complete description (see L.5.4).
9. **%SECUR;** - Refer to common parameter entities for a complete description (see L.5.3).

F.6.1 The element <***testdesc***> contains a narrative explanation of a test module within a test module work package. The element contains paragraphs of text that may be grouped into sections or subsections (***%titldtext;*** see L.3.3).

a. DTD fragment for <***testdesc***>:

```
<!ELEMENT testdesc - - %titldtext;>
<!ATTLIST testdesc
          %refs;
          %secur;>
```

b. Attributes for <***testdesc***>:

1. **%REFS;** - Refer to common parameter entities for a complete description (see L.5.2).
2. **%SECUR;** - Refer to common parameter entities for a complete description (see L.5.3).

F.6.2 The element <***testmodule***> is a test unit that does not represent a start-to-finish troubleshooting, but is used as a troubleshooting support or fault isolation fragment. It may be a fault isolation step used in more than one troubleshooting procedure and/or may be used to direct the user to the proper troubleshooting work package or entry point. The element contains a test module title (<***title***> see L.4.1.5.1) followed by optional introductory paragraph (<***para***> see L.4.1.5.3) with any alert statements (<***specpara***> see L.4.1.1.1) followed by test module(s). A test module may be in the form of one of the following:

- Automated or semi-automated testing using external test sets (<***tsproc***> or <***flowtree***>) with hookup (<***hookup***>) and disconnect (<***disconnect***>) instructions

- Series of operational checks (<***opcheck***>)
- Procedural test (<***test***>)
- Fragment of a flowtree (<***flowtree***>)
- Narrative description of a test procedure (<***testdesc***>)

A navigational reference (<***navref***> see L.4.7.10) may follow the test module procedures. Figure(s) (<***figure***> see L.4.4.1) and table(s) (<***table***> see L.4.2.1) may be included any where in the element. The <***testmodule***> consists of the elements described below:

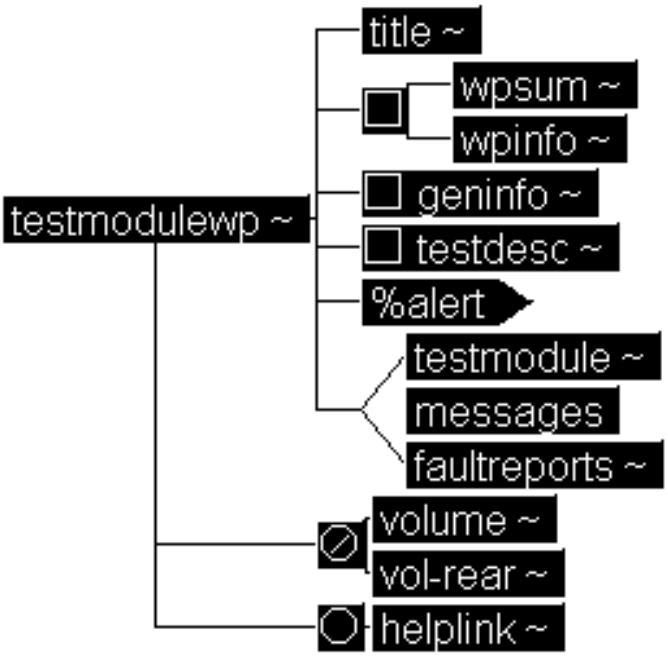

Figure 64 Test Module DTD Hierarchy

a. DTD fragment for <***testmodule***>:

```
<!ELEMENT testmodule - o  (title?, (para | specpara)*, ((hookup,
                          (flowtree | tsproc)?, disconnect) | flowtree
                          | test | opcheck | testdesc)+, navref*)+
                          +(figure | table)>
<!ATTLIST testmodule
          %navlink;
          %nodeloc;
          id              ID              #REQUIRED
          contentrefs     IDREFS          #CONREF>
```

b. Attributes for <***testmodule***>:

1. **%NAVLINK;** - Refer to common parameter entities for a complete description (see L.5.8).
2. **%NODELOC;** - Refer to common parameter entities for a complete description (see L.5.9).
3. **ID** - Specifies the unique identifier of the current test module instance.

4. **CONTENTREFS** - References the identifier(s) of content elsewhere in the document to be used as content of the current test module. When a value is entered, the content of the element becomes EMPTY and the referenced information is used.

F.6.2.1 The element <***hookup***> contains procedures for hooking up external test equipment to the system under test; used for automated or semi-automated test equipment or for breakout boxes. The element contains an optional title (<***title***> see L.4.1.5.1), an optional general information (<***geninfo***> see L.4.5.7), any alert statements (***%alert;*** see L.3.2) followed by hookup procedures (<***proc***> see L.4.1.8.1). Navigational reference (<***navref***> see L.4.7.10) may be included any where in the element.

a. DTD fragment for <***hookup***>:

```
<!ELEMENT hookup - - (title?, geninfo?, %alert;, proc+)  +(navref) >
<!ATTLIST hookup
          %navlink;
          %nodeloc;
          %refs;
          %secur;>
```

b. Attributes for <***hookup***>:

1. **%NAVLINK;** - Refer to common parameter entities for a complete description (see L.5.8).
2. **%NODELOC;** - Refer to common parameter entities for a complete description (see L.5.9).
3. **%REFS;** - Refer to common parameter entities for a complete description (see L.5.2).
4. **%SECUR;** - Refer to common parameter entities for a complete description (see L.5.3).

F.6.2.2 The element <***flowtree***> contains a start-to-finish diagnostic flow tree fragment, which consists of discrete procedural. This type of troubleshooting may be presented in diagrammatic format or narrative format. Refer to the common elements section for a complete description.(see F.10.8)

F.6.2.3 The element <***tsproc***> contains a distinct unit of troubleshooting procedures (<***subproc***> see F.10.7.1) or multiple steps (<***step***> see F.10.3). Refer to the common elements section for a complete description.(see F.10.7)

F.6.2.4 The element <***test***> (see F.10.8.2.1.1) is a testing procedure that is generally followed by a query on its outcome, a listing of the normal indication or response, a reference to another test or location, or a corrective action.

F.6.2.5 The element <***opcheck***> contains an ordered set of operational test procedures to obtain results that will point the user to the appropriate troubleshooting work package contained in a <***testmodulewp***> element. An operational check element does not itself contain start-to-finish diagnostic troubleshooting. This element represents the table element for tabular presentation. The element contains an optional title (<***title***> see L.4.1.5.1) followed by operational check steps (<***checkstep***>). Table (<***table***> see L.4.2.1) may be included any where within the element.

a. DTD fragment for <***opcheck***>:

```
<!ELEMENT opcheck - o (title?, checkstep+) +(table)>
<!ATTLIST opcheck
          %navlink;
```

```
%nodeloc;
%secur;
id              ID              #REQUIRED
contentrefs     IDREFS          #CONREF>
```

b. Attributes for <***opcheck***>:

1. **%NAVLINK;** - Refer to common parameter entities for a complete description (see L.5.8).
2. **%NODELOC;** - Refer to common parameter entities for a complete description (see L.5.9).
3. **%SECUR;** - Refer to common parameter entities for a complete description (see L.5.3).
4. **ID** - Specifies the unique identifier of the current end block.
5. **CONTENTREFS** - References the identifier(s) of content elsewhere in the document to be used as content of the current test module. When a value is entered, the content of the element becomes EMPTY and the referenced information is used.

c. Document instance sample for <***opcheck***>:

```
<opcheck id="T00032–9–xxxx-xxx-xx-opcheck">
<checkstep id="T00032–9–xxxx-xxx-xx-opcheck-3">
<step><para>On URO, press RCVD key.</para></step>
<indication>
<para>URO displays the following:<graphic boardno="uro-display"></para>
<action>
<step><para>If URO MESSAGE DESCRIPTOR displays any of the following,
replace BUU:
<randlist>
<item>FA FAULT</item>
<item>BAR FAIL</item>
<item>CSC LIM.</item></randlist></para></step>
<step><para>If URO MESSAGE DESCRIPTOR displays SDU ALRM, perform the
</para></step></action></checkstep></opcheck>
```

d. Formatted document instance sample for <***opcheck***>:

+9pt-9pt+9pt-9pt+9pt-9pt+9pt-9pt+9pt-9pt+9pt-9pt

ITEM/PROCEDURE	NORMAL INDICATION	CORRECTIVE ACTION
3. On URO, press RCVD key.	URO displays the following:	1. If URO MESSAGE DESCRIPTOR displays any of the following, replace BUU: FA FAULT BAR FAIL CSC LIM. 2. If URO MESSAGE DESCRIPTOR displays SDU ALRM, perform the

Figure 65 Sample <opcheck>.

F.6.2.5.1 The element <***checkstep***> contains a step in an operational check test. This unit contains a test step (<***step***>) and either a response from operational test (<***indication***>) or from an automated/semi-automated testing (<***outcome***>). It represents the row element in the tabular presentation.

a. DTD fragment for <***checkstep***>:

```
<!ELEMENT checkstep - - (step,  (indication+ | outcome+))>
<!ATTLIST checkstep
          %navlink;
          %nodeloc;
          %secur;
          id              ID              #REQUIRED>
```

b. Attributes for <***checkstep***>:

1. **%NAVLINK;** - Refer to common parameter entities for a complete description (see L.5.8).
2. **%NODELOC;** - Refer to common parameter entities for a complete description (see L.5.9).
3. **%SECUR;** - Refer to common parameter entities for a complete description (see L.5.3).
4. **ID** - Specifies the unique identifier of the current end block.

F.6.2.5.1.1 The element <***step***> specifies the operation test step. The step information is used in the first column in operation test table. Refer to the common elements section for a complete description.(see F.10.3)

F.6.2.5.1.2 The element <***indication***> contains the normal or expected indication in response to the operational test. The element contains the second column, normal indication, and third column, correction action<***action***>, of a standard operational test troubleshooting table. With the exception of <***action***>, the remaining information is placed in the second column of the table. There may be more than one <***indication***> for each test. Refer to the common elements section for a complete description.(see F.10.5)

F.6.2.5.1.3 The element <***outcome***> contains the results from automated or semi-automated testing in response to the operational test. The element contents are placed in the second column, outcome results. There may be more than one <***outcome***> for each test. Refer to the common elements section for a complete description.(see F.10.4)

F.6.2.6 The element <***testdesc***> (see F.6.1) contains a narrative explanation for each test module described.

F.6.3 The element <***messages***> contains either an index of message words (<***messageindx***>) or procedures to follow in response to a message word (<***messageproc***>).

a. DTD fragment for <***messages***>:

```
<!ELEMENT messages - - (messageindx | messageproc+) +(figure | table)>
```

F.6.3.1 The element <***messageindx***> contains optional general information (<***geninfo***> see L.4.5.7) followed by message word indexes (<***messagewords***>) of either automated/semi-automated message words or built-in diagnostics fault reports.

a. DTD fragment for <***messageindx***>:

```
<!ELEMENT messageindx - o (geninfo?, messagewords+)>
<!ATTLIST messageindx
```

```
indxcols   (2 | 3)              #REQUIRED
reftype    (wp | page | tsloc)  "page"
%refs;
%secur;>
```

b. Attributes for <***messageindx***>:

1. **INDXCOLS** - Specifies number of columns in the index; although an index of message words will have three columns, an index of fault reports from built-in diagnostics may have only two.
2. **REFTYPE** - Specifies the type of reference location used. When no attribute value is entered, the default is "PAGE".
   (a) "WP" - Applies the reference using the work package sequence number.
   (b) "PAGE" - Applies the reference using the page number.
   (c) "TSLOC" - Applies the reference using the troubleshooting procedure..
3. **%REFS;** - Refer to common parameter entities for a complete description (see L.5.2).
4. **%SECUR;** - Refer to common parameter entities for a complete description (see L.5.3).

F.6.3.1.1 The element <***messagewords***> contain a list of either message words (<***word***>) or fault messages from built-in diagnostics (<***faultmsg***>). The list elements are followed by an associated action (<***action***>) with troubleshooting procedure references (<***xref***>) or an action (<***action***>) and a follow-on procedure (<***follow-on***>). This element represents the row element for tabular presentation.

a. DTD fragment for <***messagewords***>:

```
<!ELEMENT messagewords - o ((word, action, xref) |
                            (faultmsg, action, follow-on?))>
<!ATTLIST messagewords
          %refs;
          %secur;>
```

b. Attributes for <***messagewords***>:

1. **%REFS;** - Refer to common parameter entities for a complete description (see L.5.2).
2. **%SECUR;** - Refer to common parameter entities for a complete description (see L.5.3).

F.6.3.1.1.1 The element <***word***> contains a particular message word occurring in a message reference index. A message word is obtained by automated or semi-automated test equipment. This element represents the table element for the first column.

a. DTD fragment for <***word***>:

```
<!ELEMENT word - - (#PCDATA)>
<!ATTLIST word
          id      ID      #REQUIRED
          %navlink;
          %secur;>
```

b. Attributes for <***word***>:

1. **ID** - A unique identifier for the message word code.
2. **%NAVLINK;** - Refer to common parameter entities for a complete description (see L.5.8).
3. **%SECUR;** - Refer to common parameter entities for a complete description (see L.5.3).

c. Document instance fragment for ***<messages>*** for message word:

```
<messages>
<messageindx cols="3">
<messagewords>
<word id="mess1">001</word>
<action><para>Relay Assembly 2A27 (RYA)</para></action>
<xref pagelocid="T00032-9-xxxx-xxx–xx-page"></messagewords>
<messagewords>
<word id="mess3">003</word>
<action><para>-13° Elevation Switch 2A30 (TRL)</para></action>
<xref pagelocid="T00033-9-xxxx-xxx–xx-page"></messagewords>
<messagewords>
<word id="mess5">005</word>
<action><para>AP Low Ammo Sensor 2A21 (APL)</para></action>
<xref pagelocid="T00034-9-xxxx-xxx–xx-page"></messagewords>
<messagewords>
<word id="mess6">006</word>
<action><para>-3° Elevation Swith 2A29 (GRL)</para></action>
<xref pagelocid="T00035-9-xxxx-xxx–xx-page"></messagewords>
<messagewords>
<word id="mess7">007</word>
<action><para>Gunner's Position Indicator 2A9 (GPI)</para></action>
<xref pagelocid="T00036-9-xxxx-xxx–xx-page"></messagewords>
<messagewords>
<word id="mess9">009</word>
<action><para>EP  Weapon 2A15 (GUN)</para></action>
<xref pagelocid="T00037-9-xxxx-xxx–xx-page">
</messagewords></messageindx></messages>
```

d. Formatted document instance fragment for ***<messages>*** for message word:

MESSAGE WORD NUMBER	ITEM	PAGE
001	Relay Assembly 2A27 (RYA)	0032 00-1
003	-13° Elevation Switch 2A30 (TRL)	0033 00-1
005	AP Low Ammo Sensor 2A21 (APL)	0034 00-1
006	-3° Elevation Swith 2A29 (GRL)	0035 00-1
007	Gunner's Position Indicator 2A9 (GPI)	0036 00-1
009	EP Weapon 2A15 (GUN)	0037 00-1

Figure 66 Sample <messages> for message word.

F.6.3.1.1.2 The element <***action***> refers to the message word description. This element represents the table element for the second column. Refer to the common elements section for a complete description.(see F.10.6)

F.6.3.1.1.3 The element <***xref***> refers to the reference location for the troubleshooting procedure. Refer to the common elements section for a complete description. (see L.4.1.3.8)

F.6.3.1.1.4 The element <***faultmsg***> contains the actual message returned from built-in diagnostic software or equipment. This element represents the table element for the first column.

a. DTD fragment for <***faultmsg***>:

```
<!ELEMENT faultmsg - - (#PCDATA)>
<!ATTLIST faultmsg
          id      ID       #REQUIRED
          %navlink;
          %secur;>
```

b. Attributes for <***faultmsg***>:

1. **ID** - A unique identifier for the fault message.
2. **%NAVLINK;** - Refer to common parameter entities for a complete description (see L.5.8).
3. **%SECUR;** - Refer to common parameter entities for a complete description (see L.5.3).

F.6.3.1.1.5 The element <***action***> refers to the maintenance actions to be performed from the fault message. Specify a reference to the detailed description to perform the maintenance action. This element represents the table element for the second column. Refer to the common elements section for a complete description.(see F.10.6)

F.6.3.1.1.6 The element <***follow-on***> specifies any follow-on action to be performed after the maintenance action has be completed. The element contains either a paragraph (<***para***> see L.4.1.5.3), at least one procedural step (<***step1***> see L.4.1.8.2), or a cross reference to the follow-on procedure (<***xref***> see L.4.1.3.8).

a. DTD fragment for <***follow-on***>:

```
<!ELEMENT follow-on - - (para | step1+ | xref)>
<!ATTLIST follow-on
          id      ID        #REQUIRED
          %navlink;
          %secur;>
```

b. Attributes for <***follow-on***>:

1. **ID** - A unique identifier for the follow-on procedure.
2. **%NAVLINK;** - Refer to common parameter entities for a complete description (see L.5.8).
3. **%SECUR;** - Refer to common parameter entities for a complete description (see L.5.3).

F.6.3.2 The element <***messageproc***> contains a narrative follow-on or corrective procedures related to a message word. The element contains message procedure title (<***title***> see L.4.1.5.1) followed by at least one message word procedure. The message work procedure contains the message word (<***word***> see F.6.3.1.1.1), optional introductory paragraphs (<***para***> see L.4.1.5.3), optional illustrations (<***graphic***> see L.4.4.1.2) and a message word procedure (<***proc***> see L.4.1.8.1).

a. DTD fragment for <***messageproc***>:

```
<!ELEMENT messageproc - o (title, (word, para*, graphic*, proc)+)>
<!ATTLIST messageproc
          %navlink;
          %refs;
          %secur;>
```

b. Attributes for <***messageproc***>:

1. **%NAVLINK;** - Refer to common parameter entities for a complete description (see L.5.8).
2. **%REFS;** - Refer to common parameter entities for a complete description (see L.5.2).
3. **%SECUR;** - Refer to common parameter entities for a complete description (see L.5.3).

F.6.4 The element <***faultreports***> is used for a troubleshooting reference table contained in a test module work package. These fault reports are generated by automated and/or built-in diagnostics. The element contains an optional title (<***title***> see L.4.1.5.1), general information (<***geninfo***> see L.4.5.7) and message words (<***messagewords***> see F.6.3.1.1). Figure(s) (<***figure***> see L.4.4.1) and table(s) (<***table***> see L.4.2.1) may be included any where in the element.

a. DTD fragment for <***faultreports***>:

```
<!ELEMENT faultreports - - (title?, geninfo?, messagewords+) +(figure | table)>
<!ATTLIST faultreports
          indxcols     (2 | 3)     #REQUIRED
          %refs;
          %secur;>
```

b. Attributes for <***faultreports***>:

1. **INDXCOLS** - Specifies number of columns in the index; although an index of message words will have three columns, an index of fault reports from built-in diagnostics may have only two.
2. **%REFS;** - Refer to common parameter entities for a complete description (see L.5.2).
3. **%SECUR;** - Refer to common parameter entities for a complete description (see L.5.3).

c. Document instance fragment for <***faultreports***>:

```
<faultreports indxcols="3">
<messagewords>
<faultmsg id="flt–ged-brake">ADJ GED BRAKE LINKAGE</faultmsg>
<action><para>Adjust Gun Elevation Drive Brake Linkage <xref pretext="("
posttext=")" wpid="M00041–9-xxxx-xxx–x></para></action></messagewords>
<messagewords>
<faultmsg id="flt–ged-brake">FAULTY CABLE 2W302 (2W310)</faultmsg>
<action><para>Replace Cable Assembly 2W310 <xref pretext="(" posttext=")"
wpid="M00020–9-xxxx-xxx–x></para></action>
<follow-on><para>If no cable/connector pin damage is visible and cable
connections are tight, perform STE-M1/FVS Cable Test 2393 (open/short)
```

on cable 2W310 plub P7 before replacement. If cable checks ok, Replace DECA *<xref pretext="(" posttext=")" wpid="M00045–9-xxxx-xxx–x>.</para></follow-on></messagewords></faultreports>*

d. Formatted document instance fragment for ***<faultreports>***:

FAULT MESSAGE	MAINTENANCE ACTION	FOLLOW-ON ACTION
ADJ GED BRAKE LINKAGE	Adjust Gun Elevation Drive Brake Linkage (WP 0041 00)	
FAULTY CABLE 2W302 (2W310)	Replace Cable Assembly 2W310 (WP 0020 00)	If no cable/connector pin damage is visible and cable connections are tight, perform STE-M1/FVS Cable Test 2393 (open/short) on cable 2W310 plub P7 before replacement. If cable checks ok, Replace DECA (WP 0045 00).

Figure 67 Sample <faultreports>.

F.7 **Troubleshooting Procedures Work Package *<tswp>*.** The troubleshooting procedures work package contains start-to-finish troubleshooting procedures, which result in fault isolation and rectification and ultimately either a return to readiness status or referral to a higher maintenance level. Troubleshooting procedures can be presented in tabular or narrative format or in diagrammatic flow trees. In electronic presentations a ***<tswp>*** may be made up of simple sequential nodes (ETMs) or be traversed as filtered nodes (IETMs). Work packages may be qualified by skill level, maintenance level, and configuration applicability. The element contains faults under test (fault-ids, troubleshooting procedures (tswpinfo, either***<tswp>*** consist of the elements described below:

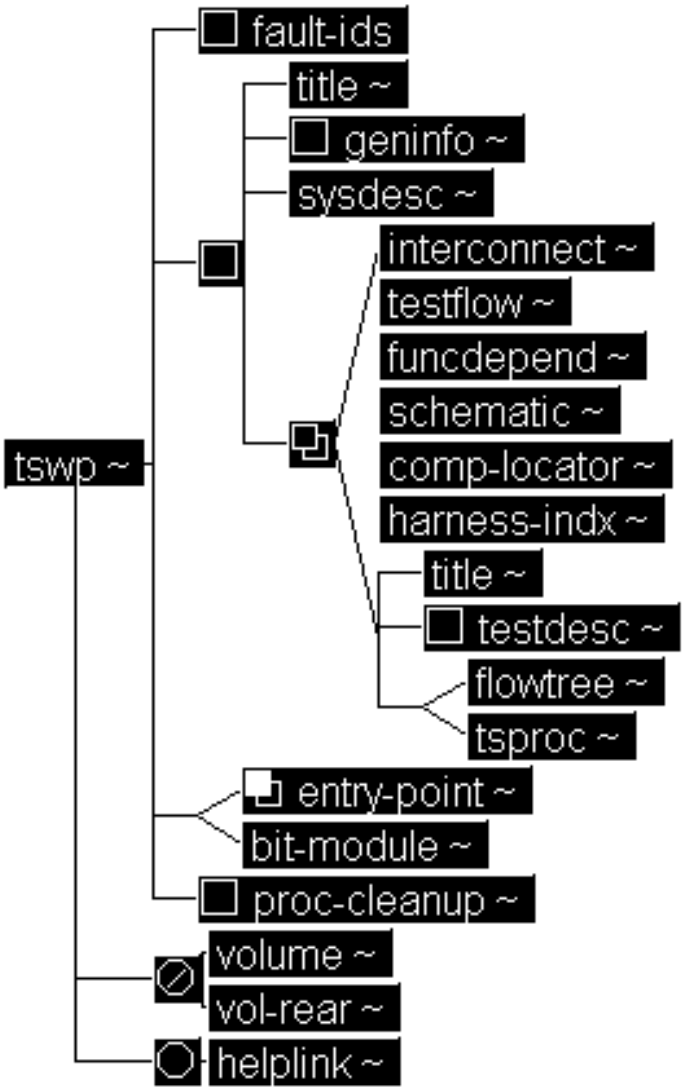

Figure 68 Troubleshooting Procedures Work Package DTD Hierarchy

a. DTD fragment for ***<tswp>***

```
<!ELEMENT tswp - - (fault-ids?, (%tswpinfo;)?, (entry-point+ | bit-module),
                    proc-cleanup? ) -(%vol.group;) +(helplink)>
<!ATTLIST tswp
          level           (depot | operator |
                            gensup | dirsup |
                            unitlvl | inter|
                            avum-avim | tmlvls )     #REQUIRED
            wpno            ID                       #REQUIRED
```

```
idmap           ENTITY                  #IMPLIED
ts-type         (manual | automated |
                auto-followon )         #IMPLIED
skilllvl        NUTOKEN                 #IMPLIED
applic          CDATA                   #IMPLIED
assocwp         IDREFS                  #IMPLIED
%navlink;
%wprsrc-vals;
%tracking;
%wpbodyatt;
%secur;>
```

b. Attributes for <***tswp***>

1. **LEVEL** - The maintenance level of the work package.
   (a) “OPERATOR” - Applies to operator maintenance level.
   (b) “UNITLVL” - Applies to unit maintenance level.
   (c) “DIRSUP” - Applies to direct support (DS) maintenance level.
   (d) “GENSUP” - Applies to general support (GS) maintenance level.
   (e) “INTER” - Applies to intermediate (DS/GS) maintenance level.
   (f) “DEPOT” - Applies to depot maintenance level.
   (g) “AVUM-AVIM” - Applies to aviation unit (AVUM) and intermediate (AVIM) maintenance level.
   (h) “TMLVLS” - Applies to all maintenance levels.
2. **WPNO** - The unique number assigned to this work package by the original developer. This number remains the same when the work package is reused. The work package is referenced through an ID which is (#REQUIRED) and remains with the work package for the work package life. The FOSI generates the work package sequence number. Refer to MIL-STD-40051 Part 1 to obtain the work package number format.
3. **IDMAP** - The name of an entity containing a cross-reference table of IDs and IDREFs used in different versions of the work package identified by the attribute “WPNO”. This map is required when a work package is used in more than one technical with different sets of cross-referenced IDREFs. Use of this map is the responsibility of the application.
4. **TS-TYPE** - The type of troubleshooting contained in the work package.
   (a) “MANUAL” - Applies to manual troubleshooting diagnostic.
   (b) “AUTOMATED” - Applies to automated and/or built-in troubleshooting diagnostic.
   (c) “AUTO-FOLLOWON” - Applies to automated and/or built-in troubleshooting follow-on procedures.
5. **SKILLLVL** - The military skill level required to perform any procedures contained in the work package.
6. **APPLIC** - Used to qualify the applicability of the work package by equipment configuration.
7. **ASSOCWP** - The attribute points to related work packages to which the user may want to have access during troubleshooting; in particular, the attribute should point to: <***techdescwp***>, technical descriptive material; <***testmodulewp***>, tests used at the outset of troubleshooting

or during diagnostics; and <***maintwp***>, instructions for completing rectification procedures needed during diagnostics.

8. **%NAVLINK;** - Refer to common parameter entities for a complete description (see L.5.8).
9. **%WPRSRC-VALS;** - Refer to common parameter entities for a complete description (see L.5.5).
10. **%TRACKING;** - Refer to common parameter entities for a complete description (see L.5.6).
11. **%WPBODYATT;** - Refer to common parameter entities for a complete description (see L.5.4).
12. **%SECUR;** - Refer to common parameter entities for a complete description (see L.5.3).

F.7.1 The element <***fault-ids***> contains any fault under test in the work package. Used to collect all referenceable fault IDs that can be used to track fault status.

a. DTD fragment for <***fault-ids***>:

```
<!ELEMENT fault-ids - o  (symprefs, fault)+>
```

F.7.1.1 The element <***symprefs***> reference(s) to a fault symptom number(s) that are being tested in the work package. These numbers appear above an entry-point title. The element contains the parameter entity ***%text;***.(see L.3.6)

a. DTD fragment for <***symprefs***>:

```
<!ELEMENT symprefs - o (%text;)>
<!ATTLIST symprefs
          number    (single | multiple) #IMPLIED
          symptoms  IDREFS              #IMPLIED >
```

b. Attributes for <***symprefs***>:

1. **NUMBER** - The number of fault symptom(s) being referenced is entered as either single or multiple entry-point fault symptom number.
2. **SYMPTOMS** - A reference(s) to the symptom entry-point.

F.7.1.2 The element <***fault***> contains possible fault description in a system or component under test; contained in <***fault-ids***> that collects all possible faults to be tested during the current troubleshooting procedure. A fault is identified by its components: system/component name (<***name***> see L.4.5.11) and part number (<***partno***> see L.4.5.13) or model number (<***modelno***> see L.4.5.10) or national stock number (<***nsn***> see L.4.5.12). The fault may be further qualified by a fault description (<***faultdesc***>). The IDs established for the faults are then used to track faults until only a single fault reference remains and a fault has been isolated.

a. DTD fragment for <***fault***>:

```
<!ELEMENT fault - -  (name, (partno | nsn | modelno)?, faultdesc?)>
<!ATTLIST fault
          id              ID              #REQUIRED
          parent          %yesorno;       #IMPLIED
          child           %yesorno;       #IMPLIED
```

```
partbase        IDREFS          #REQUIRED
theory          IDREFS          #IMPLIED
%secur;>
```

b. Attributes for <***fault***>:

1. **ID** - Specifies the fault's unique identifier.
2. **PARENT** - Specifies whether the current fault may cause an apparent fault in the faulty component's functional parent.
3. **CHILD** - Specifies whether the current fault may cause an apparent fault in the faulty component's component parts.
4. **PARTBASE** - References identifier(s) of a part or parts contained in the manual's supporting information chapter; this is the part related to the fault.
5. **THEORY** - References identifier(s) of theory of operation material elsewhere in the manual that is related to the faulty component's function.
6. **%SECUR;** - Refer to common parameter entities for a complete description (see L.5.3).

F.7.1.2.1 The element <***faultdesc***> describes the fault. The element contains the parameter entity ***%text;***.(see L.3.6)

a. DTD fragment for <***faultdesc***>:

```
<!ELEMENT faultdesc - o (%text;)>
<!ATTLIST faultdesc
          id              ID              #IMPLIED>
```

b. Attributes for <***faultdesc***>:

1. **ID** - Specifies the unique identifier of the current fault description.

F.7.2 The parameter entity ***%tswpinfo;*** describes the troubleshooting work package main procedures. Each element is defined below.

a. DTD fragment for ***%tswpinfo;***:

```
<!ENTITY % tswpinfo "title, geninfo?, sysdesc, (interconnect | testflow |
                     funcdepend | schematic | comp-locator | harness-indx |
                     (title, testdesc?, (flowtree | tsproc)))*">
```

F.7.2.1 The element <***title***>(see L.4.1.5.1) defines the work package title. (see L.4.1.5.1)

F.7.2.2 The element <***geninfo***> (see L.4.5.7) allows introductory information about the work package.

F.7.2.3 The element <***sysdesc***> is used for description of the system/subsystem under test provided as supporting technical information; contained either as an optional introductory section of a troubleshooting work package or in a stand-alone technical description work package. The element contains the system description narrative (***%titldtext;*** see L.3.3).

a. DTD fragment for <***sysdesc***>:

```
<!ELEMENT sysdesc - o (%titldtext;)+>
```

```
<!ATTLIST sysdesc
          %navlink;
          %refs;
          %secur;>
```

b. Attributes for <***sysdesc***>:

1. **%NAVLINK;** - Refer to common parameter entities for a complete description (see L.5.8).
2. **%REFS;** - Refer to common parameter entities for a complete description (see L.5.2).
3. **%SECUR;** - Refer to common parameter entities for a complete description (see L.5.3).

F.7.2.4 The element <***interconnect***> contains diagrams or other means of presenting the electrical and electronic connections between components of the system under test. May be in an introductory section to a troubleshooting work package (<***tswp***>) or be an element in a supporting technical description work package (<***techdescwp***> see F.8).

a. DTD fragment for <***interconnect***>:

```
<!ELEMENT interconnect - - (title, (specpara | para)?, (figure | table))>
<!ATTLIST interconnect
          %navlink;
          %refs;
          %secur;>
```

b. Attributes for <***interconnect***>:

1. **%NAVLINK;** - Refer to common parameter entities for a complete description (see L.5.8).
2. **%REFS;** - Refer to common parameter entities for a complete description (see L.5.2).
3. **%SECUR;** - Refer to common parameter entities for a complete description (see L.5.3).

F.7.2.5 The element <***testflow***> contains text (***%titldtext;*** see L.3.3), figures (<***figure***> see L.4.4.1), and tables (<***table***> see L.4.2.1) for presenting the flow of the troubleshooting testing. May be in an introductory section to a troubleshooting work package (<***tswp***>) or be an element in a supporting technical description work package (<***techdescwp***> seeF.8).

a. DTD fragment for <***testflow***>:

```
<!ELEMENT testflow - - ((%titldtext;)+, (figure | table)+)>
<!ATTLIST testflow
          %navlink;
          %refs;
          %secur;>
```

b. Attributes for <***testflow***>:

1. **%NAVLINK;** - Refer to common parameter entities for a complete description (see L.5.8).
2. **%REFS;** - Refer to common parameter entities for a complete description (see L.5.2).
3. **%SECUR;** - Refer to common parameter entities for a complete description (see L.5.3).

F.7.2.6 The element <***funcdepend***> contains diagrams (<***figure***> seeL.4.4.1) or other means (<***para***> seeL.4.1.5.3) of presenting the functional dependencies of components that make up the system under test.

May be in an introductory section to a troubleshooting work package (<***tswp***>) or be an element in a supporting technical description work package (<***techdescwp***> see F.8).

a. DTD fragment for <***funcdepend***>:

```
<!ELEMENT funcdepend - - (title, para*, figure)>
<!ATTLIST funcdepend
          %navlink;
          %refs;
          %secur;>
```

b. Attributes for <***funcdepend***>:

1. **%NAVLINK;** - Refer to common parameter entities for a complete description (see L.5.8).
2. **%REFS;** - Refer to common parameter entities for a complete description (see L.5.2).
3. **%SECUR;** - Refer to common parameter entities for a complete description (see L.5.3).

F.7.2.7 The element <***schematic***> is used for schematic drawings (<***figure***> seeL.4.4.1) included as supporting technical information during a troubleshooting procedure. May be in an introductory section to a troubleshooting work package (<***tswp***>) or be an element in a supporting technical description work package (<***techdescwp***> see F.8).

a. DTD fragment for <***schematic***>:

```
<!ELEMENT schematic - - (title, para*, figure+)>
<!ATTLIST schematic
          %navlink;
          %refs;
          %secur;>
```

b. Attributes for <***schematic***>:

1. **%NAVLINK;** - Refer to common parameter entities for a complete description (see L.5.8).
2. **%REFS;** - Refer to common parameter entities for a complete description (see L.5.2).
3. **%SECUR;** - Refer to common parameter entities for a complete description (see L.5.3).

F.7.2.8 The element <***comp-locator***> contains a series of figures (<***figure***> see L.4.4.1) followed by supporting text (a title (<***title***> see L.4.1.5.1) followed by at least one paragraph (<***para***> see L.4.1.5.3)) to locate components under test. Refer to the common elements section for a complete description of these elements.

a. DTD fragment for <***comp-locator***>:

```
<!ELEMENT comp-locator - - (figure+, title, para+) >
<!ATTLIST comp-locator
          %navlink;
          %refs;
          %secur;>
```

b. Attributes for <***comp-locator***>:

1. **%NAVLINK;** - Refer to common parameter entities for a complete description (see L.5.8).

2. **%REFS;** - Refer to common parameter entities for a complete description (see L.5.2).
3. **%SECUR;** - Refer to common parameter entities for a complete description (see L.5.3).

F.7.2.9 The harness index <***harness-indx***> is a special index of electrical (wiring) harnesses, needed due to the extensive interrelated circuitry. The element contains the harness index title (<***title***> seeL.4.1.5.1), followed by optional introductory paragraphs (<***para***> seeL.4.1.5.3), followed by a required harness index table (<***table***> seeL.4.2.1).

a. DTD fragment for <***harness-indx***>:

```
<!ELEMENT harness-indx  - - (title, para*, table) >
<!ATTLIST harness-indx
          %navlink;
          %refs;
          %secur;>
```

b. Attributes for <***harness-indx***>:

1. **%NAVLINK;** - Refer to common parameter entities for a complete description (see L.5.8).
2. **%REFS;** - Refer to common parameter entities for a complete description (see L.5.2).
3. **%SECUR;** - Refer to common parameter entities for a complete description (see L.5.3).

F.7.2.10 The element <***testdesc***> (see F.6.1) contains a narrative explanation of a test module within a troubleshooting work package.

F.7.2.11 The element <***flowtree***> (see F.10.8) contains a start-to-finish diagnostic flow tree, which consists of discrete procedural units with conditional navigation from unit to unit. This type of troubleshooting may be presented in diagrammatic format or narrative format.

F.7.2.12 The element <***tsproc***> (see F.10.7) contains a distinct unit of troubleshooting procedures (<***subproc***> see F.10.7.1) or multiple steps (<***step***> see F.10.3).

F.7.3 The element <***entry-point***> identifies an entry point into the troubleshooting procedures in a troubleshooting work package. An entry point may be a symptom <***known-malfunc***>, a system or subsystem/ assembly/subassembly <***functnl-flow***>, a failure during operational checks <***opertest***>, or an error code from automated or semi-automated testing including built-in diagnostics <***passfailck***>. A work package may have several entry points containing their own procedures, although most work packages will have only one entry point.

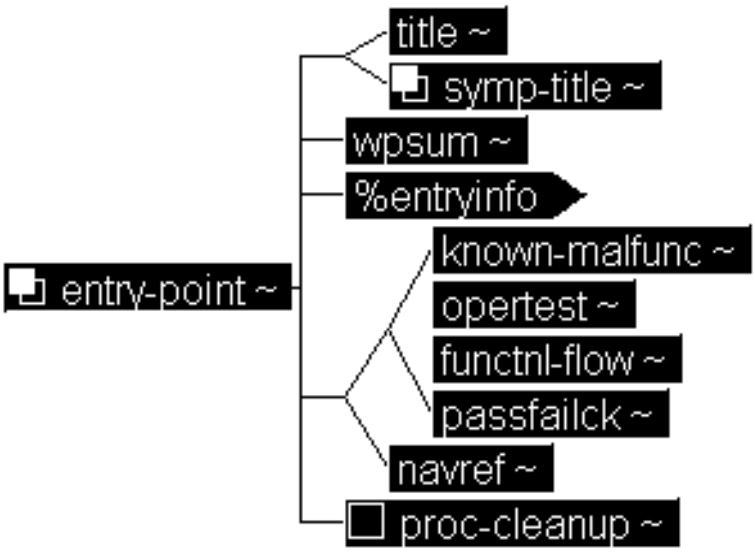

Figure 69 Entry-point DTD Hierarchy

a. DTD fragment for <***entry-point***>:

```
<!ELEMENT entry-point - - ((title | symp-title+), wpsum, %entryinfo;,
                           ((known-malfunc | opertest | functnl-flow |
                           passfailck) | navref), proc-cleanup?)>
<!ATTLIST entry-point
          type            (symptom | system |
                           errorcode | opcheck |
                           bit | follow-on)          #REQUIRED
          follow-on-id    CDATA                      #IMPLIED
          %navlink;
          %faultstate;
          schedmaint      IDREFS                      #IMPLIED
          applic          CDATA                       #IMPLIED>
```

b. Attributes for <***entry-point***>:

1. **TYPE** - Specifies the type of entry point.
   (a) “SYMPTOM” - The work package describes symptom diagnostic troubleshooting.
   (b) “SYSTEM” - The work package describes system or sub-system diagnostic troubleshooting.
   (c) “ERRORCODE” - The work package describes error code diagnostic troubleshooting.
   (d) “OPCHECK” - The work package describes operational checks troubleshooting.
   (e) “BIT” - The work package describes built-in diagnostic troubleshooting.
   (f) “FOLLOW-ON” - The work package describes follow-on troubleshooting procedures.
2. **FOLLOW-ON-ID** - If the attribute "TYPE" has a value of "FOLLOW-ON" then identification title is needed for the follow-on procedure.

3. **%NAVLINK;** - Refer to common parameter entities for a complete description (see L.5.8).
4. **%FAULTSTATE;** - Refer to common parameter entities for a complete description (see L.4.7.6).
5. **SCHEDMAINT** - References the identifier(s) of a scheduled maintenance check, service, or inspection procedure that resulted in finding the failure leading to this troubleshooting procedure.
6. **APPLIC** - Qualifies the entry point by defining to which configurations of the equipment it applies.

F.7.3.1 The element <***title***> (see L.4.1.5.1) is the entry-point title.

F.7.3.2 The element <***symp-title***> is the symptom title(s) and a reference to the troubleshooting procedure with the symptom.

a. DTD fragment for <***symp-title***>:

```
<!ELEMENT symp-title - - (%text;) >
<!ATTLIST symp-title
            symprefs  IDREFS  #IMPLIED
            %refs;
            %secur; >
```

b. Attributes for <***symp-title***>:

1. **SYMPREFS** - References the symptom location(s) in the entry-point procedure
2. **%REFS;** - Refer to common parameter entities for a complete description (see L.5.2).
3. **%SECUR;** - Refer to common parameter entities for a complete description (see L.5.3).

F.7.3.3 The element <***wpsum***>(see L.4.6.1) summarizes the procedures in the work package. Refer to the common elements section for a complete description.(see L.4.6.1)

F.7.3.4 The parameter entity ***%entryinfo;*** contains initial setup (<***wpinfo***>), prerequisites before entry-point procedure (<***initial-cond***>) and any alert notices (***%alert;***).

a. DTD fragment for ***%entryinfo;***:

```
<!ENTITY % entryinfo "(wpinfo, initial-cond, %alert;)">
```

F.7.3.4.1 The element <***wpinfo***>(see L.4.6.1) identifies the precondition requirements (tools, personnel, etc.) needed. Refer to the common elements section for a complete description.(see L.4.6.2)

F.7.3.4.2 The element <***initial-cond***> (see F.10.2.5) contains conditions that must be satisfied before beginning a troubleshooting procedure; initial conditions are in respect to the entry point rather than the work package.

F.7.3.4.3 The parameter entity ***%alert;*** (see L.3.2) contains any required warnings, cautions or notes before performing a entry-point procedure.

F.7.3.5 The element <***known-malfunc***> contains a type of troubleshooting based on known malfunctions; the element contains either a list of probable causes of the malfunctions <***faultpath***> or a series of tests related to the malfunctions <***faulttest***>.

a. DTD fragment for <***known-malfunc***>:

```
<!ELEMENT known-malfunc - - (faulttest+ | faultpath+)>
<!ATTLIST known-malfunc
          %refs;
          format  (tabular | narrative |
                   flow-diagram | seq-node |
                   filtered-node)                #IMPLIED
          %secur;>
```

b. Attributes for <***known-malfunc***>:

1. **%REFS;** - Refer to common parameter entities for a complete description (see L.5.2).
2. **FORMAT** - Specifies the presentation format.
   (a) "TABULAR" - Describes to the composition system to present the information in tabular format.
   (b) "NARRATIVE" - Describes to the composition system to present the information in textual format.
   (c) "FLOW-DIAGRAM" - Describes to the composition system to present the information is traversed in sequentially order and is in flow diagram (boxes) format.
   (d) "SEQ-NODE" - Describes to the composition system to present the information in tabular format (IETM use only).
   (e) "FILTERED-NODE" - Describes to the composition system to present the information is filtered to requested symptom in flow diagram (boxes) format (IETM use only).
3. **%SECUR;** - Refer to common parameter entities for a complete description (see L.5.3).

F.7.3.5.1 The element <***faulttest***> is used to diagnose and correct through a testing procedure using a standard fault testing troubleshooting table. The table lists suspected malfunctions, test(s) that will isolate a fault or diagnose the malfunction, and related corrective or other action(s). This element represents in tabular format the table element.

a. DTD fragment for <***faulttest***>:

```
<!ELEMENT faulttest - - (navref | ( sysname?, (malfunc, testing+)+))
                         +(graphic)>
<!ATTLIST faulttest
          %navlink
          %nodeloc;
          %faultstate;>
```

b. Attributes for <***faulttest***>:

1. **%NAVLINK;** - Refer to common parameter entities for a complete description (see L.5.8).
2. **%NODELOC;** - Refer to common parameter entities for a complete description (see L.5.9).
3. **%FAULTSTATE;** - Refer to common parameter entities for a complete description (see L.4.7.6).

F.7.3.5.1.1 The element <***navref***> (see L.4.7.10) is a reference to fault test.

F.7.3.5.1.2 The element <***sysname***> defines an optional system or equipment component to identify the fault test troubleshooting table. The element contains the parameter entity ***%text;***(see L.3.6).

a. DTD fragment for <***sysname***>:

```
<!ELEMENT sysname - - (%text;) +(navref)>
```

F.7.3.5.1.3 The element <***malfunc***> contains information about the detected malfunction to diagnosis. The element represents in a tabular format the beginning of a new row and first column.

a. DTD fragment for <***malfunc***>:

```
<!ELEMENT malfunc - - (condition*, (text | navref))>
<!ATTLIST malfunc
          label          (symptom | malfunction |
                          problem)                #REQUIRED
          %navlink;
          %faultstate;
          parent          %yesorno;               #IMPLIED
          child           %yesorno;               #IMPLIED
          partbase        IDREFS                  #IMPLIED
          theory          IDREFS                  #IMPLIED
          probability     NUMBER                  #IMPLIED
          cost            NUTOKEN                 #IMPLIED
          %refs;
          %secur;>
```

b. Attributes for <***malfunc***>:

1. **LABEL** - Defines the type of malfunction.
   (a) “SYMPTOM” - The suspect fault is a symptom.
   (b) “MALFUNCTION” - The suspect fault is a malfunction.
   (c) “PROBLEM” - The suspect fault is a problem.
2. **%NAVLINK;** - Refer to common parameter entities for a complete description (see L.5.8).
3. **%FAULTSTATE;** - Refer to common parameter entities for a complete description (see L.4.7.6).
4. **PARENT** - Specifies whether or not the malfunction will cause an apparent fault in the immediate parent assembly/component of an assembly/component/system.
5. **CHILD** - Specifies whether or not the malfunction will cause an apparent fault in the child components of an assembly/ component/system.
6. **PARTBASE** - References the identifier(s) of a part or parts related to the malfunction that occur in the supporting information chapter of the manual.
7. **THEORY** - References identifier(s) of portions of the theory of operation chapter elsewhere in the manual.
8. **PROBABILITY** - Specifies the probability that correcting this malfunction will return the equipment to ready status.

9. **COST** - The cost in time of pursuing the current malfunction.
10. **%REFS;** - Refer to common parameter entities for a complete description (see L.5.2).
11. **%SECUR;** - Refer to common parameter entities for a complete description (see L.5.3).

F.7.3.5.1.3.1 The element <***condition***> (see L.4.6.2.2.1.2) specifies an prerequisite conditions to be meet before continuing.

F.7.3.5.1.3.2 The element <***text***> (see L.3.6) contains the malfunction description.

F.7.3.5.1.3.3 The element <***navref***> (see L.4.7.10) is a navigation reference to malfunction procedures (IETM use only).

F.7.3.5.1.4 The element <***testing***> contains in a tabular format the second and third columns of the fault testing troubleshooting table. All contents of the element are placed in the table's second column with exception of <***action***>, occurring in the table's third column. There may be more than one test associated with a malfunction with each test aligned with its related <***action***>.

a. DTD fragment for <***testing***>:

```
<!ELEMENT testing - o (%alert;, ((step1 | (para | specpara)), action)+)>
<!ATTLIST testing
          %navlink;
          %faultstate;
          %refs;
          %secur;>
```

b. Attributes for <***testing***>:

1. **%NAVLINK;** - Refer to common parameter entities for a complete description (see L.5.8).
2. **%FAULTSTATE;** - Refer to common parameter entities for a complete description (see L.4.7.6).
3. **%REFS;** - Refer to common parameter entities for a complete description (see L.5.2).
4. **%SECUR;** - Refer to common parameter entities for a complete description (see L.5.3).

F.7.3.5.1.4.1 The parameter entity ***%alert;*** (see L.3.2) defines required alert notices.

F.7.3.5.1.4.2 The element <***step1***> (see L.4.1.8.2) is required steps in testing the malfunction.

F.7.3.5.1.4.3 The element <***para***> (see L.4.1.5.3) is the required step in testing the malfunction.

F.7.3.5.1.4.4 The element <***specpara***> (see L.4.1.1.1) is the required alert notices and step in testing the malfunction.

F.7.3.5.1.4.5 The element <***action***> (see F.10.6) is the corrective action to be taken related to malfunction testing. Its entire contents are placed in the third column of the fault testing troubleshooting table.

F.7.3.5.1.5 The element <***graphic***> (see L.4.4.1.2) is placed any where in the fault testing troubleshooting table to help describe the condition.

F.7.3.5.2 The element <***faultpath***> contains a method of troubleshooting based on known malfunctions in which a list of probable causes is given for each malfunction, accompanied by corrective or diagnostic actions. The information is presented in a standard probable cause troubleshooting table.

a. DTD fragment for <***faultpath***>:

```
<!ELEMENT faultpath - - (navref | (sysname?, (malfunc, suspect-fault+)+))
                        +(graphic)>
<!ATTLIST faultpath
          %navlink
          %nodeloc;
          %faultstate;>
```

b. Attributes for <***faulthpath***>:

1. **%NAVLINK;** - Refer to common parameter entities for a complete description (see L.5.8).
2. **%NODELOC;** - Refer to common parameter entities for a complete description (see L.5.9).
3. **%FAULTSTATE;** - Refer to common parameter entities for a complete description (see L.4.7.6).

c. Document instance fragment for <***faultpath***>:

```
<faultpath>
<malfunc><text>With generator power applied to the Shelter, MAIN POWER
circuit breaker is off, Phase Sequence light is out.</text></malfunc>
<suspect-fault><para>Generator Power</para>
<action><para>Check generator output power.  Adjust as required.
</para></action></suspect-fault>
<suspect-fault><para>Phase Sequence indicator</para>
<action><para>Check connections at generator and shelter.
</para></action></suspect-fault>
<suspect-fault><para>Secondary Filter (FL2)</para>
<action><para>Check secondary filter (FL2) voltage.</para></action></suspect-fault>
</faultpath>
```

d. Formatted document instance fragment for <***faultpath***>:

+6pt-6pt+6pt-6pt+6pt-6pt+6pt-6pt+6pt-6pt+6pt-6pt+6pt-6pt+6pt-6pt+6pt-6pt+6pt-6pt

MALFUNCTION	PROBABLE CAUSE	CORRECTIVE ACTION
1. With generator power applied to the Shelter, MAIN POWER circuit breaker is off, Phase Sequence light is out.	1. Generator Power 2. Phase Sequence indicator 3. Secondary Filter (FL2)	1. Check generator output power. Adjust as required. 2. Check connections at generator and shelter. 3. Check secondary filter (FL2) voltage.

Figure 70 Sample <faultpath>.

F.7.3.5.2.1 The element <***navref***> (see L.4.7.10) is reference to a known malfunction procedure.

F.7.3.5.2.2 The element <***sysname***> (see F.7.3.5.1.2) defines an optional system or equipment component to identify the probable cause troubleshooting table.

F.7.3.5.2.3 The element <***malfunc***> (see F.7.3.5.1.3) contains information about the detected malfunction to diagnosis. The element represents in a tabular format the beginning of a new row and first column.

F.7.3.5.2.4 The element <***suspect-fault***> contains a probable cause of a system malfunction. All contents of the element are placed in the table's second column with exception of <***action***>, occurring in the table's third column.

a. DTD fragment for <***suspect-fault***>:

```
<!ELEMENT suspect-fault - - (navref | suspect-fault | ((para | specpara)+,
                              action))>
<!ATTLIST suspect-fault
          %navlink
          %faultstate;
          %refs;
          %secur;>
```

b. Attributes for <***suspect-fault***>:

1. **%NAVLINK;** - Refer to common parameter entities for a complete description (see L.5.8).
2. **%FAULTSTATE;** - Refer to common parameter entities for a complete description (see L.4.7.6).
3. **%REFS;** - Refer to common parameter entities for a complete description (see L.5.2).
4. **%SECUR;** - Refer to common parameter entities for a complete description (see L.5.3).

F.7.3.5.2.4.1 The element <***navref***> (see L.4.7.10) is reference to probable cause symptom.

F.7.3.5.2.4.2 The element <***suspect-fault***> (see F.7.3.5.2.4) contains a probable cause of a subsystem malfunction.

F.7.3.5.2.4.3 The element <***para***> (see L.4.1.5.3) provides the narrative for the malfunction probable cause.

F.7.3.5.2.4.4 The element <***specpara***> (see L.4.1.1.1) provides necessary alert notices and the narrative for the malfunction probable cause.

F.7.3.5.2.4.5 The element <***action***> (see F.10.6) is the corrective action to be taken related to malfunction probable cause. Its entire contents are placed in the third column of the probable cause troubleshooting table.

F.7.3.5.2.5 The element <***graphic***> (see L.4.4.1.2) is placed any where in the fault testing troubleshooting table to help describe the condition.

F.7.3.6 The element <***opertest***> contains a method of troubleshooting that consists of operational tests, followed by normal indications or responses and corrective actions for when indications are out of range. This element represents in tabular format the table element when attribute "FORMAT" is set to "TABULAR".

a. DTD fragment for <***opertest***>:

```
<!ELEMENT opertest - o (testunit)+>
<!ATTLIST opertest
          %refs;
          format   (tabular | narrative |
                    flow-diagram | seq-node |
                    filtered-node)              #IMPLIED
          %secur;>
```

b. Attributes for <***opertest***>:

1. **%REFS;** - Refer to common parameter entities for a complete description (see L.5.2).
2. **FORMAT** - Specifies the format of operational test troubleshooting.
   (a) "TABULAR" - Describes to the composition system to present the information in tabular format.
   (b) "NARRATIVE" - Describes to the composition system to present the information in textual format.
   (c) "FLOW-DIAGRAM" - Describes to the composition system to present the information is traversed in sequentially order and is in flow diagram (boxes) format.
   (d) "SEQ-NODE" - Describes to the composition system to present the information in tabular format (IETM use only).
   (e) "FILTERED-NODE" - Describes to the composition system to present the information is filtered to requested symptom in flow diagram (boxes) format (IETM use only).
3. **%SECUR;** - Refer to common parameter entities for a complete description (see L.5.3).

F.7.3.6.1 The element <***testunit***> contains a test unit in an operational check method of presenting troubleshooting. It forms the row element in a standard operational test troubleshooting table.

a. DTD fragment for <***testunit***>:

```
<!ELEMENT testunit - - ((test, indication+) | navref) +(graphic)>
<!ATTLIST testunit
          %navlink
          %nodeloc;
          %faultstate;>
```

b. Attributes for <***testunit***>:

1. **%NAVLINK;** - Refer to common parameter entities for a complete description (see L.5.8).
2. **%NODELOC;** - Refer to common parameter entities for a complete description (see L.5.9).
3. **%FAULTSTATE;** - Refer to common parameter entities for a complete description (see L.4.7.6).

F.7.3.6.1.1 The element <***test***> (see F.10.8.2.1.1) contains testing procedure <***tsproc***> that forms one component of a troubleshooting procedure. The element is followed by a corrective action.

F.7.3.6.1.2 The element <***indication***> (see F.10.5) contains the normal or expected indication in response to the operational test. The element contains the second and third columns of a standard operational test troubleshooting table. All contents of the element, with the exception of <***action***>, are placed in the second column of the table. There may be more than one indication for each test.

F.7.3.6.1.3 The element <***navref***> (see L.4.7.10) is reference to test unit.

F.7.3.6.1.4 The element <***graphic***> (see L.4.4.1.2) is placed any where in the operational testing troubleshooting table to help describe the condition.

F.7.3.7 The element <***functnl-flow***> contains the marked-up text version of a flowtree (rather than the graphic file of the flow diagram). A flowtree consists of a progressive set of tests to isolate faults within a system,

one by one, generally in a top-down breakout. Each unit in the flowtree branches to other tests or corrective procedures depending on the test's outcome. Presented either in diagrammatic or narrative form.

a. DTD fragment for <***functnl-flow***>:

```
<!ELEMENT functnl-flow - o (flowtree, logic-graphic*, pathreftbl?)
                            +(helplink)>
<!ATTLIST functnl-flow
          %navlink;
          format   (tabular | narrative |
                    flow-diagram | seq-node |
                    filtered-node)              #IMPLIED
          %refs;
          %secur;>
```

b. Attributes for <***functnl-flow***>:

1. **%NAVLINK;** - Refer to common parameter entities for a complete description (see L.5.8).
2. **FORMAT** - Specifies the format of functional flow troubleshooting.
   (a) "TABULAR" - Describes to the composition system to present the information in tabular format.
   (b) "NARRATIVE" - Describes to the composition system to present the information in textual format.
   (c) "FLOW-DIAGRAM" - Describes to the composition system to present the information is traversed in sequentially order and is in flow diagram (boxes) format.
   (d) "SEQ-NODE" - Describes to the composition system to present the information in tabular format (IETM use only).
   (e) "FILTERED-NODE" - Describes to the composition system to present the information is filtered to requested symptom in flow diagram (boxes) format (IETM use only).
3. **%REFS;** - Refer to common parameter entities for a complete description (see L.5.2).
4. **%SECUR;** - Refer to common parameter entities for a complete description (see L.5.3).

F.7.3.7.1 The element <***flowtree***> (see F.10.8) contains a start-to-finish diagnostic flow tree, which consists of discrete procedural units with conditional navigation from unit to unit. This type of troubleshooting may be presented in diagrammatic format or narrative format

F.7.3.7.2 The element <***logic-graphic***> contains a branching logic tree in graphic format. It is used to accommodate application systems that cannot format a flowtree from marked-up text <***flowtree***>. The presence of this element can be ignored if the application uses the marked-up text for display. Each page of the logic-tree graphic represents a separate illustration (<***graphic***> see L.4.4.1.2).

a. DTD fragment for <***logic-graphic***>:

```
<!ELEMENT logic-graphic - o ((symptom | system), graphic+)>
<!ATTLIST logic-graphic
          fignum          %yesorno;       "0"
          %navlink;
```

```
          %nodeloc;
          %secur;>
```

b. Attributes for <***logic-graphic***>:

1. **FIGNUM** - Specifies whether or not the logic-graphic element is numbered; a non-zero value indicates that the graphic is numbered and is the default value when no attribute is entered.
2. **%NAVLINK;** - Refer to common parameter entities for a complete description (see L.5.8).
3. **%NODELOC;** - Refer to common parameter entities for a complete description (see L.5.9).
4. **%SECUR;** - Refer to common parameter entities for a complete description (see L.5.3).

F.7.3.7.2.1 The element <***symptom***> is the symptom description for the function flow graphic tree. The element contains either text (<***text***> see L.3.6) or a navigational reference (<***navref***> see L.4.7.10).

a. DTD fragment for <***symptom***>:

```
<!ELEMENT symptom - - (text | navref)>
<!ATTLIST symptom
          %navlink;
          %faultstate;
          %refs;
          %secur;>
```

b. Attributes for <***symptom***>:

1. **%NAVLINK;** - Refer to common parameter entities for a complete description (see L.5.8).
2. **%FAULTSTATE;** - Refer to common parameter entities for a complete description (see L.4.7.6).
3. **%REFS;** - Refer to common parameter entities for a complete description (see L.5.2).
4. **%SECUR;** - Refer to common parameter entities for a complete description (see L.5.3).

F.7.3.7.2.2 The element <***system***> is the description of the system or component being diagnosed. The element contains either text (<***text***> see L.3.6) or a navigational reference (<***navref***> see L.4.7.10).

a. DTD fragment for <***system***>:

```
<!ELEMENT system - - (text | navref)>
<!ATTLIST system
          %navlink;
          %faultstate;
          %refs;
          %secur;>
```

b. Attributes for <***system***>:

1. **%NAVLINK;** - Refer to common parameter entities for a complete description (see L.5.8).
2. **%FAULTSTATE;** - Refer to common parameter entities for a complete description (see L.4.7.6).
3. **%REFS;** - Refer to common parameter entities for a complete description (see L.5.2).

4. **%SECUR;** - Refer to common parameter entities for a complete description (see L.5.3).

F.7.3.7.3 The element <***pathreftbl***> is a tabular reference to each block in the function flow diagram. The reference table has the block identify number <***blockref***>, known information <***known-info***>, possible problems <***prob-cause***>, reason for query <***queryreason***>, and reference and/or additional information <***refinfo***>. This element contains a standard format path-linked reference table associated with a functional flowtree troubleshooting procedure.

a. DTD fragment for <***pathreftbl***>:

```
<!ELEMENT pathreftbl - - (helpinfo?, block-entry+)>
<!ATTLIST pathreftbl
          %navlink;
          %secur;>
```

b. Attributes for <***pathreftbl***>:

1. **%NAVLINK;** - Refer to common parameter entities for a complete description (see L.5.8).
2. **%SECUR;** - Refer to common parameter entities for a complete description (see L.5.3).

c. Document instance fragment for <***pathreftbl***>:

```
<pathreftbl>
<block-entry>
<blockref blockid="motor.block.1">
<known-info>
<faultitem>POWER INTERLOCKS OR</faultitem>
<faultitem>MOTOR POWER NOT AT DECA</faultitem> </known-info>
<prob-cause>
<faultitem>TDB</faultitem>
<faultitem>2W308</faultitem>
<faultitem>DECA</faultitem>
<faultitem>HATCH INTERLOCKS</faultitem> </prob-cause>
<queryreason>If TOW LOAD signal sent in error to TDB, power interlock to
DECA removed.  TOW LOAD may also be caused by faulty TURRET DOOR
INTERLOCK switch.</queryreason>
<refinfo>If TOW LOAD signal sent in error to TDB, power interlock to DECA
removed.  TOW LOAD may also be caused by faulty TURRET DOOR INTERLOCK
switch.</refinfo>
</block-entry>
</pathreftbl>
```

d. Formatted document instance fragment for <***pathreftbl***>:

+3pt-3pt+3pt-3pt+3pt-3pt

BLOCK	KNOWN INFO	POSSIBLE PROBLEMS	REASON FOR QUESTION	REFERENCE/INFO
1	POWER INTERLOCKS OR MOTOR POWER NOT AT DECA	TDB; 2W308; DECA; HATCH INTERLOCKS	Verify deck clearance switches adjusted properly.	If TOW LOAD signal sent in error to TDB, power interlock to DECA removed. TOW LOAD may also be caused by faulty TURRET DOOR INTERLOCK switch.

Figure 71 Sample <pathreftbl>.

F.7.3.7.3.1 The element ***<helpinfo>*** contains initial help information that could assist the user in using the troubleshooting procedure in concert with a path-linked reference table ***<pathreftbl>***. Such information might include a set of existing conditions and known information to qualify use of the procedure, over and above the identified entry point for the procedure.

a. DTD fragment for ***<helpinfo>***:

```
<!ELEMENT helpinfo - - (title, condition+, (%titldtext;)?)>
<!ATTLIST helpinfo
          %navlink;
          %secur;>
```

b. Attributes for ***<helpinfo>***:

1. **%NAVLINK;** - Refer to common parameter entities for a complete description (see L.5.8).
2. **%SECUR;** - Refer to common parameter entities for a complete description (see L.5.3).

F.7.3.7.3.1.1 The element ***<title>*** (see L.4.1.5.1) is help information name.

F.7.3.7.3.1.2 The element ***<condition>*** (see L.4.6.2.2.1.2) specifies an prerequisite conditions to be meet before continuing.

F.7.3.7.3.1.3 The parameter entity ***%titldtext;*** (see L.3.3) help information narrative.

F.7.3.7.3.2 The element ***<block-entry>*** contains the cell elements of a row in the path-linked reference table associated with a functional-flow troubleshooting procedures. The row and each cell in it pertains to one block in the troubleshooting flowtree.

a. DTD fragment for ***<block-entry>***:

```
<!ELEMENT block-entry - - (blockref, known-info, prob-cause, queryreason,
                           refinfo)+ +(helplink)>
<!ATTLIST block-entry
          %navlink;
          %nodeloc;
          %faultstate;
          %refs;
          %secur;>
```

b. Attributes for <***block-entry***>:

1. **%NAVLINK;** - Refer to common parameter entities for a complete description (see L.5.8).
2. **%NODELOC;** - Refer to common parameter entities for a complete description (see L.5.9).
3. **%FAULTSTATE;** - Refer to common parameter entities for a complete description (see L.4.7.6).
4. **%REFS;** - Refer to common parameter entities for a complete description (see L.5.2).
5. **%SECUR;** - Refer to common parameter entities for a complete description (see L.5.3).

F.7.3.7.3.2.1 The element <***blockref***> contains the function flow block reference to link the reference information. This element represents in tabular form a new row and first column in a path linked reference table.

a. DTD fragment for <***blockref***>:

```
<!ELEMENT blockref - o EMPTY>
<!ATTLIST blockref
          blockid         IDREF           #REQUIRED
          blocklabel      CDATA           #IMPLIED>
```

b. Attributes for <***blockref***>:

1. **BLOCKID** - References the unique identifier of the node containing the function flow block being referenced.
2. **BLOCKLABEL** - Supplies a literal block label.

F.7.3.7.3.2.2 The element <***known-info***> contains information already known at this point in a functional flow troubleshooting procedure; used to help the experienced user qualify the relevance of test procedures. This element in tabular form the second column in a path-linked reference table.

a. DTD fragment for <***known-info***>:

```
<!ELEMENT known-info - o (faultitem | faultref)+>
<!ATTLIST known-info
          %refs;
          %secur;>
```

b. Attributes for <***known-info***>:

1. **%REFS;** - Refer to common parameter entities for a complete description (see L.5.2).
2. **%SECUR;** - Refer to common parameter entities for a complete description (see L.5.3).

F.7.3.7.3.2.2.1 The element <***faultitem***> is the know fault information. The element contains the parameter entity ***%text;***(see L.3.6)

a. DTD fragment for <***faultitem***>:

```
<!ELEMENT faultitem - - (%text;)>
<!ATTLIST faultitem
          status  (OK | NOT-OK) #IMPLIED
```

```
%faultstate;
%refs;
%secur;>
```

b. Attributes for <***faultitem***>:

1. **STATUS** - The known fault status.
   (a) "OK" - Specifies whether the fault has been cleared and will generate OK after the fault item.
   (b) "OK" - Specifies whether the fault has been diagnosed as faulty and will generate NOTOK after the fault item..
2. **%FAULTSTATE;** - Refer to common parameter entities for a complete description (see L.4.7.6).
3. **%REFS;** - Refer to common parameter entities for a complete description (see L.5.2).
4. **%SECUR;** - Refer to common parameter entities for a complete description (see L.5.3).

F.7.3.7.3.2.2.2 The element <***faultref***> contains a fault invoked through a reference defined in troubleshooting work package <***fault-ids***>.

a. DTD fragment for <***faultref***>:

```
<!ELEMENT faultref - o EMPTY>
<!ATTLIST faultref
          refid   IDREF          #IMPLIED
          status  (OK | NOT-OK)  #IMPLIED>
```

b. Attributes for <***faultref***>:

1. **REFID** - References the identifier of a fault contained in the <***fault-ids***> element.
2. **STATUS** - The known fault status.
   (a) "OK" - Specifies whether the fault has been cleared and will generate OK after the fault item.
   (b) "NOT-OK" - Specifies whether the fault has been diagnosed as faulty and will generate NOTOK after the fault item..

F.7.3.7.3.2.3 The element <***prob-cause***> contains a probable cause for a malfunction or not-ready status. This element represents in tabular form the third column in the path-linked reference table.

a. DTD fragment for <***prob-cause***>:

```
<!ELEMENT prob-cause - o (faultitem | faultref)+>
<!ATTLIST prob-cause
          %refs;
          %secur;>
```

b. Attributes for <***prob-cause***>:

1. **%REFS;** - Refer to common parameter entities for a complete description (see L.5.2).
2. **%SECUR;** - Refer to common parameter entities for a complete description (see L.5.3).

F.7.3.7.3.2.3.1 The element <***faultitem***> (see F.7.3.7.3.2.2.1) is the know fault information.

F.7.3.7.3.2.3.2 The element <***faultref***> (see F.7.3.7.3.2.2.2) contains a fault invoked through a reference defined in troubleshooting work package <***fault-ids***>.

F.7.3.7.3.2.4 The element <***queryreason***> defines the reason(s) for questioning investigating a possible problem. The element contains the parameter entity ***%text;***(see L.3.6). This element represenets in tabular form the fourth column in the path-linked reference table.

a. DTD fragment for <***queryreason***>:

```
<!ELEMENT queryreason - o (%text;)>
<!ATTLIST queryreason
          %navlink;
          %refs;
          %secur;>
```

b. Attributes for <***queryreason***>:

1. **%NAVLINK;** - Refer to common parameter entities for a complete description (see L.5.8).
2. **%REFS;** - Refer to common parameter entities for a complete description (see L.5.2).
3. **%SECUR;** - Refer to common parameter entities for a complete description (see L.5.3).

F.7.3.7.3.2.5 The element <***refinfo***> contains helpful or reference information in respect to a block in a functional-flow troubleshooting procedure. It forms the fifth and last column in a path-linked reference table.

a. DTD fragment for <***refinfo***>:

```
<!ELEMENT refinfo - o (%text; | para+ | navref | faultitem)+>
<!ATTLIST refinfo
          %navlink;
          %refs;
          %secur;>
```

b. Attributes for <***refinfo***>:

1. **%NAVLINK;** - Refer to common parameter entities for a complete description (see L.5.8).
2. **%REFS;** - Refer to common parameter entities for a complete description (see L.5.2).
3. **%SECUR;** - Refer to common parameter entities for a complete description (see L.5.3).

F.7.3.7.3.2.5.1 The element ***%text;*** (see L.3.6) is the reference information text.

F.7.3.7.3.2.5.2 The element <***para***> (see L.4.1.5.3) is the reference information text.

F.7.3.7.3.2.5.3 The element <***navref***> (see L.4.7.10) is reference to a troubleshooting procedure or work package.

F.7.3.7.3.2.5.4 The element <***faultitem***> (see F.7.3.7.3.2.2.1) list other possible fault item(s).

F.7.3.7.3.2.6 The element <***helplink***> (see F.5.2) is link to help information to assist in diagnostics. This element may occur any where within the parent element.

F.7.3.8 The element <***passfailck***> contains a method of troubleshooting that lists a series of pass/fail checks on components, signals, or data. It is a common method for troubleshooting electronic and communication equipment; generally presented as a narrative list.

a. DTD fragment for <***passfailck***>:

```
<!ELEMENT passfailck - o (navref?, (symptom?, signal-item+)+) +(figure)>
<!ATTLIST passfailck
          %navlink;
          format     (tabular | narrative |
                      flow-diagram | seq-node |
                      filtered-node)            #IMPLIED
          %faultstate;
          %refs;
          %secur;>
```

b. Attributes for <***passfailck***>:

1. **%NAVLINK;** - Refer to common parameter entities for a complete description (see L.5.8).
2. **FORMAT** - Specifies the format of operational test troubleshooting.
   (a) "TABULAR" - Describes to the composition system to present the information in tabular format.
   (b) "NARRATIVE" - Describes to the composition system to present the information in textual format.
   (c) "FLOW-DIAGRAM" - Describes to the composition system to present the information is traversed in sequentially order and is in flow diagram (boxes) format.
   (d) "SEQ-NODE" - Describes to the composition system to present the information in tabular format (IETM use only).
   (e) "FILTERED-NODE" - Describes to the composition system to present the information is filtered to requested symptom in flow diagram (boxes) format (IETM use only).
3. **%FAULTSTATE;** - Refer to common parameter entities for a complete description (see L.4.7.6).
4. **%REFS;** - Refer to common parameter entities for a complete description (see L.5.2).
5. **%SECUR;** - Refer to common parameter entities for a complete description (see L.5.3).

c. Document instance fragment for <***passfailck***>:

```
<passfailck format="narrative">
<signal-item type="signal">
<name>DASEC STATUS WORD DC ANALOG OUTPUT BIT</name>
<dataitem><memloc>002150</memloc></dataitem>
<dataitem><memdata>15 (BINARY)</memdata></dataitem>
<dataitem><condition>(None)</condition></dataitem>
<dataitem><item-func>Indicates status of DC analog circuits.</item-func></
dataitem>
<ckremarks>From DASEC to FCC.</ckremarks>
<criteria type="pass-link"><text>If second digit displayed on HOD is 3 or 7</
text><navref navid="T00041–9–xxxx-xxx-xx-24nav" stepid="T00041–9–xxxx-xxx-xx-24"></crite-
ria>
</signal-item>
```

d. Formatted document instance fragment for <***passfailck***>:

+5pt-5pt+5pt-5pt+5pt-5pt

23. **SIGNAL NAME:** DASEC STATUS WORD DC ANALOG OUTPUT BIT

MEMORY LOCATION : 002150

MEMORY DATA BIT(S): 15 (BINARY)

CONDITION: (None)

REMARKS: From DASEC to FCC.

PASS: If second digit displayed on HOD is 3 or 7, go to step 24.

Figure 72 Sample <passfailck>.

F.7.3.8.1 The element <***navref***> (see L.4.7.10) is reference to preconditions to be performed.

F.7.3.8.2 The element <***symptom***> (see F.7.3.7.2.1) is the symptom being troubleshooted.

F.7.3.8.3 The element <***signal-item***> contains all information required to test a particular signal, component part, process, or data item during pass/fail operational check troubleshooting.

a. DTD fragment for <***signal-item***>:

```
<!ELEMENT signal-item - - (name, dataitem+, ckremarks?, criteria)
                          +(input)>
<!ATTLIST signal-item
            type           (part | signal |
                            process | other)   #IMPLIED
            %navlink;
            %nodeloc;
            %faultstate;
            %refs;
            %secur;>
```

b. Attributes for <***signal-item***>:

1. **TYPE** - Defines the type of signal being analyzed.
   (a) “PART” - Test applies to a component part.
   (b) “SIGNAL” - Test applies to a particular signal.
   (c) “PROCESS” - Test applies to a process.
   (d) “OTHER” - Test applies to a data item.
2. **%NAVLINK;** - Refer to common parameter entities for a complete description (see L.5.8).
3. **%NODELOC;** - Refer to common parameter entities for a complete description (see L.5.9).
4. **%FAULTSTATE;** - Refer to common parameter entities for a complete description (see L.4.7.6).
5. **%REFS;** - Refer to common parameter entities for a complete description (see L.5.2).
6. **%SECUR;** - Refer to common parameter entities for a complete description (see L.5.3).

F.7.3.8.3.1 The element <***name***> (see L.4.5.11) is the name of the signal item being analyzed.

F.7.3.8.3.2 The element <***dataitem***> contains the memory location (<***memloc***>), memory data bit(s) (<***memdata***>), condition (<***condition***> see L.4.6.2.2.1.2), signal item function (<***item-func***>), remarks/response (<***response***>), and other required data (<***otherdata***>).

a. DTD fragment for <***dataitem***>:

```
<?Pub Dtl>
<!ELEMENT dataitem - - (memloc | memdata | condition | item-func |
                        response | otherdata)>
<!ATTLIST dataitem
          %navlink;
          %refs;
          %secur;>
```

b. Attributes for <***dataitem***>:

1. **%NAVLINK;** - Refer to common parameter entities for a complete description (see L.5.8).
2. **%REFS;** - Refer to common parameter entities for a complete description (see L.5.2).
3. **%SECUR;** - Refer to common parameter entities for a complete description (see L.5.3).

F.7.3.8.3.2.1 The element <***memloc***> defines memory location address. The element contains the narrative text (<***text***> see L.3.6) or a navigational reference (<***navref***> see L.4.7.10) to the information.

a. DTD fragment for <***memloc***>, <***memdata***>, <***item-func***>, and <***response***>:

```
<!ELEMENT (memloc |
           memdata |
           item-func |
           response ) - - (text | navref)>
<!ATTLIST (memloc |
           memdata |
           item-func |
           response )
               %refs;
               %secur;>
```

b. Attributes for <***memloc***>:

1. **%REFS;** - Refer to common parameter entities for a complete description (see L.5.2).
2. **%SECUR;** - Refer to common parameter entities for a complete description (see L.5.3).

F.7.3.8.3.2.2 The element <***memdata***> defines the memory data bit register being examined.

a. DTD fragment for <***memdata***>: (see F.7.3.8.3.2.1 a.)

b. Attributes for <***memdata***>:(see F.7.3.8.3.2.1 b.)

F.7.3.8.3.2.3 The element <***condition***> (see L.4.6.2.2.1.2) specifies an prerequisite conditions to be meet before continuing.

F.7.3.8.3.2.4 The element <***item-func***> describes/identifies the item's function.

a. DTD fragment for <***item-func***>: (see F.7.3.8.3.2.1 a.)

b. Attributes for <***item-func***>:(see F.7.3.8.3.2.1 b.)

F.7.3.8.3.2.5 The element <***response***> is the return response from the memory location.

a. DTD fragment for <***response***>: (see F.7.3.8.3.2.1 a.)

b. Attributes for <***response***>:(see F.7.3.8.3.2.1 b.)

F.7.3.8.3.2.6 The element <***otherdata***> defines additional information specifically for the item function. The element contains the parameter entity (<***text***> see L.3.6) or a navigational reference (<***navref***> see L.4.7.10)..

a. DTD fragment for <***otherdata***>:

```
<!ELEMENT  otherdata - - (text | navref)>
<!ATTLIST  otherdata
             datalabel      CDATA     #IMPLIED>
```

b. Attributes for <***otherdata***>:

1. **DATALABEL** - Supplies a label for the miscellaneous data item; will be displayed in same format as other data item labels specified by the composition system).

F.7.3.8.3.3 The element <***ckremarks***> is any remarks concerning the signal item. The element contains a paragraph (<***para***> see L.4.1.5.3)

a. DTD fragment for <***ckremarks***>:

```
<!ELEMENT ckremarks - - (para+)>
<!ATTLIST ckremarks
            %navlink;
            %nodeloc;
            %faultstate;
            %refs;
            %secur;>
```

b. Attributes for <***ckremarks***>:

1. **%NAVLINK;** - Refer to common parameter entities for a complete description (see L.5.8).
2. **%NODELOC;** - Refer to common parameter entities for a complete description (see L.5.9).
3. **%FAULTSTATE;** - Refer to common parameter entities for a complete description (see L.4.7.6).
4. **%REFS;** - Refer to common parameter entities for a complete description (see L.5.2).
5. **%SECUR;** - Refer to common parameter entities for a complete description (see L.5.3).

F.7.3.8.3.4 The element <***criteria***> specify the criteria for a functioning signal item and next step in diagnosing the problem. The element contains narrative text (<***text***> see L.3.6), followed by an optional navigational reference (<***navref***> see L.4.7.10)

a. DTD fragment for <***criteria***>:

```
<!ELEMENT criteria - o (text, navref?)>
<!ATTLIST criteria
            type       (pass | fail |
                        pass-link | fail-rectif)     #IMPLIED
            %navlink;
            %faultstate;
            %refs;
            %secur;>
```

b. Attributes for <***criteria***>:

1. **TYPE** - Specifies the type of action resulting from this criteria element.
   (a) "PASS" - The identifies the content as a pass criteria.
   (b) "FAIL" - The identifies the content as a fail criteria.
   (c) "PASS-LINK" - The identifies the content as a pass criteria with link to next signal item to examine to correct the problem.
   (d) "FAIL-RECTIF" - The identifies the content as a fail criteria with information to rectify the problem.
2. **%NAVLINK;** - Refer to common parameter entities for a complete description (see L.5.8).
3. **%FAULTSTATE;** - Refer to common parameter entities for a complete description (see L.4.7.6).
4. **%REFS;** - Refer to common parameter entities for a complete description (see L.5.2).
5. **%SECUR;** - Refer to common parameter entities for a complete description (see L.5.3).

F.7.3.8.3.5 The element <***input***> (see F.10.3.10) contains an input requested at the point of this element's occurrence.

F.7.3.8.4 The element <***figure***> (see L.4.4.1) may occur any where to provide better diagnostics to the pass fail checks procedure.

F.7.3.9 The element <***navref***> (see L.4.7.10) is a reference to necessary troubleshooting procedures or work packages.

F.7.3.10 The element <***proc-cleanup***> contains procedures performed after taking corrective or other actions, after completing a troubleshooting procedure or subprocedure, at the end of procedures contained in an entry point, or at the end of a troubleshooting work package. Refer to the common elements section for a complete description.(see F.10.1)

F.7.4 The element <***bit-module***> is a built-in test module that describes test being performed <***testdesc***>, a functional flow tree <***flowtree***> to interpret the results from the BIT, and BIT fault report index <***faultreports***>.

a. DTD fragment for <***bit-module***>:

```
<!ELEMENT bit-module - - (title?, testdesc?, flowtree+, faultreports) >
<!ATTLIST bit-module
            %navlink;
            %faultstate;
```

```
schedmaint     IDREFS     #IMPLIED
applic         CDATA      #IMPLIED>
```

b. Attributes for <***bit-module***>:

1. **%NAVLINK;** - Refer to common parameter entities for a complete description (see L.5.8).
2. **%FAULTSTATE;** - Refer to common parameter entities for a complete description (see L.4.7.6).
3. **SCHEDMAINT** - References the identifier(s) of a scheduled maintenance check, service, or inspection that resulted in finding the failure leading to this troubleshooting procedure.
4. **APPLIC** - Used to qualify the applicability of the work package by equipment configuration.

F.7.4.1 The element <***title***> (see L.4.1.5.1) specifies the BIT test being performed.

F.7.4.2 The element <***testdesc***> (see F.6.1) contains a narrative explanation of a test module within a test module work package.

F.7.4.3 The element <***flowtree***> (see F.10.8) contains a start-to-finish diagnostic flow tree, which consists of discrete procedural units with conditional navigation from unit to unit.

F.7.4.4 The element <***faultreports***> (see F.6.4) is used for a troubleshooting reference table contained in a test module work package; these fault reports are generated by automated and/or built-in diagnostics.

F.7.5 The element <***proc-cleanup***> contains procedures performed after taking corrective or other actions, after completing a troubleshooting procedure or subprocedure, at the end of procedures contained in an entry point, or at the end of a troubleshooting work package. Refer to the common elements section for a complete description.(see F.10.1)

F.7.6 The element <***helplink***> (see F.5.2) contains a link to application help information or reference information and can be inserted anywhere in certain work packages. An example is "how to use" information or current faultstate. A helplink is used only when the document is presented as an ETM or IETM.

F.8 **Technical Information and Description Work Package <*techdescwp*>.** The technical information and description work package <***techdescwp***> is used for presenting technical description and other supporting information about a system or subsystem/assembly/component under test; it is presented in an independent section rather than as an optional introduction to a troubleshooting work package <***tswp***>. The <***techdescwp***> consist of the elements described below:

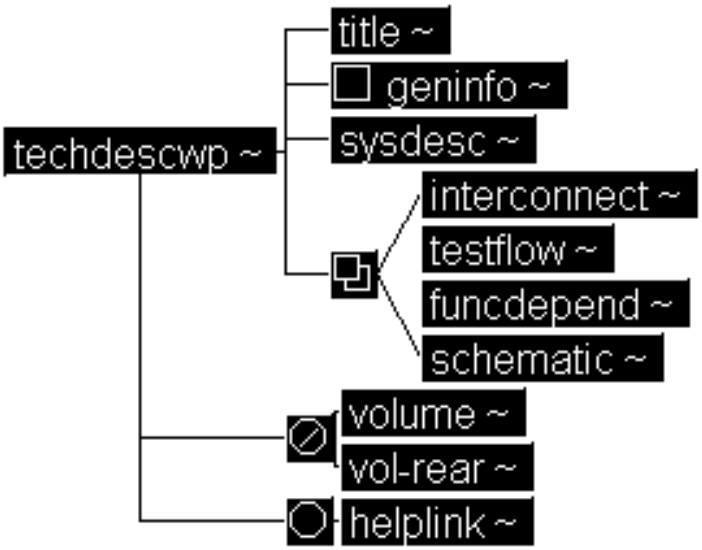

Figure 73 Technical Information and Description Work Package DTD Hierarchy

a. DTD fragment for <***techdescwp***>

```
<!ELEMENT techdescwp - - (title, geninfo?, sysdesc, (interconnect |
                          testflow |funcdepend | schematic)*) -(%vol.group;)
                          +(helplink)>
<!ATTLIST techdescwp
          level       (depot | operator |
                       gensup | dirsup |
                       unitlvl | inter |
                       avum-avim | tmlvls)   #REQUIRED
            wpno      ID                     #REQUIRED
            idmap     ENTITY                 #IMPLIED
            skilllvl  NUTOKEN                #IMPLIED
            applic    CDATA                  #IMPLIED
            %navlink;
            %wprsrc-vals;
            %tracking;
            %wpbodyatt;
            %secur;>
```

b. Attributes for <***techdescwp***>

1. **LEVEL** - The maintenance level of the work package.
   (a) “OPERATOR” - Applies to operator maintenance level.
   (b) “UNITLVL” - Applies to unit maintenance level.
   (c) “DIRSUP” - Applies to direct support (DS) maintenance level.
   (d) “GENSUP” - Applies to general support (GS) maintenance level.

(e) “INTER” - Applies to intermediate (DS/GS) maintenance level.

(f) “DEPOT” - Applies to depot maintenance level.

(g) “AVUM-AVIM” - Applies to aviation unit (AVUM) and intermediate (AVIM) maintenance level.

(h) “TMLVLS” - Applies to all maintenance levels.

2. **WPNO** - The unique number assigned to this work package by the original developer. This number remains the same when the work package is reused. The work package is referenced through an ID which is (#REQUIRED) and remains with the work package for the work package life. The FOSI generates the work package sequence number. Refer to MIL-STD-40051 Part 1 to obtain the work package number format.
3. **IDMAP** - The name of an entity containing a cross-reference table of IDs and IDREFs used in different versions of the work package identified by the attribute “WPNO”. This map is required when a work package is used in more than one technical with different sets of cross-referenced IDREFs. Use of this map is the responsibility of the application.
4. **SKILLLVL** - The military skill level required to perform any procedures contained in the work package.
5. **APPLIC** - Used to qualify the applicability of the work package by equipment configuration.
6. **%NAVLINK;** - Refer to common parameter entities for a complete description (see L.5.8).
7. **%WPRSRC-VALS;** - Refer to common parameter entities for a complete description (see L.5.5).
8. **%TRACKING;** - Refer to common parameter entities for a complete description (see L.5.6).
9. **%WPBODYATT;** - Refer to common parameter entities for a complete description (see L.5.4).
10. **%SECUR;** - Refer to common parameter entities for a complete description (see L.5.3).

F.8.1 The element <***title***>(see L.4.1.5.1) defines the work package title. (see L.4.1.5.1)

F.8.2 The element <***geninfo***> (see L.4.5.7) is introductory information to the work package.

F.8.3 The element <***sysdesc***> (see F.7.2.3) is used for description of the system/subsystem under test provided as supporting technical information; contained either as an optional introductory section of a troubleshooting work package or in a stand-alone technical description work package.

F.8.4 The element <***interconnect***> (see F.7.2.4) contains diagrams or other means of presenting the electrical and electronic connections between components of the system under test.

F.8.5 The element <***funcdepend***> (see F.7.2.6) contains diagrams (<***figure***> seeL.4.4.1) or other means (<***para***> seeL.4.1.5.3) of presenting the functional dependencies of components that make up the system under test.

F.8.6 The element <***schematic***> (see F.7.2.7) is used for schematic drawings (<***figure***> seeL.4.4.1) included as supporting technical information during a troubleshooting procedure.

F.8.7 The element <***helplink***> (see F.5.2) contains a link to application help information or reference information and can be inserted anywhere in certain work packages. An example is "how to use" information or current faultstate. A helplink is used only when the document is presented as an ETM or IETM.

F.9 **Maintenance Test Flight Troubleshooting Guide Work Package <*mtf-tswp*>.** The maintenance test flight (MTF) troubleshooting guide work package <***mtf-tswp***> is used for aviation equipment manuals. This

element is the only work package type in an MTF TIM). It contains a symptom reference index to troubleshooting work packages in the maintenance manual for the aircraft. The element <***mtf-tswp***> consist of the elements described below:

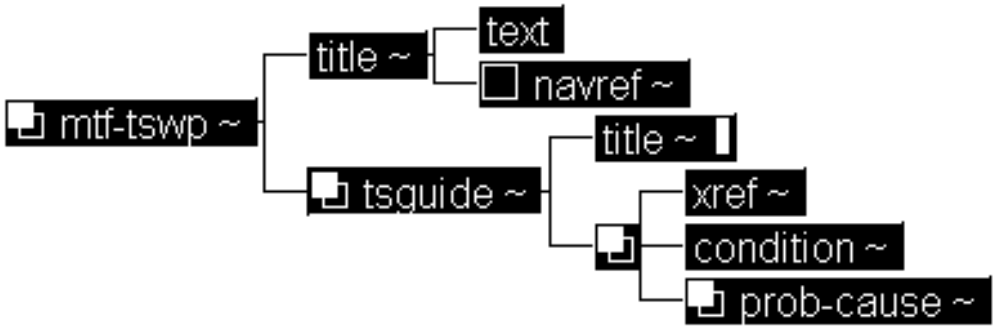

Figure 74 Maintenance Test Flight Troubleshooting Guide Work Package DTD Hierarchy

a. DTD fragment for <***mtf-tswp***>

```
<!ELEMENT mtf-tswp - - (title, tsguide+)>
<!ATTLIST mtf-tswp
           level        (depot | operator |
                         gensup | dirsup |
                         unitlvl | inter |
                         avum-avim | tmlvls)  #IMPLIED
            wpno        ID                    #REQUIRED
            idmap       ENTITY                #IMPLIED
            skilllvl    NUTOKEN               #IMPLIED
            applic      CDATA                 #IMPLIED
            %navlink;
            %wprsrc-vals;
            %tracking;
            %wpbodyatt;
            %secur;>
```

b. Attributes for <***mtf-tswp***>

1. **LEVEL** - The maintenance level of the work package.
   (a) “OPERATOR” - Applies to operator maintenance level.
   (b) “UNITLVL” - Applies to unit maintenance level.
   (c) “DIRSUP” - Applies to direct support (DS) maintenance level.
   (d) “GENSUP” - Applies to general support (GS) maintenance level.
   (e) “INTER” - Applies to intermediate (DS/GS) maintenance level.
   (f) “DEPOT” - Applies to depot maintenance level.
   (g) “AVUM-AVIM” - Applies to aviation unit (AVUM) and intermediate (AVIM) maintenance level.
   (h) “TMLVLS” - Applies to all maintenance levels.

2. **WPNO** - The unique number assigned to this work package by the original developer. This number remains the same when the work package is reused. The work package is referenced through an ID which is (#REQUIRED) and remains with the work package for the work package life. The FOSI generates the work package sequence number. Refer to MIL-STD-40051 Part 1 to obtain the work package number format.
3. **IDMAP** - The name of an entity containing a cross-reference table of IDs and IDREFs used in different versions of the work package identified by the attribute "WPNO". This map is required when a work package is used in more than one technical with different sets of cross-referenced IDREFs. Use of this map is the responsibility of the application.
4. **SKILLLVL** - The military skill level required to perform any procedures contained in the work package.
5. **APPLIC** - Used to qualify the applicability of the work package by equipment configuration.
6. **%NAVLINK;** - Refer to common parameter entities for a complete description (see L.5.8).
7. **%WPRSRC-VALS;** - Refer to common parameter entities for a complete description (see L.5.5).
8. **%TRACKING;** - Refer to common parameter entities for a complete description (see L.5.6).
9. **%WPBODYATT;** - Refer to common parameter entities for a complete description (see L.5.4).
10. **%SECUR;** - Refer to common parameter entities for a complete description (see L.5.3).

F.9.1 The element <***title***>(see L.4.1.5.1) defines the work package title. Refer to the common elements section for a complete description. (see L.4.1.5.1)

F.9.2 The element <***tsguide***> is a troubleshooting reference guide that forms a section within the troubleshooting chapter of an aircraft Maintenance Test Flight TM. The required attribute(s) of "GUIDENO" are used for the standard troubleshooting guide number as listed below:

a. DTD fragment for <***tsguide***>:

```
<?Pub Dtl>
<!ELEMENT tsguide - - (title, (xref, condition, prob-cause+)+)>
<!ATTLIST tsguide
            guideno    (A | B | CE | D |
                        E | F | G | H |
                        I | J | K | L |
                        M | N | O | P )       #REQUIRED
            %navlink;
            %nodeloc;
            %refs;
            %secur;>
```

b. Attributes for <***tsguide***>:

1. **GUIDENO** - The standard troubleshooting guide number as listed in the specification paragraph.
   (a) Troubleshooting Guide A - Starting
   (b) Troubleshooting Guide B - Instruments

(c) Troubleshooting Guide C - Electrical
(d) Troubleshooting Guide D - Caution Warning Advisory System
(e) Troubleshooting Guide E - Powerplants
(f) Troubleshooting Guide F - Rotors
(g) Troubleshooting Guide G - Hydraulics and IPAS
(h) Troubleshooting Guide H - Flight Controls
(i) Troubleshooting Guide I - Fuels
(j) Troubleshooting Guide J - Vibrations
(k) Troubleshooting Guide K - Communications and Navigation
(l) Troubleshooting Guide L - Stabilator and Controls System
(m) Troubleshooting Guide M - Sighting Systems
(n) Troubleshooting Guide N - Armament
(o) Troubleshooting Guide O - Mission Equipment

2. **%NAVLINK;** - Refer to common parameter entities for a complete description (see L.5.8).
3. **%NODELOC;** - Refer to common parameter entities for a complete description (see L.5.9).
4. **%REFS;** - Refer to common parameter entities for a complete description (see L.5.2).
5. **%SECUR;** - Refer to common parameter entities for a complete description (see L.5.3).

F.9.2.1 The element <***title***> is title for the MTF troubleshooting guide. Refer to the common elements section for a complete description. (see L.4.1.5.1)

F.9.2.2 The element <***xref***> (see L.4.1.3.8) is reference to the appendix.

F.9.2.3 The element <***condition***> (see L.4.6.2.2.1.2) specifies an prerequisite conditions to be meet before continuing.

F.9.2.4 The element <***prob-cause***> (see F.7.3.7.3.2.3) contains a probable cause for a malfunction or not-ready status. This element represents in tabular form the third column in the path-linked reference table.

F.10 **Common Troubleshooting Elements.** The elements described below are common troubleshooting procedures or section used throughout troubleshooting information chapter.

F.10.1 The element <***proc-cleanup***> contains procedures performed after taking corrective or other actions, after completing a troubleshooting procedure or subprocedure, at the end of procedures contained in an entry point, or at the end of a troubleshooting work package.

a. DTD fragment for <***proc-cleanup***>:

```
<!ELEMENT proc-cleanup - - (title?, %alert;, (proc+ | condition+))>
<!ATTLIST proc-cleanup
          %navlink;
          %nodeloc;
          %refs;
          %secur;>
```

b. Attributes for <***proc-cleanup***>:

1. **%NAVLINK;** - Refer to common parameter entities for a complete description (see L.5.8).
2. **%NODELOC;** - Refer to common parameter entities for a complete description (see L.5.9).
3. **%REFS;** - Refer to common parameter entities for a complete description (see L.5.2).
4. **%SECUR;** - Refer to common parameter entities for a complete description (see L.5.3).

F.10.1.1 The element <***title***> (see L.4.1.5.1) is the procedure cleanup title.

F.10.1.2 The parameter entity ***%alert;*** (see L.3.2) is required alert notices before performing the procedure cleanup.

F.10.1.3 The element <***proc***> (see L.4.1.8.1) is the cleanup instructions after completing the troubleshooting procedures.

F.10.1.4 The element <***condition***> (see L.4.6.2.2.1.2) specifies an prerequisite conditions to be meet before continuing.

F.10.2 The element <***rectif***> contains complete instructions on rectifying a fault condition, which may include a title, starting conditions, setup requirements, alert notices, procedures in paragraph or step form, and cleanup procedures.

a. DTD fragment for <***rectif***>:

```
<!ELEMENT rectif - - (title?, (navref | text | (%alert;, initial-cond?,
                     wpinfo?, (para | proc+), proc-cleanup?, navref?)))
                     +(graphic)>
<!ATTLIST rectif
          %navlink
          %nodeloc;
          %faultstate;
          %refs;
          %secur;>
```

b. Attributes for <***rectif***>:

1. **%NAVLINK;** - Refer to common parameter entities for a complete description (see L.5.8).
2. **%NODELOC;** - Refer to common parameter entities for a complete description (see L.5.9).
3. **%FAULTSTATE;** - Refer to common parameter entities for a complete description (see L.4.7.6).
4. **%REFS;** - Refer to common parameter entities for a complete description (see L.5.2).
5. **%SECUR;** - Refer to common parameter entities for a complete description (see L.5.3).

F.10.2.1 The element <***title***> (see L.4.1.5.1) is rectifying procedure title.

F.10.2.2 The element <***navref***> (see L.4.7.10) is reference to rectifying procedure.

F.10.2.3 The element <***text***> (see L.3.6) is the procedure information to rectify the problem.

F.10.2.4 The parameter entity ***%alert;*** (see L.3.2) is required alert notices before performing the procedure.

F.10.2.5 The element <***initial-cond***> contains conditions that must be satisfied before beginning a troubleshooting procedure; initial conditions are in respect to the entry point rather than the work package. Initial conditions may also apply before taking action to correct a fault.

a. DTD fragment for <***initial-cond***>:

```
<!ELEMENT initial-cond - - (condition+)>
<!ATTLIST initial-cond
          %refs;
          %secur;>
```

b. Attributes for <***initial-cond***>:

1. **%REFS;** - Refer to common parameter entities for a complete description (see L.5.2).
2. **%SECUR;** - Refer to common parameter entities for a complete description (see L.5.3).

F.10.2.5.1 The element <***condition***> (see L.4.6.2.2.1.2) specifies an prerequisite conditions to be meet before continuing.

F.10.2.6 The element <***wpinfo***>(see L.4.6.1) identifies the precondition requirements (tools, personnel, etc.) needed. Refer to the common elements section for a complete description.(see L.4.6.2) Refer to the common elements section for a complete description. (see L.4.6.2)

F.10.2.7 The element <***para***> (see L.4.1.5.3) is a single rectifying step to correct the problem.

F.10.2.8 The element <***proc***> (see L.4.1.8.1) is the rectify procedure with multiple steps.

F.10.2.9 The element <***proc-cleanup***> contains procedures performed after taking corrective or other actions, after completing a troubleshooting procedure or subprocedure, at the end of procedures contained in an entry point, or at the end of a troubleshooting work package. Refer to the common elements section for a complete description.(see F.10.1)

F.10.2.10 The element <***graphic***> (see L.4.4.1.2) is for including any where in the element illustrations to further explain the procedure.

F.10.3 The element <***step***> is used to identify primary-level steps in a troubleshooting procedure. A <***step***> element can include navigation references, queries, inputs, and other elements not contained in a <***step1***> primary-level step element.

a. DTD fragment for <***step***>:

```
<!ELEMENT step - - (title?, ((specpara | para)+ | loop | navref), step2*,
                    query?, outcome?)  +(graphic | input | rectif | testref)>
<!ATTLIST step
            %navlink;
            %faultstate;
            %nodeloc;
            %refs;
            %secur;>
```

b. Attributes for <***step***>:

1. **%NAVLINK;** - Refer to common parameter entities for a complete description (see L.5.8).
2. **%FAULTSTATE;** - Refer to common parameter entities for a complete description (see L.4.7.6).
3. **%NODELOC;** - Refer to common parameter entities for a complete description (see L.5.9).

4. **%REFS;** - Refer to common parameter entities for a complete description (see L.5.2).
5. **%SECUR;** - Refer to common parameter entities for a complete description (see L.5.3).

F.10.3.1 The element <***title***> (see L.4.1.5.1) is an optional step title.

F.10.3.2 The element <***specpara***> (see L.4.1.1.1) for the step narrative text, preceded with required alert notices.

F.10.3.3 The element <***para***> (see L.4.1.5.3) for the step narrative text.

F.10.3.4 The element <***loop***> contains a mechanism to repeat steps according to specified parameters; contains either a for loop (<***for***>) or a while loop (<***while***>).

a. DTD fragment for <***loop***>:

```
<!ELEMENT loop - - (for | while)>
<!ATTLIST loop
          %navlink;
          %refs;
          %secur;>
```

b. Attributes for <***loop***>:

1. **%NAVLINK;** - Refer to common parameter entities for a complete description (see L.5.8).
2. **%REFS;** - Refer to common parameter entities for a complete description (see L.5.2).
3. **%SECUR;** - Refer to common parameter entities for a complete description (see L.5.3).

F.10.3.4.1 The element <***for***> is a criteria for repeating the step a specified number of times until some end condition is reached, such as adjusting valve clearances for six valves. The element contains a navigational reference (<***navref***> see L.4.7.10).

a. DTD fragment for <***for***>:

```
<!ELEMENT for - - (navref)>
<!ATTLIST for
            %navlink;
            %refs;
            %secur;>
```

b. Attributes for <***for***>:

1. **%NAVLINK;** - Refer to common parameter entities for a complete description (see L.5.8).
2. **%REFS;** - Refer to common parameter entities for a complete description (see L.5.2).
3. **%SECUR;** - Refer to common parameter entities for a complete description (see L.5.3).

F.10.3.4.2 The element <***while***> is a criteria for repeating the step while some condition is in force, such as repeating a procedure while hydraulic pressure is under some threshold in order to achieve proper pressure. The element contains a navigational reference (<***navref***> see L.4.7.10).

a. DTD fragment for <***while***>:

```
<!ELEMENT while - - (navref)>
<!ATTLIST while
            %navlink;
            %refs;
            %secur;>
```

b. Attributes for <***while***>:

1. **%NAVLINK;** - Refer to common parameter entities for a complete description (see L.5.8).
2. **%REFS;** - Refer to common parameter entities for a complete description (see L.5.2).
3. **%SECUR;** - Refer to common parameter entities for a complete description (see L.5.3).

F.10.3.5 The element <***navref***> (see L.4.7.10) is a reference to a procedure.

F.10.3.6 The element <***step2***> (see L.4.1.8.3) is the second level step.

F.10.3.7 The element <***query***> contains all components of a query to the user during a troubleshooting procedure. Queries occur at the conclusion of a step, sub-procedure, or test and ask the user to evaluate the outcome of those elements. The evaluation conditions the user's next action. The contents of a query include a required question (or qualified question or reference to a question at another location in the document) and an optional answer or answers. The presentation format in influences whether the answer element is present; diagrammatic flowtrees do not contain answers, only links to other branches; narrative presentations contain explicit answer elements, which direct the user to other branch locations.

a. DTD fragment for <***query***>:

```
<!ELEMENT query - o ((question | navref), answer*)>
<!ATTLIST query
          %navlink;
          %nodeloc;
          %refs;
          %secur;>
```

b. Attributes for <***query***>:

1. **%NAVLINK;** - Refer to common parameter entities for a complete description (see L.5.8).
2. **%NODELOC;** - Refer to common parameter entities for a complete description (see L.5.9).
3. **%REFS;** - Refer to common parameter entities for a complete description (see L.5.2).
4. **%SECUR;** - Refer to common parameter entities for a complete description (see L.5.3).

F.10.3.7.1 The element <***question***> is the query question to be answered. The element contains a parameter entity***%text;*** is described in the common elements section. (see L.3.6)

a. DTD fragment for <***question***>:

```
<!ELEMENT question - - (%text;) >
```

```
<!ATTLIST question
          %refs;
          %secur;>
```

b. Attributes for <***question***>:

1. **%REFS;** - Refer to common parameter entities for a complete description (see L.5.2).
2. **%SECUR;** - Refer to common parameter entities for a complete description (see L.5.3).

F.10.3.7.2 The element <***navref***> (see L.4.7.10) is a reference to a question.

F.10.3.7.3 The element <***answer***> contains explicit actions, including navigation instructions, keyed to values such as "YES," "NOTTRUE," or "VALUE" contained in the "ANSWERVAL" attribute of the element. Used primarily in narrative presentations of functional-flow troubleshooting.

a. DTD fragment for <***answer***>:

```
<!ELEMENT answer - - (para | proc | step1 | outcome | end-statemnt |
                      locref | navref*)>
<!ATTLIST answer
          answerval   (yes | no |
                       pass | fail |
                       true | nottrue |
                       value | unantic)   #IMPLIED
          valueloc    NAMES               #IMPLIED
          valuetype   (%value;)           #IMPLIED
          inputvalue  IDREF               #IMPLIED
          value       CDATA               #IMPLIED
          %navlink;
          frame-label CDATA              #IMPLIED
          nodeapplic  CDATA              #IMPLIED
          startnode   %yesorno;          #IMPLIED
          nodeid      IDREF              #CURRENT
          %faultstate;
          %refs;
          %secur;>
```

b. Attributes for <***answer***>:

1. **ANSWERVAL** - Specifies the logical value associated with the current element. This value may be displayed in either paper or electronic display.
   (a)
   (b) “YES” - Applies to a positive answer and composition system will display ”YES".
   (c) “NO” - Applies to a negative answer and composition system will display ”NO".
   (d) “PASS” - Applies to a positive answer and composition system will display ”PASS".
   (e) “FAIL” - Applies to a negative answer and composition system will display ”FAIL".
   (f) “TRUE” - Applies to a positive answer and composition system will display ”TRUE".
   (g) “NOTTRUE” - Applies to a negative answer and composition system will display ”NOTRUE".

(h) “VALUE” - Applies to a response value from “VALUELOC” attribute and the composition system will display the from the “VALUETYPE” attribute.

(i) “UNANTIC” - Applies to an un anticapated response.

2. **VALUELOC** - Supplies location of value if contained in another element, such as ***<input>***
3. **VALUETYPE** - Specifies the type of value if attribute "ANSWERTYPE" is "VALUE."

(a) “BOOLEAN” - Applies to a boolean value from “VALUELOC” and the composition system will display either “TRUE” or “FALSE”.

(b) “FLOAT” - Applies to a floating point number from “VALUELOC” and the composition system will display the number.

(c) “INTEGER” - Applies to an integer number from “VALUELOC” and the composition system will display the number.

(d) “REAL” - Applies to a real number from “VALUELOC” and the composition system will display the number.

(e) “STRING” - Applies to a character string from “VALUELOC” and the composition system will display the string.

(f) “INPUT” - Applies to a inserted query value from “VALUELOC” and the composition system will display the inputted value.

(g) “NIL” - Applies to null value from “VALUELOC” and the composition system will display the “NIL”.

(h) “OUTCOME” - Applies to a query outcome from a test from “VALUELOC” and the composition system will display the value.

(i) “SEQUENCE” - Applies to an ordered sequence values from “VALUELOC” and the composition system will display the sequence value.

(j) “SET” - Applies to an unordered sequence values from “VALUELOC” and the composition system will display the set values.

4. **INPUTVALUE** - References the unique identifier of an element containing an external input value.
5. **VALUE** - Supplies an alphanumeric or numeric value if attribute "ANSWERVAL" IS "VALUE".
6. **%NAVLINK;** - Refer to common parameter entities for a complete description (see L.5.8).
7. **FRAME-LABEL** - Allows a label of an electronic display frame to be supplied.
8. **NODEAPPLIC** - Qualifies the applicability of the current node and contains identifications for the equipment configurations.
9. **STARTNODE** - Specifies whether the current element starts a new display node(frame). A non-zero value indicates it starts a new node.
10. **NODEID** - References the unique identifier of the node containing the current element.
11. **%FAULTSTATE;** - Refer to common parameter entities for a complete description (see L.4.7.6).
12. **%REFS;** - Refer to common parameter entities for a complete description (see L.5.2).
13. **%SECUR;** - Refer to common parameter entities for a complete description (see L.5.3).

F.10.3.7.3.1 The element ***<para>*** (see L.4.1.5.3) is the answer to the question.

F.10.3.7.3.2 The element <***proc***> (see L.4.1.8.1) is the procedural answer to the question.

F.10.3.7.3.3 The element <***step1***> (see L.4.1.8.2) is the first level step answer to the question.

F.10.3.7.3.4 The element <***outcome***> contains the results from automated or semi-automated testing in response to the operational test. The element contents are placed in the second column, outcome results. There may be more than one <***outcome***> for each test. Refer to the common elements section for a complete description.(see F.10.4)

F.10.3.7.3.5 The element <***end-statemnt***> (see F.10.8.3.5.3) is the concluding test after rectifying the problem.

F.10.3.7.3.6 The element <***locref***> is reference to either a function flow diagram block, troubleshooting page location, and troubleshooting procedure location. The element contains a navigational reference (<***navref***> see L.4.7.10).

a. DTD fragment for <***locref***>:

```
<!ELEMENT locref - o (navref)>
<!ATTLIST locref
          textblockid  IDREF      #IMPLIED
          pagelocid    IDREF      #IMPLIED
          tslocid      IDREF      #IMPLIED>
```

b. Attributes for <***locref***>:

1. **TEXTBLOCKID** - References the identifier of the parent branch.
2. **PAGELOCID** - References the identifier of a page location element <***pageloc***>.
3. **TSLOCID** - References the identifier of a troubleshooting location element <***tslocptr***> which can be used to resolve to a page jump reference.

F.10.3.7.3.7 The element <***navref***> (see L.4.7.10) is reference to the test procedure.

F.10.3.8 The element <***outcome***> contains the results from automated or semi-automated testing in response to the operational test. The element contents are placed in the second column, outcome results. There may be more than one <***outcome***> for each test. Refer to the common elements section for a complete description.(see F.10.4)

F.10.3.9 The element <***graphic***> (see L.4.4.1.2) is an illustration that may occur any where within the element.

F.10.3.10 The element <***input***> contains an input requested at the point of this element's occurrence; the input element may be inside a <***prompt***> element or during a troubleshooting procedure <***tsproc***>, <***subproc***>,or <***step***>. An input may be supplied by the user through the keyboard or mouse, inserted by built-in diagnostic systems, or returned from an external program.

a. DTD fragment for <***input***>:

```
<!ELEMENT input - - (extern-content, para?, navref)>
<!ATTLIST input
          prompt      CDATA                  #IMPLIED
          source      (user | BIT |
                      testset | expertsys |
                      process)              "user"
```

```
testunitid  CDATA                    #IMPLIED
processid   IDREF                    #IMPLIED
%nodeloc;
%faultstate;
%refs;>
```

b. Attributes for <***input***>:

1. **PROMPT** - Supplies the text of the prompt requesting user input.
2. **SOURCE** - Specifies the source of the current input.
   (a) "USER" - The source is from user input.
   (b) "BIT" - The source is from the built-in test equipment (BIT).
   (c) "TESTSET" - The source is from a connected test set.
   (d) "EXPERTSYS" - The source is from a connected expert diagnostic system.
   (e) "PROCESS" - The source is from program (process) the test procedure.
3. **TESTUNITID** - Specifies an identifying name for a test unit supplying the input.
4. **PROCESSID** - References the identifier of a program (process) supplying the input.
5. **%FAULTSTATE;** - Refer to common parameter entities for a complete description (see L.4.7.6).
6. **%REFS;** - Refer to common parameter entities for a complete description (see L.5.2).

F.10.3.10.1 The element <***extern-content***> is a alphanumeric or numeric data coming from an external source, such as user response to a prompt or value or signal coming from a program or built-in diagnostics. External content is contained by an <***input***> or <***outcome***> element only. The electronic application is responsible for recognizing and handling the data appropriately. The element contains the declared content CDATA, which means the content of this element is not parsed by the SGML parser.

a. DTD fragment for <***extern-content***>:

```
<!ELEMENT extern-content - - CDATA >
<!ATTLIST extern-content
          propertyid  IDREF      #REQUIRED
          valueloc    NAMES      #IMPLIED
          valuetype   (%value;)  #IMPLIED
          inputvalue  IDREF      #IMPLIED
          value       CDATA      #IMPLIED>
```

b. Attributes for <***extern-content***>:

1. **PROPERTYID** - References the identifier of a property established through a <***navref***> expression. The external content will affect this property by updating its value in a state table or supplying a value for use in an expression.
2. **VALUELOC** - Specifies the location of a value to be updated by the external content, such as a property in a state table.
3. **VALUETYPE** - Specifies the type of value being returned by the external content.
4. **INPUTVALUE** - References the identifier of an <***input***> element containing the external content element.

5. **VALUE** - Supplies an alphanumeric or numeric value.

F.10.3.10.2 The element <***para***> is a narrative text describing the input parameters. Refer to the common elements section for a complete description. (see L.4.1.5.3)

F.10.3.10.3 The element <***navref***> (see L.4.7.10) is reference to further information on the input responses.

F.10.4 The element <***outcome***> contains an outcome of a test procedure, especially from automated or semi-automated testing, an external program (process), or built-in diagnostics. The content may be inserted from an external source or contained as text in the manual.

a. DTD fragment for <***outcome***>:

```
<!ELEMENT outcome - - ((extern-content | (para | specpara))*, navref?)>
<!ATTLIST outcome
          prompt       CDATA                        #IMPLIED
          source      (user | BIT |
                      testset | expertsys |
                      process)                     "user"
          testunitid  CDATA                        #IMPLIED
          processid   IDREF                        #IMPLIED
          value-type  (value-query | true-nottrue |
                      pass-fail | num-range)       "true-nottrue"
          %nodeloc;
          %faultstate;
          %refs;>
```

b. Attributes for <***outcome***>:

1. **PROMPT** - Supplies the wording of a prompt requesting the user to supply an outcome, such as a message word.
2. **SOURCE** - Specifies the source of the outcome if from an external source.
   (a) “USER” - The source is from user input.
   (b) “BIT” - The source is from the built-in test equipment (BIT).
   (c) “TESTSET” - The source is from a connected test set.
   (d) “EXPERTSYS” - The source is from a connected expert diagnostic system.
   (e) “PROCESS” - The source is from program (process) the test procedure.
3. **TESTUNITID** - An identifying name of a test unit if attribute "SOURCE" is "TESTSET".
4. **PROCESSID** - References the identifier of a program (process) supplying the outcome.
5. **VALUE-TYPE** - Specifies the outcome’s type of value to establish evaluation criteria.
   (a) “VALUE-QUERY” - The expected value is established by the querying input.
   (b) “TRUE-NOTTRUE” - The expected value is either “TRUE” or “NOTTRUE”.
   (c) “PASS-FAIL” - The expected value is either “PASS” or “FAIL”.
   (d) “NUM-RANGE” - The expected value is from a number range.
6. **%NODELOC;** - Refer to common parameter entities for a complete description (see L.5.9).

7. **%FAULTSTATE;** - Refer to common parameter entities for a complete description (see L.4.7.6).
8. **%REFS;** - Refer to common parameter entities for a complete description (see L.5.2).

F.10.4.1 The element <***extern-content***> is a alphanumeric or numeric data coming from an external source, such as user response to a prompt or value or signal coming from a program or built-in diagnostics. External content is contained by an <***input***> or <***outcome***> element only. The electronic application is responsible for recognizing and handling the data appropriately. Refer to the common elements section for a complete description.-(see F.10.3.10.1)

F.10.4.2 The element <***para***> (see L.4.1.5.3) is the outcome narrative text.

F.10.4.3 The element <***specpara***> (see L.4.1.1.1) is the outcome narrative text with required preceding alert notices.

F.10.4.4 The element <***navref***> (see L.4.7.10) is reference to a next action.

F.10.5 The element <***indication***> contains the normal or expected indication in response to the operational test. There may be more than one indication for each test.

a. DTD fragment for <***indication***>:

```
<!ELEMENT indication - - (((para | specpara)+ | %list; | step1+), action?)
                          +(graphic)>
<!ATTLIST indication
          status      (normal | abnormal)  #IMPLIED
          %navlink;
          %faultstate;
          %refs;
          %secur;>
```

b. Attributes for <***indication***>:

1. **STATUS** - Specifies whether the current indication element is a normal or abnormal (out-of-range) indication.
2. **%NAVLINK;** - Refer to common parameter entities for a complete description (see L.5.8).
3. **%FAULTSTATE;** - Refer to common parameter entities for a complete description (see L.4.7.6).
4. **%REFS;** - Refer to common parameter entities for a complete description (see L.5.2).
5. **%SECUR;** - Refer to common parameter entities for a complete description (see L.5.3).

F.10.5.1 The element <***para***> (see L.4.1.5.3) is indication statement.

F.10.5.2 The element <***specpara***> (see L.4.1.1.1) is indication statement with required alert notices.

F.10.5.3 The parameter entity ***%list;*** (see L.3.1) is indication statement.

F.10.5.4 The element <***step1***> (see L.4.1.8.2) is indication procedural steps.

F.10.5.5 The element <***action***> is the corrective action to be taken related to a <***suspect-fault***> element. Refer to the common elements section for a complete description.(see F.10.6)

F.10.5.6 The element <***graphic***> (see L.4.4.1.2) is illustration that may occur any where within the element.

F.10.6 The element <***action***> is the corrective action to be taken related to a <***suspect-fault***> element.

a. DTD fragment for <***action***>:

```
<!ELEMENT action - - (navref | ( %alert;, (%conditions;)?, ((rectif | step+)+ |
                     (para | specpara)+), outcome?, proc-cleanup?, navref?))
                     +(graphic)>
<!ATTLIST action
          %navlink;
          %nodeloc;
          %faultstate;
          %refs;
          %secur;>
```

b. Attributes for <***action***>:

1. **%NAVLINK;** - Refer to common parameter entities for a complete description (see L.5.8).
2. **%NODELOC;** - Refer to common parameter entities for a complete description (see L.5.9).
3. **%FAULTSTATE;** - Refer to common parameter entities for a complete description (see L.4.7.6).
4. **%REFS;** - Refer to common parameter entities for a complete description (see L.5.2).
5. **%SECUR;** - Refer to common parameter entities for a complete description (see L.5.3).

F.10.6.1 The element <***navref***> (see L.4.7.10) is a reference to a corrective action.

F.10.6.2 The parameter entity ***%alert;*** (see L.3.2) is necessary alert notice before the corrective action is performed.

F.10.6.3 The parameter entity ***%conditions;*** (see L.3.10) is condition statement before taking corrective action.

F.10.6.4 The element <***rectif***> contains complete instructions on rectifying a fault condition, which may include a title, starting conditions, setup requirements, alerts, procedures in paragraph or step form, and cleanup procedures. Refer to the common elements section for a complete description.(see F.10.2)

F.10.6.5 The element <***step***> is used to identify primary-level steps in a troubleshooting procedure. A <***step***> element can include navigation references, queries, inputs, and other elements not contained in a <***step1***> primary-level step element. Refer to the common elements section for a complete description.(see F.10.3)

F.10.6.6 The element <***rectif***> contains complete instructions on rectifying a fault condition, which may include a title, starting conditions, setup requirements, alerts, procedures in paragraph or step form, and cleanup procedures. Refer to the common elements section for a complete description.(see F.10.2)

F.10.6.7 The element <***testref***> is a reference to a test procedure elsewhere in the document. The element contains a parameter entity***%text;*** which is described in paragraph L.3.6 of the common elements section.

a. DTD fragment for <***testref***>:

```
<!ELEMENT testref - o (%text;)>
<!ATTLIST testref
          %refs;
          %secur;>
```

b. Attributes for <***testref***>:

1. **%REFS;** - Refer to common parameter entities for a complete description (see L.5.2).
2. **%SECUR;** - Refer to common parameter entities for a complete description (see L.5.3).

F.10.6.8 The element <***para***> (see L.4.1.5.3) is the corrective action to be performed.

F.10.6.9 The element <***specpara***> (see L.4.1.1.1) is the corrective action to be performed with necessary alert notices.

F.10.6.10 The element <***outcome***> contains an outcome of a test procedure, especially from automated or semi-automated testing, an external program (process), or built-in diagnostics. The content may be inserted from an external source or contained as text in the manual. Refer to the common elements section for a complete description.(see F.10.4)

F.10.6.11 The element <***proc-cleanup***> contains procedures performed after taking corrective or other actions, after completing a troubleshooting procedure or subprocedure, at the end of procedures contained in an entry point, or at the end of a troubleshooting work package. Refer to the common elements section for a complete description.(see F.10.1)

F.10.6.12 The element <***graphic***> (see L.4.4.1.2) is an illustration may occur any where in the element.

F.10.7 The element <***tsproc***> contains a distinct unit of troubleshooting procedures (<***subproc***>) or multiple troubleshooting procedural steps (<***step***> see F.10.3). Following procedures the element may contain an optional results from automated or semi-automated testing (<***outcome***> see F.10.4), followed by an optional procedures performed after taking corrective or other actions (<***proc-cleanup***> see F.10.1). The element contains prior to the procedures an optional procedure title (<***title***> see L.4.1.5.1) and any alert statements (***%alert;*** see L.3.2). An input requested at the point of element (<***input***> see F.10.3.10) may occur any where within the element.

a. DTD fragment for <***tsproc***>:

```
<!ELEMENT tsproc - o (title?, %alert;, (subproc | step+)+, outcome?,
                      proc-cleanup?) +(input)>
<!ATTLIST tsproc
          %navlink;
          %nodeloc;
          %faultstate;
          id              ID              #IMPLIED
          contentref      IDREFS          #CONREF
          %secur;>
```

b. Attributes for <***tsproc***>:

1. **%NAVLINK;** - Refer to common parameter entities for a complete description (see L.5.8).
2. **%NODELOC;** - Refer to common parameter entities for a complete description (see L.5.9).
3. **%FAULTSTATE;** - Refer to common parameter entities for a complete description (see L.4.7.6).
4. **ID** - Specifies the unique identifier of the current end block.
5. **CONTENTREF** - References the identifier(s) of content elsewhere in the document to be used as content of the current test module.
6. **%SECUR;** - Refer to common parameter entities for a complete description (see L.5.3).

F.10.7.1 The element <***subproc***> forms a logical unit within a larger procedure; it contains a series of steps or reference to a series of steps elsewhere in the document. Used primarily for repeated actions that are candidates for referencing. The element contains either a navigational reference to a troubleshooting procedure or an optional procedure title (<***title***> see L.4.1.5.1) followed by alert statements (***%alert;*** see L.3.2) with at least one operational test step (<***step***> see F.10.3) and/or reference to a test procedure (<***testref***> see F.10.6.7). After completing the testing an optional user query (<***query***>), followed by optional results from automatedor semi-automated testing (<***outcome***> see F.10.4), followed by an optional procedures performed after taking corrective or other actions (<***proc-cleanup***> see F.10.1). An input requested at the point of element (<***input***> see F.10.3.10) may occur any where within the element.

a. DTD fragment for <***subproc***>:

```
<!ELEMENT subproc - - (navref | (title?, %alert;, (step | testref)+, query?,
                        outcome?, proc-cleanup?, navref?)) +(input)>
<!ATTLIST subproc
          %navlink;
          %nodeloc;
          %faultstate;
          %refs;
          %secur;>
```

b. Attributes for <***subproc***>:

1. **%NAVLINK;** - Refer to common parameter entities for a complete description (see L.5.8).
2. **%NODELOC;** - Refer to common parameter entities for a complete description (see L.5.9).
3. **%FAULTSTATE;** - Refer to common parameter entities for a complete description (see L.4.7.6).
4. **%REFS;** - Refer to common parameter entities for a complete description (see L.5.2).
5. **%SECUR;** - Refer to common parameter entities for a complete description (see L.5.3).

F.10.7.1.1 The element <***query***> (see F.10.3.7) contains all components of a query to the user during a troubleshooting procedure. Queries occur at the conclusion of a step, sub-procedure, or test and ask the user to evaluate the outcome of those elements. The evaluation conditions the user's next action. The contents of a query include a required question (or qualified question or reference to a question at another location in the document) and an optional answer or answers. The presentation format in influences whether the answer element is present; diagrammatic flowtrees do not contain answers, only links to other branches; narrative presentations contain explicit answer elements, which direct the user to other branch locations.

F.10.7.2 The element <***disconnect***> contains a test set disconnection procedure contained in a test module. The element <***disconnect***> contains a title (<***title***> see L.4.1.5.1) followed by general introductory information (<***geninfo***> see L.4.5.7), necessary alert notice (***%alert;*** see L.3.2) performed before disconnection procedure, and multiple disconnection procedures (<***proc***> see L.4.1.8.1).

a. DTD fragment for <***disconnect***>:

```
<!ELEMENT disconnect - - (title, geninfo?, %alert;, proc+)>
<!ATTLIST disconnect
          %navlink;
```

```
          %nodeloc;
          %refs;
          %secur;>
```

b. Attributes for <***disconnect***>:

1. **%NAVLINK;** - Refer to common parameter entities for a complete description (see L.5.8).
2. **%NODELOC;** - Refer to common parameter entities for a complete description (see L.5.9).
3. **%REFS;** - Refer to common parameter entities for a complete description (see L.5.2).
4. **%SECUR;** - Refer to common parameter entities for a complete description (see L.5.3).

F.10.8 The element <***flowtree***> contains a start-to-finish diagnostic flow tree, which consists of discrete procedural units with conditional navigation from unit to unit. This type of troubleshooting may be presented in diagrammatic format or narrative format. The element contains necessary alert notices block (<***alertblock***>), a tree origin (<***origin***>) and a series of branches (<***branch***>).

a. DTD fragment for <***flowtree***>:

```
<!ELEMENT flowtree - - (alertblock*, origin, branch+) +(table | figure)>
<!ATTLIST flowtree
          %navlink;
          %secur;>
```

b. Attributes for <***flowtree***>:

1. **%NAVLINK;** - Refer to common parameter entities for a complete description (see L.5.8).
2. **%SECUR;** - Refer to common parameter entities for a complete description (see L.5.3).

F.10.8.1 The element <***alertblock***> is initial alert notices before preceding to the diagnostic flow blocks. The element contains an optional title (<***title***> see L.4.1.5.1) followed by alert notices (***%alert;*** see L.3.2). The element may contain an optional navigation reference (<***navref***> see L.4.7.10) and necessary illustrations (<***graphic***> see L.4.4.1.2) any where in the element.

a. DTD fragment for <***alertblock***>:

```
<!ELEMENT alertblock - o (title?, %alert;, navref? ) +(graphic)>
<!ATTLIST alertblock
          branchid        IDREFS          #IMPLIED
          %navlink;
          %nodeloc;
          id              ID              #IMPLIED
          contentref      IDREFS          #CONREF
          %secur;>
```

b. Attributes for <***alertblock***>:

1. **BRANCHID** - References the unique identifier(s) of the flowtree branch in which the alert-block occurs.
2. **%NAVLINK;** - Refer to common parameter entities for a complete description (see L.5.8).
3. **%NODELOC;** - Refer to common parameter entities for a complete description (see L.5.9).

4. **ID** - Specifies the unique identifier of the current test module instance.
5. **CONTENTREFS** - References the identifier(s) of content elsewhere in the document to be used as content of the current test module. When a value is entered, the content of the element becomes EMPTY and the referenced information is used.
6. **%SECUR;** - Refer to common parameter entities for a complete description (see L.5.3).

F.10.8.2 The element <***origin***> contains the point of origin for troubleshooting procedures in a particular flowtree. The element may be preceded by an alert messages, but not by branches containing tests or procedures. The origin begins the primary "GO" path in most flowtrees.

a. DTD fragment for <***origin***>:

```
<!ELEMENT origin - - (testblock)>
<!ATTLIST origin
          origin          ID              #REQUIRED
          branchto        IDREFS          #REQUIRED
          branchlabel     CDATA           #REQUIRED
          branchreflabel  CDATA           #IMPLIED>
```

b. Attributes for <***origin***>:

1. **ORIGIN** - Specifies unique identifier of the path beginning at the origin.
2. **BRANCHTO** - References identifier(s) of branch or branches to which the user should proceed, which may depend on the outcome of any test or procedure at point of origin.
3. **BRANCHLABEL** - Supplies an explicit reference to a branch.
4. **BRANCHREFLABEL** - Supplies an explicit reference to a branch.

F.10.8.2.1 The element <***testblock***> contains a test procedure, steps, test options, or other text and is one of the block types contained in a branch of a flowtree. A test block commonly ends with a query that determines the branching of the flowtree; however, the query is optional and not needed if the path does not branch at that point in the flowtree.

a. DTD fragment for <***testblock***>:

```
<!ELEMENT testblock - o ((test, query, navref?) | query | (testoption,
                        action*) | ((%alert; | para | step | action)+,
                        navref?)) +(graphic)>
<!ATTLIST testblock
          branchid        IDREFS          #IMPLIED
          %navlink;
          %faultstate;
          %nodeloc;
          id              ID              #IMPLIED
          contentref      IDREFS          #CONREF
          %secur;>
```

b. Attributes for <***testblock***>:

1. **BRANCHID** - References the unique identifier(s) of the flowtree branch in which the test block occurs.

2. **%NAVLINK;** - Refer to common parameter entities for a complete description (see L.5.8).
3. **%FAULTSTATE;** - Refer to common parameter entities for a complete description (see L.4.7.6).
4. **%NODELOC;** - Refer to common parameter entities for a complete description (see L.5.9).
5. **ID** - Specifies the unique identifier of the current test module instance.
6. **CONTENTREF** - References the identifier(s) of content elsewhere in the document to be used as content of the current test module.
7. **%SECUR;** - Refer to common parameter entities for a complete description (see L.5.3).

F.10.8.2.1.1 The element <***test***> contains testing procedure <***tsproc***> that forms one component of a troubleshooting procedure, especially in functional flow procedures. A test is generally followed by a query on its outcome, a listing of the normal indication or response, a reference <***navref***> to another test or location, or a corrective action. The element contains an optional title (<***title***> see L.4.1.5.1), any alert statements (***%alert;*** see L.3.2) followed by either a troubleshooting procedures (<***tsproc***> see F.10.7) or reference to another test or location (<***navref***> see L.4.7.10).

a. DTD fragment for <***test***>:

```
<!ELEMENT test - o (title?, %alert;, (tsproc | navref))>
<!ATTLIST test
          %navlink
          %faultstate;>
```

b. Attributes for <***test***>:

1. **%NAVLINK;** - Refer to common parameter entities for a complete description (see L.5.8).
2. **%FAULTSTATE;** - Refer to common parameter entities for a complete description (see L.4.7.6).

F.10.8.2.1.2 The element <***query***> (see F.10.3.7) contains all components of a query to the user during a troubleshooting procedure. Queries occur at the conclusion of a step, sub-procedure, or test and ask the user to evaluate the outcome of those elements. The evaluation conditions the user's next action. The contents of a query include a required question (or qualified question or reference to a question at another location in the document) and an optional answer or answers. The presentation format in influences whether the answer element is present; diagrammatic flowtrees do not contain answers, only links to other branches; narrative presentations contain explicit answer elements, which direct the user to other branch locations.

F.10.8.2.1.3 The element <***testoption***> contains a navigational reference (<***navref***> see L.4.7.10) that holds a choice of procedure dependent on some filtering criteria, such as whether the equipment has connections for a test set installed.

a. DTD fragment for <***testoption***>:

```
<!ELEMENT testoption - - (navref)>
```

F.10.8.2.1.4 The element <***action***> is the corrective action to be taken. The information is contained in the standard troubleshooting index table in the third column. Refer to the common elements section for a complete description.(see F.10.6)

F.10.8.2.1.5 The parameter entity ***%alert;*** (see L.3.2) is necessary alert notices before the procedure is performed.

F.10.8.2.1.6 The element <***para***> (see L.4.1.5.3) is a single step to perform for the test.

F.10.8.2.1.7 The element <***step***> specifies the operation test step. The step information is used in the first column in operation test table. Refer to the common elements section for a complete description.(see F.10.3)

F.10.8.2.1.8 The element <***graphic***> is an illustration to be included any where in the element. Refer to the common elements section for a complete description. (see L.4.4.1.2)

F.10.8.3 The element <***branch***> contains a unit separated graphically or numerically from other units and arranged in a path. The element contains an optional paper branch reference (<***branchref***>), optional alert statement block (<***alertblock***> see F.10.8.1), optional page location for paper (<***pageloc***>) followed by a branch. A branch contains either a test procedure (<***testblock***>), a termination of a path in the flowtree (<***endblock***>), or one of several types of references (<***locref***> or <***navref***> see L.4.7.10).

a. DTD fragment for <***branch***>:

```
<!ELEMENT branch - o (branchref?, alertblock?, pageloc?, (locref |
                      navref | testblock | endblock))>
<!ATTLIST branch
          type            (yes | no |
                           pass | fail |
                           true | nottrue |
                           value | unantic)     #REQUIRED
          branch          ID                    #REQUIRED
          branchlabel     CDATA                 #REQUIRED
          branchreflabel  CDATA                 #IMPLIED
          contentref      IDREFS                #CONREF
          new-path        %yesorno;             #IMPLIED
          valueloc        NAMES                 #IMPLIED
          valuetype       (boolean | string |
                           sequence | set |
                           real | integer |
                           float | nil |
                           input | outcome)     #IMPLIED
          inputvalue      IDREF                 #IMPLIED
          value           CDATA                 #IMPLIED
          branchfrom      IDREFS                #REQUIRED
          branchto        IDREFS                #REQUIRED>
```

b. Attributes for <***branch***>:

1. **TYPE** - Specifies the type of branch logic.current element. This value may be displayed in either paper or electronic display.

   (a)

   (b) “YES” - Applies to a positive answer and composition system will display ”YES".

   (c) “NO” - Applies to a negative answer and composition system will display ”NO".

(d) “PASS” - Applies to a positive answer and composition system will display ”PASS".

(e) “FAIL” - Applies to a negative answer and composition system will display ”FAIL".

(f) “TRUE” - Applies to a positive answer and composition system will display ”TRUE".

(g) “NOTTRUE” - Applies to a negative answer and composition system will display ”NOTRUE".

(h) “VALUE” - Applies to a response value from “VALUELOC” attribute and the composition system will display the from the “VALUETYPE” attribute.

(i) “UNANTIC” - Applies to a unanticipated result.

2. **BRANCH** - Specifies the unique identifier of the current branch.
3. **BRANCHLABEL** - Supplies an explicit numeric or alphanumeric identifier of the origin.
4. **BRANCHREFLABEL** - Supplies an explicit reference to a branch.
5. **CONTENTREFS** - References the identifier(s) of content elsewhere in the document to be used as content of the current test module.
6. **NEW-PATH** - Specifies whether the current branch is the origin of a new path or continues the same path; a non-zero value indicates a new path.
7. **VALUELOC** - Supplies location of value if contained in another element, such as **<*input*>**.
8. **VALUETYPE** - Specifies the type of value if attribute "TYPE" is "VALUE."

   (a) “BOOLEAN” - Applies to a boolean value from “VALUELOC” and the composition system will display either “TRUE” or “FALSE”.

   (b) “STRING” - Applies to a character string from “VALUELOC” and the composition system will display the string.

   (c) “SEQUENCE” - Applies to an ordered sequence values from “VALUELOC” and the composition system will display the sequence value.

   (d) “SET” - Applies to an unordered sequence values from “VALUELOC” and the composition system will display the set values.

   (e) “REAL” - Applies to a real number from “VALUELOC” and the composition system will display the number.

   (f) “INTEGER” - Applies to an integer number from “VALUELOC” and the composition system will display the number.

   (g) “FLOAT” - Applies to a floating point number from “VALUELOC” and the composition system will display the number.

   (h) “NIL” - Applies to null value from “VALUELOC” and the composition system will display the “NIL”.

   (i) “INPUT” - Applies to a inserted query value from “VALUELOC” and the composition system will display the inputted value.

   (j) “OUTCOME” - Applies to a query outcome from a test from “VALUELOC” and the composition system will display the value.

9. **INPUTVALUE** - References the unique identifier of an element containing an external input value if the attribute "TYPE" is "VALUE."
10. **VALUE** - Supplies an alphanumeric or numeric value if attribute "TYPE" is "VALUE."
11. **BRANCHFROM** - References the identifiers of the branch or branches from which the current branch has descended.

12. **BRANCHTO** - References identifier(s) of branch or branches to which the user should proceed, which may depend on the outcome of any test or procedure at point of origin.

F.10.8.3.1 The element <***branchref***> contains a branch reference that refers users to a branch forced to another page by composition boundaries and uses the attribute to reference the branch identifier. Relevant only in paper presentations. The element is EMPTY and all pertinent information is entered through its attributes.

a. DTD fragment for <***branchref***>:

```
<!ELEMENT branchref - o EMPTY >
<!ATTLIST branchref
          textblockid      IDREF      #REQUIRED>
```

b. Attributes for <***branchref***>:

1. **TEXTBLOCKID** - References the identifier of the branch forced to another page.

F.10.8.3.2 The element <***pageloc***> (see L.4.1.3.5) used to establish a page location that can be invoked as a cross-reference and resolved to the instantiated page number. Used when a text location cannot be referenced to an element, such as a table, task, or work package.

F.10.8.3.3 The element <***locref***> (see F.10.3.7.3.6) is a location reference used in a flowtree diagram to allow the composition system to insert a page jump location. The element is ignored in electronic presentations (in which navigation is controlled by the "BRANCHTO" attributes of the parent branch).

F.10.8.3.4 The element <***testblock***> (see F.10.8.2.1) contains a test procedure, steps, test options, or other text and is one of the block types contained in a branch of a flowtree. A test block commonly ends with a query that determines the branching of the flowtree; however, the query is optional and not needed if the path does not branch at that point in the flowtree.

F.10.8.3.5 The element <***endblock***> is the concluding path within a functional flow troubleshooting procedure. The element contains either a test procedure (<***test***>), narrative paragraph(s) (<***para***> see L.4.1.5.3) with any alert statements (<***specpara***> see L.4.1.1.1), procedure step(s) (<***step***> see F.10.3), or rectification statement (<***rectif***>) followed by either an end block statement (<***end-statemnt***>) or test reference (<***testref***> see F.10.6.7)

a. DTD fragment for <***endblock***>:

```
<!ELEMENT endblock - o ((test | (specpara | para)+ | step+ | rectif),
                        (end-statemnt | testref))>
<!ATTLIST endblock
          branchid        IDREFS          #IMPLIED
          %navlink;
          %faultstate;
          %nodeloc;
          id              ID              #IMPLIED
          contentref      IDREFS          #CONREF
          %secur;>
```

b. Attributes for <***endblock***>:

1. **BRANCHID** - References the unique identifier(s) of the flowtree branch in which the alert-block occurs.

2. **%NAVLINK;** - Refer to common parameter entities for a complete description (see L.5.8).
3. **%FAULTSTATE;** - Refer to common parameter entities for a complete description (see L.4.7.6).
4. **%NODELOC;** - Refer to common parameter entities for a complete description (see L.5.9).
5. **ID** - Specifies the unique identifier of the current end block.
6. **CONTENTREF** - References the identifier(s) of content elsewhere in the document to be used as content of the current test module.
7. **%SECUR;** - Refer to common parameter entities for a complete description (see L.5.3).

F.10.8.3.5.1 The element <***test***> (see F.10.8.2.1.1) is a testing procedure that is generally followed by a query on its outcome, a listing of the normal indication or response, a reference to another test or location, or a corrective action.

F.10.8.3.5.2 The element <***rectif***> contains complete instructions on rectifying a fault condition, which may include a title, starting conditions, setup requirements, alert notices, procedures in paragraph or step form, and cleanup procedures. Refer to the common elements section for a complete description.(see F.10.2)

F.10.8.3.5.3 The element <***end-statement***> is the end of a flowtree path. The attribute "END-TYPE" indicates the end statement as whether the system/symptom under test has no faults, needs a particular corrective action, has failed and must be reported to another maintenance level, or links to another troubleshooting procedure for further diagnosis. The element contains a paragraph (<***para***> see L.4.1.5.3), followed by an optional navigational reference (<***navref***> see L.4.7.10).

a. DTD fragment for <***end-statement***>:

```
<!ELEMENT end-statemnt - - (para, navref?) >
<!ATTLIST end-statemnt
          end-type  (end-pass | repair-verify |
                     end-fail | link-out)      #IMPLIED
          %refs;
          %secur;>
```

b. Attributes for <***end-statement***>:

1. **END-TYPE** - Indicates the type of end statement.
   (a) **END-PASS** - Indicates the end statement is a system/symptom under test has no faults.
   (b) **REPAIR-VERIFY** - Indicates the end statement that needs a particular corrective action.
   (c) **END-FAIL** - Indicates the end statement that has failed and must be reported to another maintenance level.
   (d) **LINK-OUT** - Indicates the end statement is a link(s) to another troubleshooting procedure for further diagnosis.
2. **%REFS;** - Refer to common parameter entities for a complete description (see L.5.2).
3. **%SECUR;** - Refer to common parameter entities for a complete description (see L.5.3).

Supporting Information

G.1 **Scope.** The following paragraphs give a description and use of the elements used in the MIL-STD-2361(SC)Supporting Information chapter DTD.

G.2 **Applicable documents.** Refer to paragraph 2.

G.3 **Supporting Information Chapter <*sim*>.** Supporting information must be prepared as work packages and contained in a supporting information chapter <***sim***>. The chapter contains an optional IETM login procedure (<***login***> see L.4.7.9), an optional title page (<***titlepg***> see L.4.5.16), either a standard supporting information chapter ***%stdsim;*** or an aviation supporting information chapter <***avsim***>.

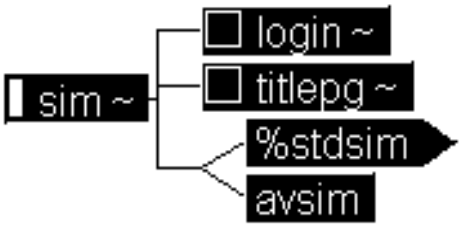

Figure 75 Supporting Information Chapter DTD Hierarchy

a. DTD fragment for <***sim***>:

```
<!ELEMENT sim - - (login?, titlepg?, (%stdsim; | avsim))>
<!ATTLIST sim
          tmno         CDATA                #CURRENT
          tmlabel      CDATA                #IMPLIED
          eic          CDATA                #CURRENT
          imno         CDATA                #REQUIRED
          imctrlabel   NUMBER               #REQUIRED
          imlevel      (depot | operator |
                        gensup | dirsup |
                        unitlvl | inter |
                        avum-avim | tmlvls)  #REQUIRED
          revno        NUMBER                #REQUIRED
          chngno       NUMBER                #REQUIRED
          date         CDATA                 #IMPLIED
          pubno        CDATA                 #IMPLIED
          %imrsrc-vals;
          %refs;
          %secur;>
```

b. Attributes for <***sim***> :

1. **TMNO** - The number of the current TM. The prefix TM must be included in the attribute value. The first time the attribute is referenced for the element it is treated as required, thereafter that it will assume the current attribute value.
2. **TMLABEL** - The number of the TM of which this information chapter (IM) was a part when originally created; this number remains the same throughout all versions of the IM.

3. **EIC** - The end-item code of the equipment covered in the TM of which this IM is a part. The first time the attribute is referenced for the element it is treated as required, thereafter that it will assume the current attribute value.
4. **IMNO** - reserved for a unique identifying number of the information chapter, when and if such a numbering system is instituted; analogous to the attribute "WPNO" at the work package level.
5. **IMCTRLABEL** - a label giving the sequence number of the information chapter within this version of the TM; allows an individual IM to be composed with full numbering of pages and components.
6. **IMLEVEL** - the maintenance level of the information chapter.
   (a) “OPERATOR” - Applies to operator maintenance level.
   (b) “UNITLVL” - Applies to unit maintenance level.
   (c) “DIRSUP” - Applies to direct support (DS) maintenance level.
   (d) “GENSUP” - Applies to general support (GS) maintenance level.
   (e) “INTER” - Applies to intermediate (DS/GS) maintenance level.
   (f) “DEPOT” - Applies to depot maintenance level.
   (g) “AVUM-AVIM” - Applies to aviation unit (AVUM) and intermediate (AVIM) maintenance level.
   (h) “TMLVLS” - Applies to all maintenance levels.
7. **REVNO** - the overall revision number for the information chapter.
8. **CHNGNO** - the overall change number for the information chapter.
9. **DATE** - The date of the current version of the chapter.
10. **PUBNO** - Specifies the technical manual publication number.
11. **%IMRSRC-VALS;** - Refer to common parameter entities for a complete description (see L.5.7).
12. **%REFS;** - Refer to common parameter entities for a complete description (see L.5.2).
13. **%SECUR;** - Refer to common parameter entities for a complete description (see L.5.3).

G.3.1 **Standard Supporting Information Chapter *%stdsim;*.** The standard supporting information chapter contains twenty two work packages which are defined as follows:

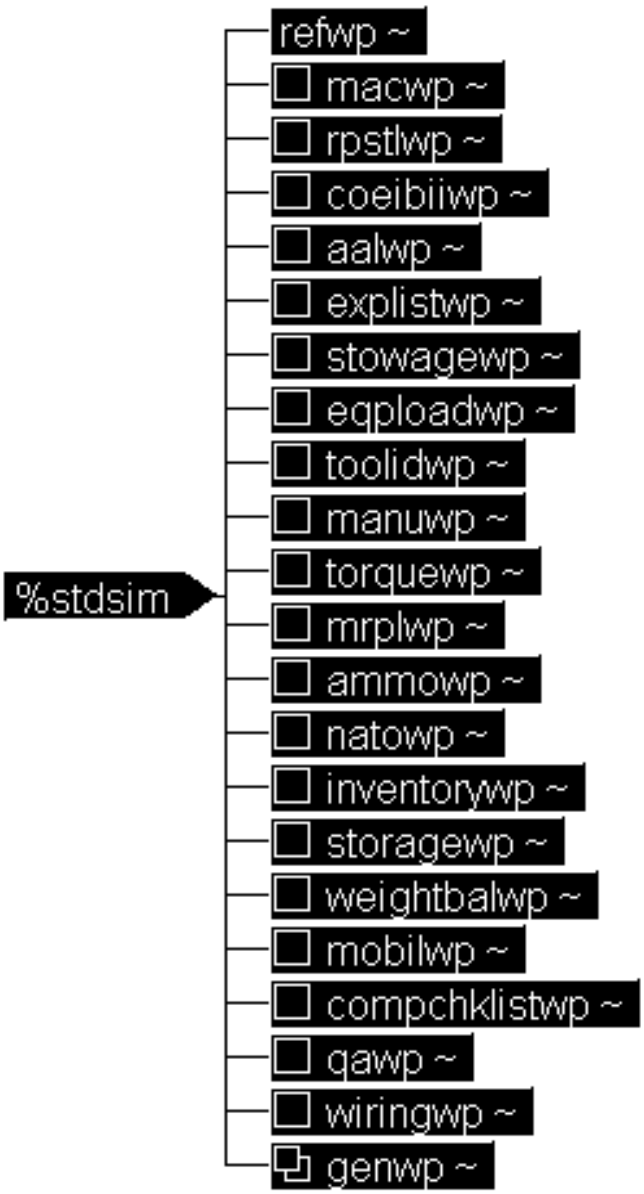

Figure 76 Standard Supporting Information Chapters DTD Hierarchy

a. DTD fragment for ***%stdsim;***:

```
<!ENTITY % stdsim "(refwp, macwp?, rpstlwp?, coeibiiwp?, aalwp?,
                    explistwp, stowagewp?,eqploadwp?, toolidwp?,
                    manuwp?, torquewp?, mrplwp?, ammowp?, natowp?,
                    inventorywp?, storagewp?, weightbalwp?, mobilwp?,
                    compchklistwp?, qawp?, wiringwp?, genwp*)">
```

G.3.1.1 **References Work Package <*refwp*>.** The references work package <***refwp***> lists all publications referenced in the TM and required by the user to operate and/or maintain the equipment. The <***refwp***> contains the following elements:

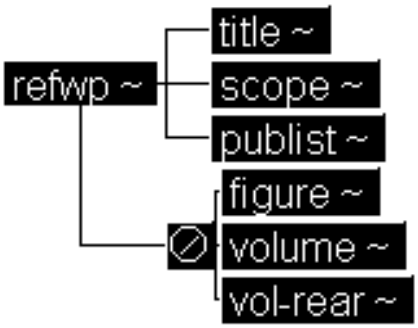

Figure 77 References Work Package DTD Hierarchy

a. DTD fragment for <***refwp***>:

```
<!ELEMENT refwp - - (title, scope, publist) -(figure | %vol.group;)>
<!ATTLIST refwp
          wpno            ID       #REQUIRED
          %navlink;
          %tracking;
          %wpbodyatt;
          %secur;>
```

b. Attributes for <***refwp***>:

1. **WPNO** - The unique number assigned to this work package by the original developer. This number remains the same when the work package is reused. The work package is referenced through an ID which is (#REQUIRED) and remains with the work package for the work package life. The FOSI generates the work package sequence number. Refer to MIL-STD-40051 Part 1 to obtain the work package number format.
2. **%NAVLINK;** - Refer to common parameter entities for a complete description (see L.5.8).
3. **%TRACKING;** - Refer to common parameter entities for a complete description (see L.5.6).
4. **%WPBODYATT;** - Refer to common parameter entities for a complete description (see L.5.4).
5. **%SECUR;** - Refer to common parameter entities for a complete description (see L.5.3).

c. SGML document instance fragment for <***refwp***>:

```
<refwp wpno="S00001-9-2350-294">
<title><text>REFERENCES</text></title>
<scope>
<para>This appendix lists all forms, field manuals, and technical
manuals referenced in this manual for M2A3 and M3A3.</para>
```

</scope>
<publist>
*<title><text>*PUBLICATION INDEX*</text></title>*
*<para>*The following index should be consulted often. Check this index for the latest changes or revisions to references given in this appendix. Check this index for new publications relating to material covered in this technical manual.*</para>*
*<name><text>*Consolidated Index of Army Publications and Blank Forms*</text></name>*
*<pubident>*DA Pamphlet 25-30*</pubident>*
*<name><text>*The Army Maintenance Management System (TAMMS)*</text></name>*
*<pubident>*DA Pamphlet 738-750*</pubident>*
*<title><text>*FORMS*</text></title>*
*<name><text>*Equipment Inspection and Maintenance Work Sheet*</text></name>*
*<pubident>*DA Form 2404*</pubident>*
*<name><text>*Organizational Control Record for Equipment*</text></name>*
*<pubident>*DA Form 2401*</pubident>*
*<name><text>*Quality Deficiency Report, Category 2*</text></name>*
*<pubident>*SF 368*</pubident>*
*<name><text>*Recommended Changes to Equipment Technical Publications*</text></name>*
*<pubident>*DA Form 2028-2*</pubident>*
*<title><text>*FIELD MANUALS*</text></title>*
*<name><text>*Basic Cold Weather Manual*</text></name>*
*<pubident>*FM 31-70*</pubident>*
*<name><text>*Bradley Gunnery*</text></name>*
*<pubident>*FM 23--1*</pubident>*
*<name><text>*Desert Operations*</text></name>*
*<pubident>*FM 90--3*</pubident>*
*<name><text>*First Aid for Soldiers*</text></name>*
*<pubident>*FM 21-11*</pubident>*
*<name><text>*How to Fight Mountain Operations*</text></name>*
*<pubident>*FM 90-6*</pubident>*
*<name><text>*Launcher and Cartridge 84--mm, M136 (AT4), Heat*</text></name>*
*<pubident>*FM 23--25*</pubident>*
*<name><text>*Manual for Tracked Combat Vehicle Driver*</text></name>*
*<pubident>*FM 21-306*</pubident>*
*<name><text>*Northern Operations*</text></name>*
*<pubident>*FM 31-71*</pubident>*
*<name><text>*Operation and Maintenance of Ordnance Materiel: In Cold Weather (0° to -65°F)*</text></name>*
*<pubident>*FM 9-207*</pubident>*
*<name><text>*Vehicle Recovery Operations*</text></name>*
*<pubident>*FM 20-22*</pubident>*

<*title*><*text*>TECHNICAL MANUALS</*text*></*title*>
<*name*><*text*>Ammunition and Explosives Standards</*text*></*name*>
<*pubident*>TM 9-1300-206</*pubident*>
<*name*><*text*>Destruction of Conventional Ammunition and Improved Conventional Munitions to Prevent Enemy Use (Excluding Toxic and Incapacitating Chemical Agents)(For Combat Units) </*text*></*name*>
<*pubident*>TM 750-244-5-1</*pubident*>
<*name*><*text*>General Ammunition</*text*></*name*>
<*pubident*>TM 9-1300-200</*pubident*>
<*name*><*text*>Hand Receipt Covering Contents of Components of End Item (COEI), Basic Issue Items (BII), and Additional Authorization List (AAL) for Fighting Vehicle, Infantry, M2A3 (2350--01--436--0005) and Fighting Vehicle, Cavalry, M3A3 (2350--01--436--0007) </*text*></*name*>
<*pubident*>TM 9-2350-294-10-HR</*pubident*>
<*name*><*text*>Operations and Maintenance Manual Satellite Signals Navigation Set AN/PSN-11</*text*></*name*>
<*pubident*>TM 1-5825-291-13</*pubident*>
<*name*><*text*>Operators Manual for SINCGARS Ground Combat Net Radio</*text*></*name*>
<*pubident*>TM 11-5820-890-10-1</*pubident*>
<*name*><*text*>Operator’s, Organizational, Direct support and General Support Maintenance Manual: Launcher and Cartridge, 84mm: M136 (AT4)</*text*></*name*>
<*pubident*>TM 9-1340-886-14</*pubident*>
<*name*><*text*>Operator’s, Organizational, Direct Support and General Support Maintenance, Repair Parts and Special Tools List Manual: Launcher, Practice, Subcaliber Ammunition: M287 (AT4) with Cartridge, 9mm: Practice M939 (AT4)</*text*></*name*>
<*pubident*>TM 9-6920-886-14&P</*pubident*>
<*name*><*text*>Operator and Organizational Maintenance Manual, Javelin</*text*></*name*>
<*pubident*>ARMY DEP 9-1425-687-12</*pubident*>
<*name*><*text*>Operator’s and Unit Maintenance Manual: Alarm, Chemical Agent, Automatic Portable, Manpack, M8 (6665-00-935-6955) Fixed Emplacement, M-10 (6665-00-169-1446) for Trucks, Utility: 1/4-Ton, M-11 (6665-00-169-1447); Truck: 3/4-Ton, M-12 (6665-00-169-1448); Truck: 2 1/2-Ton, M13 (6665-00-169-1449); Full-tracked, Armored Personnel Carriers and Recovery Vehicles, M-14 (6665-00-169-1450); Carrier, Command, and Reconnaissance, Armored: M-15 (6665-00-169-1451); with Power Supply for Truck, Utility: 1/4-Ton, M16 (6665-00-169-1452); Truck, 3/4-Ton, M-17 (6665-00-169-1453), and Truck: 2 1/2-Ton, M-18 (6665-00-169-1454)</*text*></*name*>
<*pubident*>TM 3-6665-225-12</*pubident*>
<*name*><*text*>Operator’s and Unit Maintenance Manual: Detector Kit,

Chemical Agent, VGH, AN-M15A2A </*text*></*name*>
<*pubident*>TM 3-6665-253-12</*pubident*>
<*name*><*text*>Operator’s and Unit Maintenance Manual (including Repair Parts and Special Tools List) for Decontaminating Apparatus, Portable, DS2, 1 1/2 Quart, ABC-M11 </*text*></*name*>
<*pubident*>TM 3-4230-204-12&P</*pubident*>
<*name*><*text*>Operator’s and Unit Maintenance Manual: Guided Missile System, Surface Attack, M47</*text*></*name*>
<*pubident*>TM 9-6920-480-12-1</*pubident*>
<*name*><*text*>Operator’s and Unit Maintenance Manual: Transmitting Set, Infrared M89</*text*></*name*>
<*pubident*>TM 9-6920-480-12-1</*pubident*>
<*name*><*text*>Operator’s and Unit Maintenance Manual, Vehicular Intercommunications Systems, AN/VIC-3(V)-1 thru -8</*text*></*name*>
<*pubident*>TM 11-5830-263-12</*pubident*>
<*name*><*text*>Operator’s Manual for Fighting Vehicle, Infantry, M2A3 () and Fighting Vehicle, Cavalry, M3A3 (), Turret</*text*></*name*>
<*pubident*>TM 9-2350-294-10-2</*pubident*>
<*name*><*text*>Operator’s Manual for Multiple Integrated Laser Engagement System (MILES) Simulator System, Firing Laser: M83 (1265-01-158-4560) for M2/M3 Fighting Vehicles</*text*></*name*>
<*pubident*>TM 9-1265-375-10</*pubident*>
<*name*><*text*>Operator’s Manual for Chemical-Biological Mask: Combat Vehicle, M42</*text*></*name*>
<*pubident*>TM 3-4240-300-10-2</*pubident*>
<*name*><*text*>Operator’s Manual: Firing Port Submachine Gun, 5.56mm, M231</*text*></*name*>
<*pubident*>TM 9-1005-309-10</*pubident*>
<*name*><*text*>Operator’s Manual: Machine Gun, 5.56mm, M249</*text*></*name*>
<*pubident*>TM 9-1005-201-10</*pubident*>
<*name*><*text*>Operator’s Manual, Machine Gun, 7.62mm M240 (1005-01-025-8095) and Machine Gun, 7.62mm M240C (1005-01-085-4758)</*text*></*name*>
<*pubident*>TM 9-1005-313-10</*pubident*>
<*name*><*text*>Operator’s Manual: M60, 7.62mm Machine Gun</*text*></*name*>
<*pubident*>TM 9-1005-224-10</*pubident*>
<*name*><*text*>Operator’s Manual: M16A1 Rifle</*text*></*name*>
<*pubident*>TM 9-1005-249-10</*pubident*>
<*name*><*text*>Operator’s Manual: M16A2 Rifle</*text*></*name*>
<*pubident*>TM 9-1005-319-10</*pubident*>
<*name*><*text*>Operator’s Manual for Viewers, Driver’s Thermal Viewer AN/VAS-3</*text*></*name*>
<*pubident*>TM 11-5855-292-10</*pubident*>
<*name*><*text*>Operator’s, Unit, and Intermediate Direct Support

Maintenance Manual (Including Repair Parts and Special Tools List) for High Survivability Armor for Fighting Vehicle, Infantry, M2A3 (), and Fighting Vehicle, Cavalry M3A3 ()</text></name>
<pubident>TM 9-1375-217-13&P</pubident>
<name><text>Operator’s Unit, Intermediate Maintenance (Including Repair Parts and Special Tools List) MC-93A Storage Battery</text></name>
<pubident>TM 9-6140-200-14</pubident>
<name><text>Procedures for Destruction of Electronics Materiel to Prevent Enemy Use</text></name>
<pubident>TM 750-244-2</pubident>
<name><text>Procedures for Destruction of Tank-Automotive Equipment to Prevent Enemy Use</text></name>
<pubident>TM 750-244-6</pubident>
<title><text>OTHER PUBLICATIONS</text></title>
<name><text>Expendable Items (Except Medical, Class V, Repair Parts, and Heraldic Items)</text></name>
<pubident>CTA 50-970</pubident>
</publist>
</refwp>

d. Formatted SGML document instance fragment for *<refwp>*:

9-2350-294-10-1

REFERENCES 0005 00

SCOPE

This appendix lists all forms, field manuals, and technical manuals referenced in this manual for M2A3 and M3A3.

PUBLICATION INDEX

The following index should be consulted often. Check this index for the latest changes or revisions to references given in this appendix. Check this index for new publications relating to material covered in this technical manual.

Consolidated Index of Army Publications and Blank Forms.....DA Pamphlet 25-30

The Army Maintenance Management System (TAMMS).....DA Pamphlet 738-750

FORMS

Equipment Inspection and Maintenance Work Sheet.....DA Form 2404

Organizational Control Record for Equipment.....DA Form 2401

Quality Deficiency Report, Category 2.....SF 368

Recommended Changes to Equipment Technical Publications.....DA Form 2028-2

FIELD MANUALS

Basic Cold Weather Manual.....FM 31-70

Bradley Gunnery.....FM 23–1

Desert Operations.....FM 90–3

First Aid for Soldiers.....FM 21-11

How to Fight Mountain Operations.....FM 90-6

Launcher and Cartridge 84–mm, M136 (AT4), Heat.....FM 23–25

Manual for Tracked Combat Vehicle Driver.....FM 21-306

Northern Operations.....FM 31-71

Operation and Maintenance of Ordnance Materiel: In Cold Weather (0° to -65°F).....FM 9-207

Vehicle Recovery Operations.....FM 20-22

TECHNICAL MANUALS

Ammunition and Explosives Standards.....TM 9-1300-206

Destruction of Conventional Ammunition and Improved Conventional Munitions to Prevent Enemy Use (Excluding Toxic and Incapacitating Chemical Agents)(For Combat Units) .....TM 750-244-5-1

General Ammunition.....TM 9-1300-200

Hand Receipt Covering Contents of Components of End Item (COEI), Basic Issue Items (BII), and Additional Authorization List (AAL) for Fighting Vehicle, Infantry, M2A3 (2350–01–436–0005) and Fighting Vehicle, Cavalry, M3A3 (2350–01–436–0007) .....TM 9-2350-294-10-HR

Operations and Maintenance Manual Satellite Signals Navigation Set AN/PSN-11.....TM 1-5825-291-13

0005 00-1

Figure 78 Sample <refwp> FOSI Output

G.3.1.1.1 The element <***title***> defines the work package title.

G.3.1.1.2 The element <***scope***> (see L.4.5.15) is used for a brief statement of what is covered in the reference work package. This includes the type of manual, model numbers and equipment names, purpose of equipment, any special inclusions in the manual and any other pertinent information.

G.3.1.1.3 The element <***publist***> is used for listing all publications, forms, and similar data referenced in the TM that are required to operate or maintain the equipment. This element may be presented in as a structural table. The element <***publist***> functions equivalent to a table model, but without the row and column lines. The element <***publist***> contains a required title (<***title***> see L.4.1.5.1), followed by either optional introductory paragraph(s) (<***para***> see L.4.1.5.3) and/or optional introductory paragraph(s) with required alert notices(<***specpara***> see L.4.1.1.1), followed by at least one row containing the publication name (<***name***> see L.4.1.1.1) and publication identification number (<***pubident***>). The reference publications may be grouped into major section and/or categories, thus allowing repeating the above model for each division.

a. DTD fragment for <***publist***>:

```
<!ELEMENT publist - o (title, (para | specpara)*, (name, pubident)+)+>
<!ATTLIST publist
          %refs;
          %secur;>
```

b. Attributes for <***publist***>:

1. **%REFS;** - Refer to common parameter entities for a complete description (see L.5.2).
2. **%SECUR;** - Refer to common parameter entities for a complete description (see L.5.3).

G.3.1.1.3.1 The element <***pubident***> is used for publication identification number.

a. DTD fragment for <***pubident***>:

```
<!ELEMENT pubident - - (#PCDATA)>
<!ATTLIST pubident
          %refs;
          %secur;>
```

b. Attributes for <***pubident***>:

1. **%REFS;** - Refer to common parameter entities for a complete description (see L.5.2).
2. **%SECUR;** - Refer to common parameter entities for a complete description (see L.5.3).

G.3.1.2 **Maintenance Allocation Chart (MAC) Work Package <*macwp*>.** The maintenance allocation chart work package <***macwp***> identifies and details the maintenance functions assigned to each maintenance level. This work package is for -20 or AVUM Levels Only. The work package contains the work package title (<***title***> see L.4.1.5.1), an introduction section (<***intro***>), either a MAC (<***mac***>) or an aviation MAC (<***avmac***>), required tools and equipment table (<***tereqtab***>), and MAC remarks table (<***remarktab***>). Volume separation (***%vol.group;*** see L.3.5) may not occur within this element.

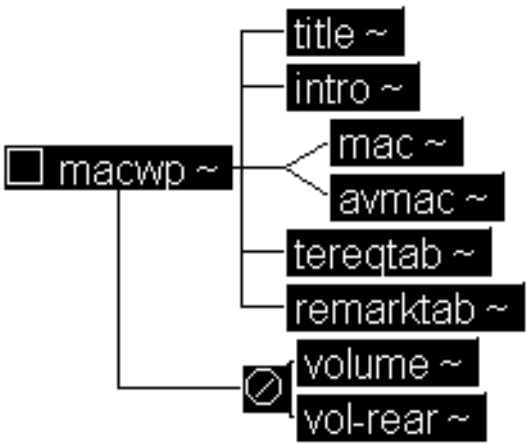

Figure 79 Maintenance Allocation Chart Work Package DTD Hierarchy

a. DTD fragment for <***macwp***>:

```
<!ELEMENT macwp - - (title, intro, (mac | avmac), tereqtab, remarktab)
                    -(%vol.group;)>
<!ATTLIST macwp
          wpno         ID       #REQUIRED
          %tracking;
          %wpbodyatt;
          %secur;>
```

b. Attributes for <***macwp***>:

1. **WPNO** - The unique number assigned to this work package by the original developer. This number remains the same when the work package is reused. The work package is referenced through an ID which is (#REQUIRED) and remains with the work package for the work package life. The FOSI generates the work package sequence number. Refer to MIL-STD-40051 Part 1 to obtain the work package number format.
2. **%TRACKING;** - Refer to common parameter entities for a complete description (see L.5.6).
3. **%WPBODYATT;** - Refer to common parameter entities for a complete description (see L.5.4).
4. **%SECUR;** - Refer to common parameter entities for a complete description (see L.5.3).

G.3.1.2.1 The element <***intro***> (see L.4.5.8) is introduction to the MAC/AVMAC work package. The paragraph(s) may be entered using an entity reference (see A.3.5.2) when the text of the paragraph(s) contains the verbatim statement found in MIL-STD-40051.

G.3.1.2.2 The element <***mac***> is a standard Maintenance Allocation Chart lists for the maintenance functions, levels and times assigned to each item. This element is equivalent to a structural table. The element <***mac***> contains a required MAC title (<***title***> see L.4.1.5.1), followed by at least one row containing a group number (<***groupno***>), a component/assembly (<***compassem***>), and a component qualifier (<***qualify***>) (maintenance function, maintenance level, optional required tools and equipment reference(s), and optional MAC remarks reference(s)) .

a. DTD fragment for <***mac***>:

```
<!ELEMENT mac - o (title, (groupno, compassem, qualify)+)>
<!ATTLIST mac
          %navlink;
          %refs;
          %secur;>
```

b. Attributes for <***mac***>:

1. **%NAVLINK;** - Refer to common parameter entities for a complete description (see L.5.8).
2. **%REFS;** - Refer to common parameter entities for a complete description (see L.5.2).
3. **%SECUR;** - Refer to common parameter entities for a complete description (see L.5.3).

G.3.1.2.2.1 The element <***groupno***> contains a group number which appears in the first column of the MAC and contains the functional group code of the unit.

a. DTD fragment for <***groupno***>:

```
<!ELEMENT groupno - o (#PCDATA)>
<!ATTLIST groupno
          %refs;
          %secur;>
```

b. Attributes for <***groupno***>:

1. **%REFS;** - Refer to common parameter entities for a complete description (see L.5.2).
2. **%SECUR;** - Refer to common parameter entities for a complete description (see L.5.3).

G.3.1.2.2.2 The element <***compassem***> contains item names of components, assemblies, subassemblies, and modules (<***name***> see L.4.5.11) for which maintenance with an optional unit designator (<***typedes***>) is authorized, appears in the second column of the MAC.

a. DTD fragment for <***compassem***>:

```
<!ELEMENT compassem - o (name, typedes?)>
<!ATTLIST compassem
          %navlink;
          %refs;
          %secur;>
```

b. Attributes for <***compassem***>:

1. **%NAVLINK;** - Refer to common parameter entities for a complete description (see L.5.8).
2. **%REFS;** - Refer to common parameter entities for a complete description (see L.5.2).
3. **%SECUR;** - Refer to common parameter entities for a complete description (see L.5.3).

G.3.1.2.2.2.1 The element <***typedes***> contains the type designation for the unit which is presented after the component in the second column.

a. DTD fragment for <***typedes***>:

```
<!ELEMENT typedes - o (#PCDATA)>
<!ATTLIST typedes
          %refs;
          %secur;>
```

b. Attributes for <***typedes***>:

1. **%REFS;** - Refer to common parameter entities for a complete description (see L.5.2).
2. **%SECUR;** - Refer to common parameter entities for a complete description (see L.5.3).

G.3.1.2.2.3 The element <***qualify***> contains a qualification of components in a MAC. The component qualifier contains maintenance function (<***maintfunc***>), maintenance level (<***maintclass***>), optional required tools and equipment reference(s) (<***terefs***>), and optional MAC remarks reference(s) (<***remarkrefs***>). This element contains the remaining columns in the table.

a. DTD fragment for <***qualify***>:

```
<!ELEMENT qualify - o (maintfunc, maintclass, terefs?, remarkrefs?)+>
<!ATTLIST qualify
          %refs;
          %secur;>
```

b. Attributes for <***qualify***>:

1. **%REFS;** - Refer to common parameter entities for a complete description (see L.5.2).
2. **%SECUR;** - Refer to common parameter entities for a complete description (see L.5.3).

G.3.1.2.2.3.1 The element <***maintfunc***> contains the maintenance function to be performed on the item listed, in column two, is entered in the third column of the MAC. The maintenance function is entered using the attribute “FUNC”.

a. DTD fragment for <***maintfunc***>:

```
<!ELEMENT maintfunc - o EMPTY>
<!ATTLIST maintfunc
          func    (inspect | test |
                   service | adjust |
                   align | calib |
                   remove | replace |
                   repair | overhaul |
                   rebuild)               #IMPLIED
          %refs;
          %secur;>
```

b. Attributes for <***maintfunc***>:

1. **FUNC** - The maintenance functions allowed to be entered in the third column of the MAC.
   (a) “INSPECT” - Indicates the action is to determine the serviceability of an item through examination.

(b) "TEST" - Indicates the action is to verify serviceability by measuring characteristics against prescribed standards.

(c) "SERVICE" - Indicates the action is to periodically to keep an item in proper operating condition.

(d) "ADJUST" - Indicates the action is to maintain or regulate by bringing into proper position, or by setting the operating characteristics to specified parameters.

(e) "ALIGN" - Indicates the action is to adjust specified variable elements of an item.

(f) "CALIB" - Indicates the action is to determine and cause corrections to be made or to be adjusted on instruments.

(g) "REMOVE" - Indicates the action is to remove and install the same item when required to perform service or maintenance function.

(h) "REPLACE" - Indicates the action is to remove an unserviceable item and install a serviceable counterpart in its place.

(i) "REPAIR" - Indicates the action is to apply maintenance services to an item by correcting specific damage, fault, malfunction, or failure in a component.

(j) "OVERHAUL" - Indicates the action is to restore an item to a completely serviceable/ operational condition.

(k) "REBUILD" - Indicates the action is to restore the unserviceable equipment to a like new condition.

2. **%REFS;** - Refer to common parameter entities for a complete description (see L.5.2).

3. **%SECUR;** - Refer to common parameter entities for a complete description (see L.5.3).

G.3.1.2.2.3.2 The element <***maintclass***> contains the maintenance classification appears in the fourth labeled column in the MAC (fourth to eighth structural columns) and contains the authorized maintenance level and the time required to perform the task. The time required to complete the task is entered after the element name representing the appropriate level of maintenance (unit, direct, general support and depot).

a. DTD fragment for <***maintclass***>:

```
<!ELEMENT maintclass - o (unit | direct | gensup | depot)>
<!ATTLIST maintclass
          %refs;
          %secur;>
```

b. Attributes for <***maintclass***>:

1. **%REFS;** - Refer to common parameter entities for a complete description (see L.5.2).

2. **%SECUR;** - Refer to common parameter entities for a complete description (see L.5.3).

G.3.1.2.2.3.2.1 The element <***unit***> contains the unit level is the first subdivision of the labeled fourth column (fourth and fifth structural columns). The work time will be entered under either crew (C) or operator (O).

a. DTD fragment for <***unit***>:

```
<!ELEMENT unit - o ((crew | operator), org)>
<!ATTLIST unit
```

```
            %refs;
            %secur;>
```

b. Attributes for <***unit***>:

1. **%REFS;** - Refer to common parameter entities for a complete description (see L.5.2).
2. **%SECUR;** - Refer to common parameter entities for a complete description (see L.5.3).

G.3.1.2.2.3.2.1.1 The element <***crew***> contains the crew work time (***%text;*** see L.3.6) which is entered within this element and it will appear under the crew/operator maintenance level (C) subdivision of the labeled fourth column (fourth structural column).

a. DTD fragment for <***crew***>:

```
<!ELEMENT crew - o (%text;)>
<!ATTLIST crew
          %refs;
          %secur;>
```

b. Attributes for <***crew***>:

1. **%REFS;** - Refer to common parameter entities for a complete description (see L.5.2).
2. **%SECUR;** - Refer to common parameter entities for a complete description (see L.5.3).

G.3.1.2.2.3.2.1.2 The element <***operator***> contains the operator work time (***%text;*** see L.3.6) which is entered within this element and it will appear under the crew/operator maintenance level (C) subdivision of the labeled fourth column (fourth structural column).

a. DTD fragment for <***operator***>:

```
<!ELEMENT operator - o (%text;)>
<!ATTLIST operator
          %refs;
          %secur;>
```

b. Attributes for <***operator***>:

1. **%REFS;** - Refer to common parameter entities for a complete description (see L.5.2).
2. **%SECUR;** - Refer to common parameter entities for a complete description (see L.5.3).

G.3.1.2.2.3.2.1.3 The element <***org***> contains the organizational work time (***%text;*** see L.3.6) which is entered within this element and it will appear under the organizational (unit) maintenance level (O) subdivision of the labeled fourth column (fifth structural column).

a. DTD fragment for <***org***>:

```
<!ELEMENT org - o (%text;)>
<!ATTLIST org
          %refs;
          %secur;>
```

b. Attributes for <***org***>:

1. **%REFS;** - Refer to common parameter entities for a complete description (see L.5.2).
2. **%SECUR;** - Refer to common parameter entities for a complete description (see L.5.3).

G.3.1.2.2.3.2.2 The element <***direct***> contains the direct support (DS) maintenance level (F) which is the second subdivision of the labeled fourth column (sixth structural column). The DS work time (***%text;*** see L.3.6) will be entered within element.

a. DTD fragment for <***direct***>:

```
<!ELEMENT direct - o (%text;)>
<!ATTLIST direct
          %refs;
          %secur;>
```

b. Attributes for <***direct***>:

1. **%REFS;** - Refer to common parameter entities for a complete description (see L.5.2).
2. **%SECUR;** - Refer to common parameter entities for a complete description (see L.5.3).

G.3.1.2.2.3.2.3 The element <***gensup***> contains the general support (GS) maintenance level (H) which is the third subdivision of the labeled fourth column (seventh structural column). The GS work time ***%text;*** see L.3.6) will be entered within element.

a. DTD fragment for <***gensup***>:

```
<!ELEMENT gensup - o (%text;)>
<!ATTLIST gensup
          %refs;
          %secur;>
```

b. Attributes for <***gensup***>:

1. **%REFS;** - Refer to common parameter entities for a complete description (see L.5.2).
2. **%SECUR;** - Refer to common parameter entities for a complete description (see L.5.3).

G.3.1.2.2.3.2.4 The element <***depot***> contains the depot level maintenance (D) which is the fourth subdivision of the labeled fourth column (eighth structural column and aviation MAC sixth structural column). The depot work time ***%text;*** see L.3.6) will be entered within the element.

a. DTD fragment for <***depot***>:

```
<!ELEMENT depot - o (%text;)>
<!ATTLIST depot
          %refs;
          %secur;>
```

b. Attributes for <***depot***>:

1. **%REFS;** - Refer to common parameter entities for a complete description (see L.5.2).
2. **%SECUR;** - Refer to common parameter entities for a complete description (see L.5.3).

G.3.1.2.2.3.3 The element <***terefs***> contains a reference to an item in the tools and equipment table following the MAC. The fifth labeled column (ninth structural column and aviation MAC seventh structural column) contains the tools and equipment item reference code (use the attribute "REFS" to reference the item).

a. DTD fragment for <***terefs***>:

```
<!ELEMENT terefs - o EMPTY>
<!ATTLIST terefs
          refs    ID   #IMPLIED
          %secur;>
```

b. Attributes for <***terefs***>:

1. **REFS** - The cross reference identifier to the item(s) in the tools and equipment table.
2. **%SECUR;** - Refer to common parameter entities for a complete description (see L.5.3).

G.3.1.2.2.3.4 The element <***remarkrefs***> contains a reference to a remark found in the remarks table following the MAC. The sixth labeled column (tenth structural column and aviation MAC eighth structural column) contains the remark reference code (use the attribute "REFS" to reference the remark).

a. DTD fragment for <***remarkrefs***>:

```
<!ELEMENT remarkrefs - o EMPTY>
<!ATTLIST remarkrefs
          refs    ID   #IMPLIED
          %secur;>
```

b. Attributes for <***remarkrefs***>:

1. **REFS** - The cross reference identifier to the remark(s) in the remarks table.
2. **%SECUR;** - Refer to common parameter entities for a complete description (see L.5.3).

G.3.1.2.3 The element <***avmac***> is a standard aviation Maintenance Allocation Chart lists for the maintenance functions, levels and times assigned to each item. The AVMAC is identical to the normal MAC except that it only identifies three levels (AVUM, AVIM and depot) of maintenance instead of five levels. This element is equivalent to a structural table. The element <***avmac***> contains a required MAC title(<***title***> see L.4.1.5.1), followed by at least one row containing a group number (<***groupno***> see G.3.1.2.2.1), a component/assembly (<***compassem***> see G.3.1.2.2.2), and an aviation component qualifier (<***avqualify***>) (maintenance function, aviation maintenance level, optional required tools and equipment reference(s), and optional MAC remarks reference(s)).

a. DTD fragment for <***avmac***>:

```
<!ELEMENT avmac - o (title, (groupno, compassem, avqualify)+)>
<!ATTLIST avmac
          %navlink;
          %refs;
          %secur;>
```

b. Attributes for <***avmac***>:

1. **%NAVLINK;** - Refer to common parameter entities for a complete description (see L.5.8).
2. **%REFS;** - Refer to common parameter entities for a complete description (see L.5.2).
3. **%SECUR;** - Refer to common parameter entities for a complete description (see L.5.3).

G.3.1.2.3.1 The element <***avqualify***> contains a qualification of components in an aviation MAC. The component qualifier contains maintenance function (<***maintfunc***> see G.3.1.2.2.3.1), aviation maintenance level (<***avmaintclass***>), optional required tools and equipment reference(s) (<***terefs***> see G.3.1.2.2.3.3), and optional MAC remarks reference(s) (<***remarkrefs***> see G.3.1.2.2.3.4). This element contains the remaining columns in the table.

a. DTD fragment for <***avqualify***>:

```
<!ELEMENT avqualify - o (maintfunc, avmaintclass, terefs?, remarkrefs?)+>
<!ATTLIST avqualify
          %refs;
          %secur;>
```

b. Attributes for <***avqualify***>:

1. **%REFS;** - Refer to common parameter entities for a complete description (see L.5.2).
2. **%SECUR;** - Refer to common parameter entities for a complete description (see L.5.3).

G.3.1.2.3.1.1 The element <***avmaintclass***> contains the fourth labeled column and spans the fourth to sixth structural columns of the table. The maintenance classification appears in the fourth (AVUM <***avum***>), fifth (AVIM <***avim***>), or sixth (depot <***depot***> see G.3.1.2.2.3.2.4) column in the aviation MAC and contains the authorized maintenance level and the time required to perform the task. The time required to complete the task is entered after the element name representing the appropriate level of maintenance (AVUM, AVIM, and depot).

a. DTD fragment for <***avmaintclass***>:

```
<!ELEMENT avmaintclass - o (avum | avim | depot)>
<!ATTLIST avmaintclass
          %refs;
          %secur;>
```

b. Attributes for <***avmaintclass***>:

1. **%REFS;** - Refer to common parameter entities for a complete description (see L.5.2).
2. **%SECUR;** - Refer to common parameter entities for a complete description (see L.5.3).

G.3.1.2.3.1.1.1 The element <***avum***> contains the aviation unit maintenance (AVUM) level (O) which appears in the first subdivision in the labeled fourth column (fourth structural column). The AVUM work time ***%text;*** see L.3.6) will be entered within this element.

a. DTD fragment for <***avum***>:

```
<!ELEMENT avum - o (%text;)>
<!ATTLIST avum
          %refs;
```

```
            %secur;>
```

b. Attributes for <***avum***>:

1. **%REFS;** - Refer to common parameter entities for a complete description (see L.5.2).
2. **%SECUR;** - Refer to common parameter entities for a complete description (see L.5.3).

G.3.1.2.3.1.1.2 The element <***avim***> contains the aviation intermediate maintenance (AVIM) level (O) which appears in the second subdivision in the labeled fourth column (fifth structural column). The AVIM work time (***%text;*** see L.3.6) will be entered within this element.

a. DTD fragment for <***avim***>:

```
<!ELEMENT avim - o (%text;)>
<!ATTLIST avim
            %refs;
            %secur;>
```

b. Attributes for <***avim***>:

1. **%REFS;** - Refer to common parameter entities for a complete description (see L.5.2).
2. **%SECUR;** - Refer to common parameter entities for a complete description (see L.5.3).

G.3.1.2.4 The element <***tereqtab***> is used for a tabular list of all tools and test equipment, both special and common, required to maintain the equipment. The element <***tereqtab***> contains a required title (<***title***> see L.4.1.5.1), followed by at least one row containing a tools and equipment reference code (<***terefcode***>), the lowest level of maintenance authorized to use the tool or test equipment (<***maintenance***>), the name or identification of the tool or test equipment (<***name***> see L.4.5.11), the NSN number (<***nsn***> see L.4.5.12) and the tool number (<***toolno***>)

a. DTD fragment for <***tereqtab***>:

```
<!ELEMENT tereqtab - o (title, (terefcode, maintenance, name, nsn,
                          toolno)+)>
<!ATTLIST tereqtab
            %refs;
            %secur;>
```

b. Attributes for <***tereqtab***>:

1. **%REFS;** - Refer to common parameter entities for a complete description (see L.5.2).
2. **%SECUR;** - Refer to common parameter entities for a complete description (see L.5.3).

G.3.1.2.4.1 The element <***terefcode***> contains the first column of the tools and equipment references table which contains a tools and equipment reference code (***%text;*** see L.3.6). The attribute “ID” correlates to a reference code (using the element <***terefs***> attribute “REFS”) entered in the fifth labeled column of the MAC.

a. DTD fragment for <***terefcode***>:

```
<!ELEMENT terefcode - o (%text;)>
<!ATTLIST terefcode
```

```
        id              ID   #REQUIRED>
```

b. Attributes for <***terefcode***>:

1. **ID** - Specifies the unique identifier of an item in the tools and equipment table.

G.3.1.2.4.2 The element <***maintenance***> contains the lowest level of maintenance authorized to use the tool or test equipment which is entered in the second column of the tools and equipment reference table.

a. DTD fragment for <***maintenance***>:

```
<!ELEMENT maintenance - o EMPTY>
<!ATTLIST maintenance
        lvl     NAMES    #REQUIRED
        %refs;
        %secur;>
```

b. Attributes for <***maintenance***>:

1. **LVL** - Specifies the lowest maintenance level(s) code allowed.
   The MAC contains the following maintenance level codes:
   (a) "C" - Crew or operator.
   (b) "O" - Organizational (unit).
   (c) "F" - Direct support (DS).
   (d) "H" - General support (GS).
   (e) "D" - Depot.

   The aviation MAC contains the following maintenance level codes:
   (a) "O" - AVUM.
   (b) "F" - AVIM.
   (c) "D" - Depot.
2. **%REFS;** - Refer to common parameter entities for a complete description (see L.5.2). **%SECUR;** - Refer to common parameter entities for a complete description (see L.5.3).

G.3.1.2.4.3 The element <***toolno***> contains the manufacturer's part number, model number, or type number (***%text;*** see L.3.6) which is entered in the fifth column of the tools and equipment reference table.

a. DTD fragment for <***toolno***>:

```
<!ELEMENT toolno - o (%text;)>
<!ATTLIST toolno
        %refs;
        %secur;>
```

b. Attributes for <***toolno***>:

1. **%REFS;** - Refer to common parameter entities for a complete description (see L.5.2).
2. **%SECUR;** - Refer to common parameter entities for a complete description (see L.5.3).

G.3.1.2.5 The element <***remarktab***> provides pertinent remarks to the maintenance functions as listed in the sixth labeled column of the MAC. The element <***remarktab***> contains an optional title (<***title***> see L.4.1.5.1),

followed by at least one row containing a code letter (<***remarkcode***>) that is referenced in the MAC and remarks containing any discursive information pertinent to the maintenance function performed (<***remarks***>).

a. DTD fragment for <***remarktab***>:

```
<!ELEMENT remarktab - o (title?, (remarkcode, remarks)+)>
<!ATTLIST remarktab
          %refs;
          %secur;>
```

b. Attributes for <***remarktab***>:

1. **%REFS;** - Refer to common parameter entities for a complete description (see L.5.2).
2. **%SECUR;** - Refer to common parameter entities for a complete description (see L.5.3).

G.3.1.2.5.1 The element <***remarkcode***> contains the first column of the remarks table which contains a code letter (***%text;*** see L.3.6) (referenced using the attribute "ID" for a unique identifier) that is referenced in the sixth column of the MAC (using the element <***remarkrefs***> attribute "REFS").

a. DTD fragment for <***remarkcode***>:

```
<!ELEMENT remarkcode - o (%text;)>
<!ATTLIST remarkcode
          id    ID     #REQUIRED
          %navlink;
          %secur;>
```

b. Attributes for <***remarkcode***>:

1. **ID** - Specifies the unique identifier of the remark entry.
2. **%NAVLINK;** - Refer to common parameter entities for a complete description (see L.5.8).
3. **%SECUR;** - Refer to common parameter entities for a complete description (see L.5.3).

G.3.1.2.5.2 The element <***remarks***> contains remarks information (***%text;*** see L.3.6) pertinent to the maintenance function performed as indicated in the MAC.

a. DTD fragment for <***remarks***>:

```
<!ELEMENT remarks - o (%text;)>
<!ATTLIST remarks
          %refs;
          %secur;>
```

b. Attributes for <***remarks***>:

1. **%REFS;** - Refer to common parameter entities for a complete description (see L.5.2).
2. **%SECUR;** - Refer to common parameter entities for a complete description (see L.5.3).

G.3.1.3 **Repair Parts and Special Tools List (RPSTL) Work Package <*rpstlwp*>.** The repair parts and special tools list work package <***rpstlwp***> is for -20/ AVUM level or above. For a complete description of the RPSTL work package refer to Appendix MIL-STD-2361(SC) PIM Chapter SGML Elements, Parts Information. The <***rpstlwp***> contains the following elements:

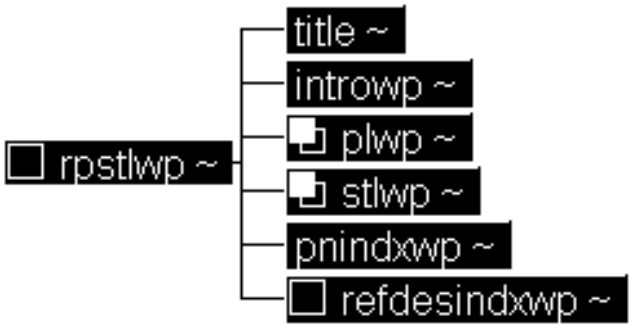

Figure 80 Repair Parts and Special Tools List Work Package DTD Hierarchy

a. DTD fragment for <***rpstlwp***>:

```
<!ELEMENT rpstlwp - - (title, introwp, plwp+, stlwp+, pnindxwp,
                       refdesindxwp?)>
<!ATTLIST rpstlwp
          wpno         ID       #REQUIRED
          %tracking;
          %wpbodyatt;
          %secur;>
```

b. Attributes for <***rpstlwp***>:

1. **WPNO** - The unique number assigned to this work package by the original developer. This number remains the same when the work package is reused. The work package is referenced through an ID which is (#REQUIRED) and remains with the work package for the work package life. The FOSI generates the work package sequence number. Refer to MIL-STD-40051 Part 1 to obtain the work package number format.
2. **%TRACKING;** - Refer to common parameter entities for a complete description (see L.5.6).
3. **%WPBODYATT;** - Refer to common parameter entities for a complete description (see L.5.4).
4. **%SECUR;** - Refer to common parameter entities for a complete description (see L.5.3).

G.3.1.4 **Components of End Item (COEI) and Basic Issue Items (BII) Lists Work Package <*coeibiiwp*>.** The COEI and BII lists work package <***coeibiiwp***> is prepared as an inventory of the equipment and items required to operate the equipment to ensure safe and efficient operation. The element contains a work package title (<***title***> see L.4.1.5.1), followed by an introduction to the work package (<***intro***> see L.4.5.8) (The paragraph(s) may be entered using an entity reference (see A.3.5.2) when the text of the paragraph(s) contains the verbatim statement found in MIL-STD-40051.). A COEI list (<***coei***>) and a BII list (<***bii***>). Volume separation (***%vol.group;*** see L.3.5) may not occur within this element.

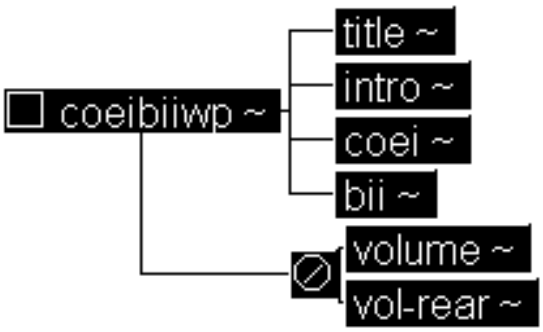

Figure 81 Components of End Item (COEI) and Basic Issue Items (BII) Work Package DTD Hierarchy

a. DTD fragment for <***coeibiiwp***>:

```
<!ELEMENT coeibiiwp - - (title, intro, coei, bii)  -(%vol.group;)>
<!ATTLIST coeibiiwp
          wpno       ID       #REQUIRED
          %navlink;
          %tracking;
          %wpbodyatt;
          %secur;>
```

b. Attributes for <***coeibiiwp***>:

1. **WPNO** - The unique number assigned to this work package by the original developer. This number remains the same when the work package is reused. The work package is referenced through an ID which is (#REQUIRED) and remains with the work package for the work package life. The FOSI generates the work package sequence number. Refer to MIL-STD-40051 Part 1 to obtain the work package number format.
2. **%NAVLINK;** - Refer to common parameter entities for a complete description (see L.5.8).
3. **%TRACKING;** - Refer to common parameter entities for a complete description (see L.5.6).
4. **%WPBODYATT;** - Refer to common parameter entities for a complete description (see L.5.4).
5. **%SECUR;** - Refer to common parameter entities for a complete description (see L.5.3).

G.3.1.4.1 The element <***coei***> contains a component of end item table that lists and illustrates all COEI items for inventory purposes. The element <***coei***> contains at least one figure (<***figure***> see L.4.4.1) followed by a components of end item table (<***coeitab***>).

a. DTD fragment for <***coei***>:

```
<!ELEMENT coei - - (figure+, coeitab)>
<!ATTLIST coei
          %refs;
```

```
        %secur;>
```

b. Attributes for <***coei***>:

1. **%REFS;** - Refer to common parameter entities for a complete description (see L.5.2).
2. **%SECUR;** - Refer to common parameter entities for a complete description (see L.5.3).

G.3.1.4.1.1 The element <***coeitab***> contains all spare and repair parts that are removed from the major end item and separately packaged or stowed for transportation or movement are listed in the COEI list table. The element <***coeitab***> contains at least one category of COEI entries (<***category***> see G.3.1.4.1.1.1) or at least one COEI entry (<***coei-entry***>).

a. DTD fragment for <***coeitab***>:

```
<!ELEMENT coeitab - o (category+ | coei-entry+)>
<!ATTLIST coeitab
          %nodeloc;
          %refs;
          %secur;>
```

b. Attributes for <***coeitab***>:

1. **%NODELOC;** - Refer to common parameter entities for a complete description (see L.5.9).
2. **%REFS;** - Refer to common parameter entities for a complete description (see L.5.2).
3. **%SECUR;** - Refer to common parameter entities for a complete description (see L.5.3).

G.3.1.4.1.1.1 The element <***category***> is used to represent a table that is subdivided into parts, for example by subassemblies. After the category element is entered, the specific entries for that particular table type are entered. There is at least one category in the table.

a. DTD fragment for <***category***>:

```
<!ELEMENT category - o (coei-entry+ | bii-entry+ | aal-entry+ |
                        expdur-entry+ | tool-entry+ | avtool-entry+ |
                        mrpl-entry+ | consum-entry+)>
<!ATTLIST category
          catg-name    CDATA   #REQUIRED
          %navlink;
          %nodeloc;
          %refs;
          %secur;>
```

b. Attributes for <***category***>:

1. **CATG-NAME** - Specifies the category name which is the heading that will appear in the table.
2. **%NAVLINK;** - Refer to common parameter entities for a complete description (see L.5.8).
3. **%NODELOC;** - Refer to common parameter entities for a complete description (see L.5.9).
4. **%REFS;** - Refer to common parameter entities for a complete description (see L.5.2).
5. **%SECUR;** - Refer to common parameter entities for a complete description (see L.5.3).

G.3.1.4.1.1.2 The element <***coei-entry***> contains the entries of a components of end item list table which are contained within this element. It is equivalent to a "row" element in a structural table.

a. DTD fragment for <***coei-entry***>:

```
<!ELEMENT coei-entry - o (illno, (nsn, dcpno, um, qty)+)>
<!ATTLIST coei-entry
          %navlink;
          %refs;
          %secur;>
```

b. Attributes for <***coei-entry***>:

1. **%NAVLINK;** - Refer to common parameter entities for a complete description (see L.5.8).
2. **%REFS;** - Refer to common parameter entities for a complete description (see L.5.2).
3. **%SECUR;** - Refer to common parameter entities for a complete description (see L.5.3).

G.3.1.4.1.1.2.1 The element <***illno***> contains the illustration callout number which is entered in the first column in the COEI list and relates the illustration to the list. The element <***illno***> contains the parameter entity ***%text;*** (see L.3.6).

a. DTD fragment for <***illno***>:

```
<!ELEMENT illno - o (%text;)>
<!ATTLIST illno
          %refs;
          %secur;>
```

b. Attributes for <***illno***>:

1. **%REFS;** - Refer to common parameter entities for a complete description (see L.5.2).
2. **%SECUR;** - Refer to common parameter entities for a complete description (see L.5.3).

G.3.1.4.1.1.2.2 The element <***nsn***> (see L.4.5.12) is the callout NSN and appears in the second column of the COEI list.

G.3.1.4.1.1.2.3 The element <***dcpno***> contains the description (<***desc***>), cage number (<***cageno***> see L.4.5.1), and part number (<***partno***> see L.4.5.13), all of which appear in the third column of the COEI list. The usable on code (<***uoc***>) appears in the fourth column of the COEI list.

a. DTD fragment for <***dcpno***>:

```
<!ELEMENT dcpno - o (desc, (cageno, partno, uoc)+)>
<!ATTLIST dcpno
          %refs;
          %secur;>
```

b. Attributes for <***dcpno***>:

1. **%REFS;** - Refer to common parameter entities for a complete description (see L.5.2).
2. **%SECUR;** - Refer to common parameter entities for a complete description (see L.5.3).

G.3.1.4.1.1.2.3.1 The element <***desc***> contains the name and description of the item which are entered in the third column of the COEI list. The element <***desc***> contains the parameter entity ***%text;*** (see L.3.6).

a. DTD fragment for <***desc***>:

```
<!ELEMENT desc - o (%text;)>
<!ATTLIST desc
          %refs;
          %secur;>
```

b. Attributes for <***desc***>:

1. **%REFS;** - Refer to common parameter entities for a complete description (see L.5.2).
2. **%SECUR;** - Refer to common parameter entities for a complete description (see L.5.3).

G.3.1.4.1.1.2.3.2 The element <***uoc***> contains more than one applicable model if it exists, it is identified by the usable on code. This code appears in the fourth column of the COEI list. The element <***uoc***> contains the parameter entity ***%text;*** (see L.3.6).

a. DTD fragment for <***uoc***>:

```
<!ELEMENT uoc - o (%text;)>
<!ATTLIST uoc
          %refs;
          %secur;>
```

b. Attributes for <***uoc***>:

1. **%REFS;** - Refer to common parameter entities for a complete description (see L.5.2).
2. **%SECUR;** - Refer to common parameter entities for a complete description (see L.5.3).

G.3.1.4.1.1.2.4 The element <***um***> contains the unit of measure which is specified in the sixth column of the COEI List. The element <***um***> contains the parameter entity ***%text;*** (see L.3.6).

a. DTD fragment for <***um***>:

```
<!ELEMENT um - o (%text;)>
<!ATTLIST um
          %refs;
          %secur;>
```

b. Attributes for <***um***>:

1. **%REFS;** - Refer to common parameter entities for a complete description (see L.5.2).
2. **%SECUR;** - Refer to common parameter entities for a complete description (see L.5.3).

G.3.1.4.1.1.2.5 The element <***qty***> (see L.4.6.2.2.1.4) the quantity required and appears in the fifth column of the COEI list.

G.3.1.4.2 The element <***bii***> contains a basic issue items table for listing and illustrating all BII items required to operate the equipment. The BII items are not part of the end item but are required to operate it.

The element <***bii***> contains at least one figure (<***figure***> see L.4.4.1) followed by a basic issue items table (<***biitab***>).

a. DTD fragment for <***bii***>:

```
<!ELEMENT bii - o (figure+, biitab)>
<!ATTLIST bii
          %refs;
          %secur;>
```

b. Attributes for <***bii***>:

1. **%REFS;** - Refer to common parameter entities for a complete description (see L.5.2).
2. **%SECUR;** - Refer to common parameter entities for a complete description (see L.5.3).

G.3.1.4.2.1 The element <***biitab***> contains the basic issue items necessary for operation, operate it and to do emergency repairs, which are contained in the BII list table. The element <***biitab***> contains at least one category of BII entries (<***category***> see G.3.1.4.1.1.1) or at least one BII entry (<***bii-entry***>).

a. DTD fragment for <***biitab***>:

```
<!ELEMENT biitab - o (category+ | bii-entry+)>
<!ATTLIST biitab
          %navlink;
          %refs;
          %secur;>
```

b. Attributes for <***biitab***>:

1. **%NAVLINK;** - Refer to common parameter entities for a complete description (see L.5.8).
2. **%REFS;** - Refer to common parameter entities for a complete description (see L.5.2).
3. **%SECUR;** - Refer to common parameter entities for a complete description (see L.5.3).

G.3.1.4.2.1.1 The element <***bii-entry***> contains the entries for basic issued items list table. It is equivalent to a "row" element in a structural table.

a. DTD fragment for <***bii-entry***>:

```
<!ELEMENT bii-entry - o (illno, (nsn+, dcpno, um, qty)+)>
<!ATTLIST bii-entry
          %navlink;
          %refs;
          %secur;>
```

b. Attributes for <***bii-entry***>:

1. **%NAVLINK;** - Refer to common parameter entities for a complete description (see L.5.8).

c. **%REFS;** - Refer to common parameter entities for a complete description (see L.5.2).

d. **%SECUR;** - Refer to common parameter entities for a complete description (see L.5.3).

G.3.1.4.2.1.1.1 The element <***illno***> (see G.3.1.4.1.1.2.1) contains the illustration callout number which is entered in the first column in the BIII list and relates the illustration to the list.

G.3.1.4.2.1.1.2 The element <***nsn***> (see L.4.5.12) is the callout NSN and appears in the second column of the BII list.

G.3.1.4.2.1.1.3 The element <***dcpno***> contains the description (<***desc***> see G.3.1.4.1.1.2.3.1), cage number (<***cageno***> see L.4.5.1), and part number (<***partno***> see L.4.5.13), all of which appear in the third column of the BII list. The usable on code (<***uoc***> see G.3.1.4.1.1.2.3.2) appears in the fourth column of the BII list.

G.3.1.4.2.1.1.4 The element <***um***> (see G.3.1.4.1.1.2.4) contains the unit of measure which is specified in the fifth column of the BII List.

G.3.1.4.2.1.1.5 The element <***qty***> (see L.4.6.2.2.1.4) the quantity required and appears in the sixth column of the BII list.

G.3.1.5 **Additional Authorization List (AAL) Work Package <*aalwp*> (Operator Only).** The additional authorization list work package <***aalwp***> contains a listing of additional items authorized for the support of the component. The element contains a work package title (<***title***> see L.4.1.5.1), an introduction to the work package (<***intro***> see L.4.5.8), and the AAL table (<***aal***>). Volume separation (***%vol.group;*** see L.3.5) may not occur within this element.

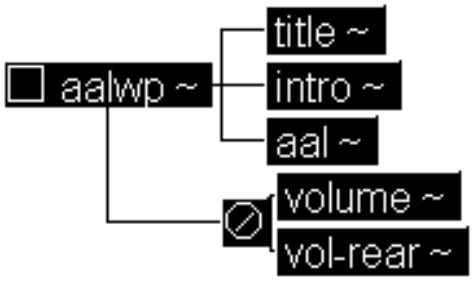

Figure 82 Additional Authorization List Work Package DTD Hierarchy

a. DTD fragment for <***aalwp***>:

```
<!ELEMENT aalwp - - (title, intro, aal) -(%vol.group;)>
<!ATTLIST aalwp
          wpno          ID       #REQUIRED
          %navlink;
          %tracking;
          %wpbodyatt;
          %secur;>
```

b. Attributes for <***aalwp***>:

1. **WPNO** - The unique number assigned to this work package by the original developer. This number remains the same when the work package is reused. The work package is referenced through an ID which is (#REQUIRED) and remains with the work package for the work package life. The FOSI generates the work package sequence number. Refer to MIL-STD-40051 Part 1 to obtain the work package number format.
2. **%NAVLINK;** - Refer to common parameter entities for a complete description (see L.5.8).
3. **%TRACKING;** - Refer to common parameter entities for a complete description (see L.5.6).
4. **%WPBODYATT;** - Refer to common parameter entities for a complete description (see L.5.4).

5. **%SECUR; -** Refer to common parameter entities for a complete description (see L.5.3).

c. SGML document instance fragment for ***<aalwp>***:

```
<aalwp wpno="S00003-9-2350-294">
<title><text>ADDITIONAL AUTHORIZATION LIST</text></title>
<intro>
<title><text>INTRODUCTION</text></title>
<subtitle><text>SCOPE</text></subtitle>
<para>This appendix lists additional items you are authorized for the
support of the M2A3 and M3A3.</para>
<subtitle><text>GENERAL</text></subtitle>
<para>This list identifies items that do not have to accompany the
vehicle, and that do not have to be turned in with it.  These items are
all authorized to you by CTA, MTOE, TDA, or JTA.</para>
<subtitle><text>EXPLANATION OF LISTING</text></subtitle>
<para>National stock numbers, descriptions, and quantities are provided
to help you identify and request that additional items you require to
support this equipment.  The items are listed in alphabetical sequence
by item name under the type document (i.e., CTA, MTOE, TDA, or JTA)
which authorizes the item(s) to you.  If the item you require differs
between serial numbers of the same model, effective serial numbers are
shown in the last line of the description.  If item required differs
for different models of this equipment, the model is shown under the
''Usable On'' heading in the description column.  These codes are
identified as:
<deflist>
<term>Code</term><def><para>Used on</para></def>
<term>2A3</term><def><para>M2A3 ONLY</para></def>
<term>3A3</term><def><para>M3A3 ONLY</para></def>
</deflist>
</para>
</intro>
<aal>
<aal-entry id="NSN-6665-00-935-6955">
<nsn>6665-00-935-6955</nsn>
<dcpno><desc>ALARM, CHEMICAL AGENT, M-8 A1 W/ACCESSORIES (INTERIOR-LEFT
SPONSON) </desc><cageno> (81361)</cageno><partno>C5-15-8803</
partno><uoc><null></uoc></dcpno>
<um>EA</um>
<qty>1</qty>
</aal-entry>
<aal-entry id="NSN-6665-00-859-2215">
<nsn>6665-00-859-2215</nsn>
<dcpno><desc>ALARM UNIT, CHEMICAL M42E1</desc><cageno>81361</
```

cageno><*partno*>D5-15-4826</*partno*><*uoc*><*null*></*uoc*></*dcpno*>
<*um*>EA</*um*>
<*qty*>1</*qty*>
</*aal-entry*>
<*aal-entry id="NSN-6135-00-935-8738"*>
<*nsn*>6135-00-935-8738</*nsn*>
<*dcpno*><*desc*> BATTERY, DRY CELL</*desc*><*cageno*><*null*></*cageno*><*partno*>BA3202UF</*partno*><*uoc*><*null*></*uoc*></*dcpno*>
<*um*>EA</*um*>
<*qty*>4</*qty*>
</*aal-entry*>
<*aal-entry id="NSN-5315-00-450-3528"*>
<*nsn*>5315-00-450-3528</*nsn*>
<*dcpno*><*desc*>BATTERY, DRY CELL</*desc*><*cageno*><*null*></*cageno*><*partno*>BA3517/U</*partno*><*uoc*><*null*></*uoc*></*dcpno*>
<*um*>EA</*um*>
<*qty*>1</*qty*>
</*aal-entry*>
<*aal-entry id="NSN-6665-00-859-2201"*>
<*nsn*>6665-00-859-2201</*nsn*>
<*dcpno*><*desc*>DETECTOR KIT, CHEMICAL M43</*desc*><*cageno*>81361</*cageno*><*partno*>D5-15-4400</*partno*><*uoc*><*null*></*uoc*></*dcpno*>
<*um*>EA</*um*>
<*qty*>1</*qty*>
</*aal-entry*>
<*aal-entry id="NSN-6665-00-859-2214"*>
<*nsn*>6665-00-859-2214</*nsn*>
<*dcpno*><*desc*>REFILL KIT, CHEMICAL AGENT AUTOMATIC ALARM, M229</*desc*><*cageno*>81361</*cageno*><*partno*>D5-15-4700</*partno*><*uoc*><*null*></*uoc*></*dcpno*>
<*um*>EA</*um*>
<*qty*>1</*qty*>
</*aal-entry*>
<*aal-entry id="NSN-5820-00-086-7651"*>
<*nsn*>5820-00-086-7651</*nsn*>
<*dcpno*><*desc*>ANTENNA, AT-784/PRC (SQD LDR ONLY) (INTERIOR-LEFT SPONSON)</*desc*><*cageno*>80058</*cageno*><*partno*>AT-784/PRC</*partno*><*uoc*>3A3</*uoc*></*dcpno*>
<*um*>EA</*um*>
<*qty*>1</*qty*>
</*aal-entry*>
<*aal-entry id="NSN-6650-00-530-0974"*>
<*nsn*>6650-00-530-0974</*nsn*>
<*dcpno*><*desc*>BINOCULAR, 7X50, M17A1 W/CASE (INTERIOR TURRET)</*desc*><*cageno*>19200</*cageno*><*partno*>6702518</*partno*><*uoc*><*null*></*uoc*></*dcpno*>
<*um*>EA</*um*>

*<qty>*1*</qty>*
</aal-entry>
<aal-entry id="NSN-6145-00-226-8812">
*<nsn>*6145-00-226-8812*</nsn>*
*<dcpno><desc>*CABLE, TELEPHONE, 2 CONDUCTOR, WD-1/TT, 1320 FT (1 EA PER VEH) (EXTERIOR
- LEFT SIDE BUSTLE BOX)*</desc><cageno>*81349*</cageno><partno>*WD-1/TT*</partno><uoc>*2A3*</uoc></dcpno>*
*<um>*EA*</um>*
*<qty>*1*</qty>*
</aal-entry>
<aal-entry>
<nsn></nsn>
*<dcpno><desc>*CARTRIDGE, 25MM, 300 READY ROUNDS, 1200 STOWAGE ROUNDS, 30 ROUNDS/CAN
CONSISTING OF ANY COMBINATION OF THE FOLLOWING TYPES: *<xref wpid="S00007-9-2350-284" pretext="SEE" posttext="FOR STOWAGE">*</desc> *<cageno><null></cageno><partno></partno><uoc>*3A3*</uoc></dcpno>*
*<um>*EA*</um>*
*<qty>*50*</qty>*
</aal-entry>
<aal-entry id="NSN-1305-01-092-0428">
*<nsn>*1305-01-092-0428*</nsn>*
*<dcpno><desc>*CARTRIDGE, 25MM, M791, APDS-T*</desc><cageno>*19200*</cageno><partno>*12556175*</partno><uoc>*3A3*</uoc></dcpno>*
<um></um>
<qty></qty>
</aal-entry>
<aal-entry id="NSN-1305-01-094-1035">
*<nsn>*1305-01-094-1035*</nsn>*
*<dcpno><desc>*CARTRIDGE, 25MM, M792, HEI-T*</desc><cageno>*19200*</cageno><partno>*12556178*</partno><uoc>*3A3*</uoc></dcpno>*
<um></um>
<qty></qty>
</aal-entry>
<aal-entry id="NSN-1305-01-092-0429">
*<nsn>*1305-01-092-0429*</nsn>*
*<dcpno><desc>*CARTRIDGE, 25MM, M793, TP-T*</desc><cageno>*19200*</cageno><partno>*12556181*</partno><uoc>*3A3*</uoc></dcpno>*
<um></um>
<qty></qty>
</aal-entry>
<aal-entry>

<nsn></nsn>
*<dcpno><desc>*CARTRIDGE, 25MM, 300 READY ROUNDS, (600 STOWAGE ROUNDS 30 ROUNDS/CAN
CONSISTING OF ANY COMBINATION OF THE FOLLOWING TYPES *<xref wpid="S00007-9-2350-284" pretext="SEE" posttext="FOR STOWAGE">.</desc><cageno><null></cageno><partno></partno><uoc>*2A3*</uoc></dcpno>*
*<um>*EA*</um>*
*<qty>*30*</qty>*
</aal-entry>
<aal-entry id="NSN-1305-00-926-3930">
*<nsn>*1305-00-926-3930*</nsn>*
*<dcpno><desc>*CARTRIDGE, 5.56MM, M193 BALL W/CLIPS, W/MAGAZINE FILLERS AND BANDOLIERS,
2 EA 840 ROUNDS/CAN*<xref wpid="S00007-9-2350-284" pretext="SEE" posttext="FOR STOWAGE">.*
*</desc><cageno>*19200*</cageno><partno>*10523632*</partno><uoc>*3A3*</uoc></dcpno>*
*<um>*EA*</um>*
*<qty>*2*</qty>*
</aal-entry>
<aal-entry>
<nsn></nsn>
*<dcpno><desc>*CARTRIDGE, 5.56MM, W/CLIPS, MAGAZINE FILLERS AND BANDOLIERS, 840 ROUNDS/CAN
IN ANY COMBINATION OF THE FOLLOWING TYPES:*<xref wpid="S00007-9-2350-284" pretext="SEE" posttext="FOR STOWAGE">.</desc><cageno><null></cageno><partno></partno><uoc>*2A3*</uoc></dcpno>*
*<um>*EA*</um>*
*<qty>*6*</qty>*
</aal-entry>
<aal-entry id="NSN-1305-00-926-3929">
*<nsn>*1305-00-926-3929*</nsn>*
*<dcpno><desc>*CARTRIDGE, 5.56MM, M196, TRACER (3 EA 840 RND CANS STOWED)*</desc><cageno>*19200*</cageno><partno>*10543193*</partno><uoc>*2A3*</uoc></dcpno>*
<um></um>
<qty></qty>
</aal-entry>
<aal-entry id="NSN-1305-00-892-2330">
*<nsn>*1305-00-892-2330*</nsn>*
*<dcpno><desc>*CARTRIDGE, 7.62MM, 200 ROUNDS/CAN *<xref wpid="S00007-9-2350-284" pretext="SEE" posttext="FOR STOWAGE">.</desc><cageno>*19200*</cageno><partno>*10521998*</partno><uoc>*2A3*</uoc></dcpno>*
*<um>*EA*</um>*

*<qty>*22*</qty>*
</aal-entry>
</aal>
</aalwp>

d. Formatted SGML document instance fragment for <*aalwp*>:

9-2350-294-10-1

COMPONENTS OF END ITEM AND BASIC ISSUE—Continued **0006 00**

COMPONENTS OF END ITEM (COEI) LIST

Table 1. Components of End Item List

(1) ILLUS NUMBER	(2) NATIONAL STOCK NUMBER	(3) DESCRIPTION,CAGEC,AND PART NUMBER	(4) USABLE ON CODE	(5) U/M	(6) QTY RQR
1	1005-01-086-1400	GUN, 25MM, M242 W/BII CONSISTING OF (INTERIOR) (1 EA BORE BRUSH, 1 EA CHAMBER BRUSH, 1 EA ASSEMBLY HAND CRANK, 1 EA PLUG, MUZZLE BRAKE, 1 EA PLUG, MUZZLE BRAKE): () 12524000		EA	1
	1005-01-121-2391	BRUSH, BORE, 25MM (TOOL BAG) (19200) 12524014		EA	1
	1005-01-121-2390	BRUSH, CHAMBER, 25MM (TOOL BAG) (19200) 12524013		EA	1
	N/A	CRANK ASSEMBLY, HAND (TOOL BAG) (19200) 12524519		EA	1
	1005-01-119-7865	ROD ASSEMBLY, CLEANING, 25MM CONSISTING OF (INTERIOR-TURRET) (1 EA ASSEMBLY HANDLE, 12524476 1 EA SECTION CLEANING ROD 12524481, 2 EA SECTION CLEANING ROD 12524482 (19200) 12524020			
	1005-01-120-0447	HANDLE, ASSEMBLY (19200) 12524476		EA	1
	1005-01-119-7866	ROD, SECTION, CLEANING (19200) 12524481		EA	1
	1005-01-119-7867	ROD, SECTION, CLEANING (19200) 12524482		EA	2
2	5340-01-318-0196	HANDLE, HYDRAULIC PUMP (INTE-RIOR) (19207) 12358449		EA	1
NI	N/A	INSTALLATION, HARNESS (INTERIOR) (80063) PPL-10350	3HS	EA	1
NI	5820-01-271-1588	INSTALLATION, HARNESS (INTERIOR) (80063) PPL-10349	2HS	EA	1
3	2510-01-120-2893	KIT, WINDSHIELD (INTERIOR, LEFT STOWAGE) (19207) 12298236		EA	1

0006 00-2

Figure 83 Sample <aalwp> FOSI Output

G.3.1.5.1 The element <***intro***> (see L.4.5.8) is the introductory paragraphs for AAL. The paragraph(s) may be entered using an entity reference (see A.3.5.2) when the text of the paragraph(s) contains the verbatim statement found in MIL-STD-40051.

G.3.1.5.2 The element <***aal***> is used for all additional authorization items contained in the additional authorization list. These items are required to operate the equipment but are not classified as COEI or BII items. This element functions as the table element. The element <***aal***> contains at least one category of AAL entries (<***category***> see G.3.1.4.1.1.1) or at least one AAL entry (<***aal-entry***>).

a. DTD fragment for <***aal***>:

```
<!ELEMENT aal - - (category+ | aal-entry+)>
<!ATTLIST aal
          %navlink;
          %refs;
          %secur;>
```

b. Attributes for <***aal***>:

1. **%NAVLINK;** - Refer to common parameter entities for a complete description (see L.5.8).
2. **%REFS;** - Refer to common parameter entities for a complete description (see L.5.2).
3. **%SECUR;** - Refer to common parameter entities for a complete description (see L.5.3).

G.3.1.5.2.1 The element <***aal-entry***> contains entries of an additional authorization list table. It is equivalent to a "row" element in a structural table.

a. DTD fragment for <***aal-entry***>:

```
<!ELEMENT aal-entry - o (nsn+, dcpno, um, qty)>
<!ATTLIST aal-entry
          %navlink;
          %refs;
          %secur;>
```

b. Attributes for <***aal-entry***>:

1. **%NAVLINK;** - Refer to common parameter entities for a complete description (see L.5.8).
2. **%REFS;** - Refer to common parameter entities for a complete description (see L.5.2).
3. **%SECUR;** - Refer to common parameter entities for a complete description (see L.5.3).

G.3.1.5.2.1.1 The element <***nsn***> (see L.4.5.12) is the NSN item and the information appears in the first column of AAL table.

G.3.1.5.2.1.2 The element <***dcpno***> (see G.3.1.4.1.1.2.3) is the description for the third and fourth column of the AAL table.

G.3.1.5.2.1.3 The element <***um***> (see G.3.1.4.1.1.2.4) is the unit of measure and appears in the the fifth column of the AAL table.

G.3.1.5.2.1.4 The element <***qty***> (see L.4.6.2.2.1.4) is recommended quantity and appears in the sixth column of the AAL table.

G.3.1.6 **Expendable and Durable Items List Work Package <*explistwp*>.** The expendable and durable items list work package <***explistwp***> contains a listing of all expendable and durable items required to operate and/or maintain the equipment. The element contains a work package title (<***title***> see L.4.1.5.1), an introduction to the work package (<***intro***> see L.4.5.8) (The paragraph(s) may be entered using an entity reference (see A.3.5.2) when the text of the paragraph(s) contains the verbatim statement found in MIL-STD-40051.), and expendable and durable items list (<***explist***>). Volume separation (***%vol.group;*** see L.3.5) may not occur within this element.

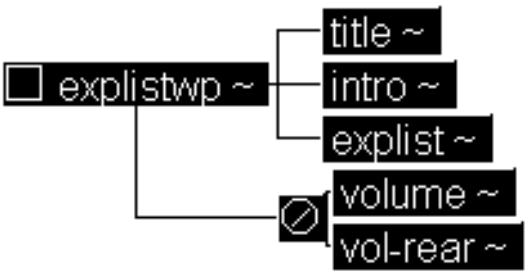

Figure 84 Expendable and Durable Items List Work Package DTD Hierarchy

a. DTD fragment for <***explistwp***>:

```
<!ELEMENT explistwp - - (title, intro, explist) -(%vol.group;)>
<!ATTLIST explistwp
          wpno          ID       #REQUIRED
          %tracking;
          %wpbodyatt;
          %secur;>
```

b. Attributes for <***explistwp***>:

1. **WPNO** - The unique number assigned to this work package by the original developer. This number remains the same when the work package is reused. The work package is referenced through an ID which is (#REQUIRED) and remains with the work package for the work package life. The FOSI generates the work package sequence number. Refer to MIL-STD-40051 Part 1 to obtain the work package number format.
2. **%TRACKING;** - Refer to common parameter entities for a complete description (see L.5.6).
3. **%WPBODYATT;** - Refer to common parameter entities for a complete description (see L.5.4).
4. **%SECUR;** - Refer to common parameter entities for a complete description (see L.5.3).

G.3.1.6.1 The element <***explist***> is used for the standard expendable and durable items table. All expendable and durable items are in alphabetical order by approved item name are listed. The element <***explist***> contains at least one category of expendable and durable entries (<***category***> see G.3.1.4.1.1.1) or at least one expendable and durable entry <***expdur-entry***>.

a. DTD fragment for <***explist***>:

```
<!ELEMENT explist - o (category+ | expdur-entry+)>
```

```
<!ATTLIST explist
          %navlink;
          %refs;
          %secur;>
```

b. Attributes for <***explist***>:

1. **%NAVLINK;** - Refer to common parameter entities for a complete description (see L.5.8).
2. **%REFS;** - Refer to common parameter entities for a complete description (see L.5.2).
3. **%SECUR;** - Refer to common parameter entities for a complete description (see L.5.3).

G.3.1.6.1.1 The element <***expdur-entry***> contains entries for an expendable and durable items list. It is equivalent to a "row" element in a structural table.

a. DTD fragment for <***expdur-entry***>:

```
<!ELEMENT expdur-entry - - (itemno, lvl, nsn, name, um)>
<!ATTLIST expdur-entry
          %navlink;
          %refs;
          %secur;>
```

b. Attributes for <***expdur-entry***>:

1. **%NAVLINK;** - Refer to common parameter entities for a complete description (see L.5.8).
2. **%REFS;** - Refer to common parameter entities for a complete description (see L.5.2).
3. **%SECUR;** - Refer to common parameter entities for a complete description (see L.5.3).

G.3.1.6.1.1.1 The element <***itemno***> is the number assigned to the entry which is entered in the first column of the expendable and durable items list. The element contains inline text (***%text;*** see L.3.6)

a. DTD fragment for <***itemno***>:

```
<!ELEMENT itemno - - (%text;)>
<!ATTLIST itemno
            %refs;
            %secur;>
```

b. Attributes for <***itemno***>:

1. **%REFS;** - Refer to common parameter entities for a complete description (see L.5.2).
2. **%SECUR;** - Refer to common parameter entities for a complete description (see L.5.3).

G.3.1.6.1.1.2 The element <***lvl***> contains the lowest level of maintenance that requires the listed item which is entered in the second column of the expendable and durable items list. The available maintenance level codes are: “C”- Operator/Crew, “O”- Unit/AVUM, “F”- Direct Support/AVIM, “H”- General Support and “D”- Depot. The element <***lvl***> contains the parameter entity ***%text;*** (see L.3.6).

a. DTD fragment for <***lvl***>:

```
<!ELEMENT lvl - o (%text;)>
```

```
<!ATTLIST lvl
          %refs;
          %secur;>
```

b. Attributes for <***kvl***>:

1. **%REFS;** - Refer to common parameter entities for a complete description (see L.5.2).
2. **%SECUR;** - Refer to common parameter entities for a complete description (see L.5.3).

G.3.1.6.1.1.3 The element <***nsn***> (see L.4.5.12) is the applicable NSN for the item and appears in the third column of the expendable and durable list.

G.3.1.6.1.1.4 The element <***name***> (see L.4.5.11) is the item name, CAGENO, and part number, and appears in the fourth column in the expendable and durable list.

G.3.1.6.1.1.5 The element <***um***> (see G.3.1.4.1.1.2.4) is the unit of measure and appears in the fifth column in the expendable and durable list.

G.3.1.7 **Stowage and Decal/Data Plate Guide Work Package <*stowagewp*>.** The stowage and decal/data plate guide work package <***stowagewp***> lists and illustrates the location of all applicable COEI, BII, AAL items, decals and data plates. This work package is for operator equipment manuals only. The element contains a work package title (<***title***> see L.4.1.5.1), illustration(s) detailing the location of COEI, BII and AAL items (<***stowinfo***>), and optional illustration(s) detailing the location of all decals and data plates (<***decalinfo***>). Volume separation (***%vol.group;*** see L.3.5) may not occur within this element.

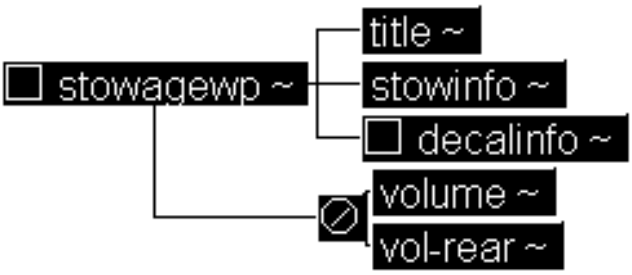

Figure 85 Stowage and Decal/Data Plate Guide Work Package DTD Hierarchy

a. DTD fragments for <***stowagewp***>:

```
<!ELEMENT stowagewp - - (title, stowinfo, decalinfo?) -(%vol.group;)>
<!ATTLIST stowagewp
          wpno            ID       #REQUIRED
          %navlink;
          %tracking;
          %wpbodyatt;
          %secur;>
```

b. Attributes for <***stowagewp***>:

1. **WPNO** - The unique number assigned to this work package by the original developer. This number remains the same when the work package is reused. The work package is referenced through an ID which is (#REQUIRED) and remains with the work package for

the work package life. The FOSI generates the work package sequence number. Refer to MIL-STD-40051 Part 1 to obtain the work package number format.

2. **%NAVLINK;** - Refer to common parameter entities for a complete description (see L.5.8).
3. **%TRACKING;** - Refer to common parameter entities for a complete description (see L.5.6).
4. **%WPBODYATT;** - Refer to common parameter entities for a complete description (see L.5.4).
5. **%SECUR;** - Refer to common parameter entities for a complete description (see L.5.3).

G.3.1.7.1 The element <***stowinfo***> contains introductory information (<***intro***> see L.4.5.8) followed by at least one illustration (<***figure***> see L.4.4.1) that detail the location of applicable COEI, BII, and AAL items that must be prepared for the work package.

a. DTD fragments for <***stowinfo***> and <***decalinfo***>:

```
<!ELEMENT (stowinfo |
           decalinfo) - - (intro, figure+)>
<!ATTLIST (stowinfo |
           decalinfo)
           %navlink;
           %refs;
           %secur;>
```

b. Attributes for <***stowinfo***> and <***decalinfo***>:

1. **%NAVLINK;** - Refer to common parameter entities for a complete description (see L.5.8).
2. **%REFS;** - Refer to common parameter entities for a complete description (see L.5.2).
3. **%SECUR;** - Refer to common parameter entities for a complete description (see L.5.3).

G.3.1.7.2 The element <***decalinfo***> contains introductory information (<***intro***> see L.4.5.8) followed by at least one illustration (<***figure***> see L.4.4.1) that detail the location of all decals and data plates in and on the equipment.

a. The DTD fragment for <***decalinfo***>: See G.3.1.7.1 a.

b. The attributes for <***decalinfo***>: See G.3.1.7.1 b.

G.3.1.8 **On-Vehicle Equipment Loading Plan Work Package <*eqploadwp*>.** The on-vehicle equipment loading plan work package <***eqploadwp***> contains a loading plan that must be prepared by the technical equipment manual developer. The element contains a work package title (<***title***> see L.4.1.5.1), an introductory section (<***intro***> see L.4.5.8), and the illustrated loading plan list (<***loaddesc***>). Volume separation (***%vol.group;*** see L.3.5) may not occur within this element.

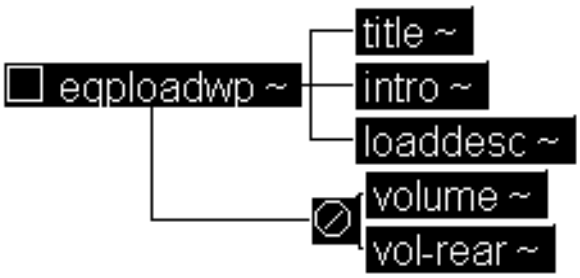

Figure 86 On-Vehicle Equipment Loading Plan Work Package DTD Hierarchy

a. DTD fragment for <***eqploadwp***>:

```
<!ELEMENT eqploadwp - - (title, intro, loaddesc)  -(%vol.group;)>
<!ATTLIST eqploadwp
          wpno            ID       #REQUIRED
          %navlink;
          %tracking;
          %wpbodyatt;
          %secur;>
```

b. Attributes for <***eqploadwp***>:

1. **WPNO** - The unique number assigned to this work package by the original developer. This number remains the same when the work package is reused. The work package is referenced through an ID which is (#REQUIRED) and remains with the work package for the work package life. The FOSI generates the work package sequence number. Refer to MIL-STD-40051 Part 1 to obtain the work package number format.
2. **%NAVLINK;** - Refer to common parameter entities for a complete description (see L.5.8).
3. **%TRACKING;** - Refer to common parameter entities for a complete description (see L.5.6).
4. **%WPBODYATT;** - Refer to common parameter entities for a complete description (see L.5.4).
5. **%SECUR;** - Refer to common parameter entities for a complete description (see L.5.3).

G.3.1.8.1 The element <***loaddesc***> identifies a description of equipment loading, including illustrations of the end item with equipment locations and a standard load list table. The element <***loaddesc***> contains a required title (<***title***> see L.4.1.5.1), followed by at least one figure (<***figure***> see L.4.4.1), each of which must be followed by a loading list (<***loadlist***>).

a. DTD fragment for <***loaddesc***>:

```
<!ELEMENT loaddesc - o (title, (figure, loadlist)+)>
<!ATTLIST loaddesc
          type      (tac | notac)  #REQUIRED
          %navlink;
          %refs;
          %secur;>
```

b. Attributes for <***loaddesc***>:

1. **TYPE** - Specifies the type of loading plan.
   (a) “TAC” - Specifies the list is tactical.
   (b) “NONTAC” - Specifies the list is non-tactical.
2. **%NAVLINK;** - Refer to common parameter entities for a complete description (see L.5.8).
3. **%REFS;** - Refer to common parameter entities for a complete description (see L.5.2).
4. **%SECUR;** - Refer to common parameter entities for a complete description (see L.5.3).

G.3.1.8.1.1 The element <***loadlist***> contains a standard loading list table that lists all applicable equipment by illustration identification number (<***callout***> see L.4.1.3.2) and item name (<***item***> see L.4.1.2.1.1). The list must be on the same page or adjacent to the illustration.

a. DTD fragment for <***loadlist***>:

```
<!ELEMENT loadlist - o (callout, item)+>
<!ATTLIST loadlist
          %refs;
          %secur;>
```

b. Attributes for <***loadlist***>:

1. **%REFS;** - Refer to common parameter entities for a complete description (see L.5.2).
2. **%SECUR;** - Refer to common parameter entities for a complete description (see L.5.3).

G.3.1.9 **Tool Identification List Work Package <*toolidwp*>.** The tool identification work package <***toolidwp***> lists all common tools and supplements and special tools/fixtures needed to maintain equipment. The element contains a work package title (<***title***> see L.4.1.5.1), an introductory section (<***intro***> see L.4.5.8), and a tabular listing of all tools required by the technical equipment manual (-20/AVUM level or above) (<***toolidlist***> or <***avtoolidlist***>). Volume separation (***%vol.group;*** see L.3.5) may not occur within this element.

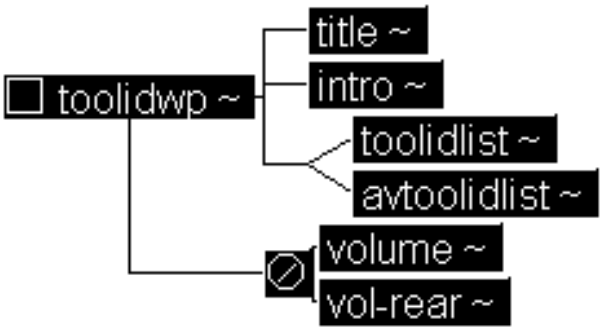

Figure 87 Tool Identification List Work Package DTD Hierarchy

a. DTD fragment for <***toolidwp***>:

```
<!ELEMENT toolidwp - o (title, intro (toolidlist | avtoolidlist)
                        -(%vol.group;)>
<!ATTLIST toolidwp
          wpno       ID    #REQUIRED
          %navlink;
          %tracking
          %wpbodyatt;
          %secur;>
```

b. Attributes for <***toolidwp***>:

1. **WPNO** - The unique number assigned to this work package by the original developer. This number remains the same when the work package is reused. The work package is referenced through an ID which is (#REQUIRED) and remains with the work package for the work package life. The FOSI generates the work package sequence number. Refer to MIL-STD-40051 Part 1 to obtain the work package number format.
2. **%NAVLINK;** - Refer to common parameter entities for a complete description (see L.5.8).

3. **%TRACKING;** - Refer to common parameter entities for a complete description (see L.5.6).
4. **%WPBODYATT;** - Refer to common parameter entities for a complete description (see L.5.4).
5. **%SECUR;** - Refer to common parameter entities for a complete description (see L.5.3).

G.3.1.9.1 The element <***toolidlist***> is a standard tool identification list and includes a tabular listing of all tools required by the initial setup requirements of any procedure in the technical manual. The element <***toolidlist***> contains at least one category of tool entries (<***category***> see G.3.1.4.1.1.1) or at least one tool entry <***tool-entry***> which may be followed by notes (<***tblnotes***>).

a. DTD fragment for <***toolidlist***>:

```
<!ELEMENT toolidlist - o ((category+ | tool-entry+), tblnotes*)>
<!ATTLIST toolidlist
          %navlink;
          %refs;
          %secur;>
```

b. Attributes for <***toolidlist***>:

1. **%NAVLINK;** - Refer to common parameter entities for a complete description (see L.5.8).
2. **%REFS;** - Refer to common parameter entities for a complete description (see L.5.2).
3. **%SECUR;** - Refer to common parameter entities for a complete description (see L.5.3).

G.3.1.9.1.1 The element <***tool-entry***> contains entries of a tool identification list table. It is equivalent to a "row" element in a structural table.

a. DTD fragment for <***tool-entry***>:

```
<!ELEMENT tool-entry - o (itemno, name, nsn, partno+, remarkcol)>
<!ATTLIST tool-entry
          %navlink;
          %refs;
          %secur;>
```

b. Attributes for <***tool-entry***>:

1. **%NAVLINK;** - Refer to common parameter entities for a complete description (see L.5.8).
2. **%REFS;** - Refer to common parameter entities for a complete description (see L.5.2).
3. **%SECUR;** - Refer to common parameter entities for a complete description (see L.5.3).

G.3.1.9.1.1.1 The element <***itemno***> (see G.3.1.6.1.1.1) is the number assigned to the entry which is entered in the first column of the tool identification list. It is referenced in the initial setup to identify the item.

G.3.1.9.1.1.2 The element <***name***> (see L.4.5.11) is the tool name or description which is entered in the second column of the tool identification list.

G.3.1.9.1.1.3 The element <***nsn***> (see L.4.5.12) is the tool NSN which is entered in the third column of the tool identification list.

G.3.1.9.1.1.4 The element <***partno***> (see L.4.5.13) is the tool part number which is entered in the fourth column of the tool identification list.

G.3.1.9.1.1.5 The element <***remarkcol***> contains any remarks (<***remarks***> see G.3.1.2.5.2), external document references (<***extref***> see L.4.1.3.3) or tool note reference (<***tblnoteref***>) in the fifth column of the tool identification list.

a. DTD fragment for <***remarkcol***>:

```
<!ELEMENT remarkcol - o (extref | tblnoteref | remarks)>
<!ATTLIST remarkcol
          %refs;
          %secur;>
```

b. Attributes for <***remarkcol***>:

1. **%REFS;** - Refer to common parameter entities for a complete description (see L.5.2).
2. **%SECUR;** - Refer to common parameter entities for a complete description (see L.5.3).

G.3.1.9.1.1.5.1 The element <***tblnoteref***> contains a reference to a table note and is included in the fifth column of the tool identification list.

a. DTD fragment for <***tblnoteref***>:

```
<!ELEMENT tblnoteref - o EMPTY>
<!ATTLIST tblnoteref
          noteref    IDREFS    #REQUIRED>
```

b. Attributes for <***tblnoteref***>:

1. **NOTEREF** - Enter the ID value of the item to be referenced in the tool notes.

G.3.1.9.1.2 The element <***tblnotes***> acts as a footnote reference within the tool identifier table. The element <***tblnotes***> contains at least one paragraph (<***para***> see L.4.1.5.3).

a. DTD fragment for <***tblnotes***>:

```
<!ELEMENT tblnotes - o (para+)>
<!ATTLIST tblnotes
          id   ID  #REQUIRED>
```

b. Attributes for <***tblnotes***>:

1. **ID** - The ID value of the table note to be referenced by the tool entry.

G.3.1.9.2 The element <***avtoolidlist***> is a standard aviation tool identification list and includes a tabular listing of all tools required by the initial setup requirements of all procedures in the technical manual. The element contains at least one category of aviation tool entries (<***category***> see G.3.1.4.1.1.1) or at least one aviation tool entry (<***avtool-entry***>) which may be followed by tool notes (<***tblnotes***> see G.3.1.9.1.2).

G.3.1.9.2.1 The element <***avtool-entry***> contains entries for an aviation tool identification list table. It is equivalent to a "row" element in a structural table.

a. DTD fragment for <***avtool-entry***>:

```
<!ELEMENT avtool-entry - o (itemno, name, nsn, partno+, qty,
```

```
                                remarkcol)>
<!ATTLIST avtool-entry
          %navlink;
          %refs;
          %secur;>
```

b. Attributes for <***avtool-entry***>:

1. **%NAVLINK;** - Refer to common parameter entities for a complete description (see L.5.8).
2. **%REFS;** - Refer to common parameter entities for a complete description (see L.5.2).
3. **%SECUR;** - Refer to common parameter entities for a complete description (see L.5.3).

G.3.1.9.2.1.1 The element <***itemno***> (see G.3.1.6.1.1.1) is the number assigned to the entry which is entered in the first column of the aviation tool identification list. It is referenced in the initial setup to identify the item.

G.3.1.9.2.1.2 The element <***name***> (see L.4.5.11) is the tool name or description which is entered in the second column of the aviation tool identification list.

G.3.1.9.2.1.3 The element <***nsn***> (see L.4.5.12) is the tool NSN which is entered in the third column of the aviation tool identification list.

G.3.1.9.2.1.4 The element <***partno***> (see L.4.5.13)is the tool part number which is entered in the fourth column of the aviation tool identification list.

G.3.1.9.2.1.5 The element <***qty***> (see L.4.6.2.2.1.4) is the required quantity which is entered in the fifth column in the aviation tool identification list.

G.3.1.9.2.1.6 The element <***remarkcol***> (see G.3.1.9.1.1.5) contains any remarks (<***remarks***> see G.3.1.2.5.2), external document references (<***extref***> see L.4.1.3.3) or tool note reference (<***tblnoteref***>) in the sixth column of the aviation tool identification list.

G.3.1.9.2.2 The element <***tblnotes***> (see G.3.1.9.1.2) acts as a footnote reference within the tool identifier table.

G.3.1.10 **Illustrated list of Manufactured Items Work Package <*manuwp*>.** The manufactured items work package <***manuwp***>contains technical information for each item authorized to be manufactured or fabricated by maintenance level. The element contains a work package title (<***title***> see L.4.1.5.1), an introductory section (<***intro***> see L.4.5.8), an index of the manufactured items (<***manuindx***>), and illustrations (<***figure***> see L.4.4.1) with materials list and text instructions for all manufactured items. Volume separation (***%vol.group;*** see L.3.5) may not occur within this element. This work package is for -20/AVUM level or above technical equipment manuals.

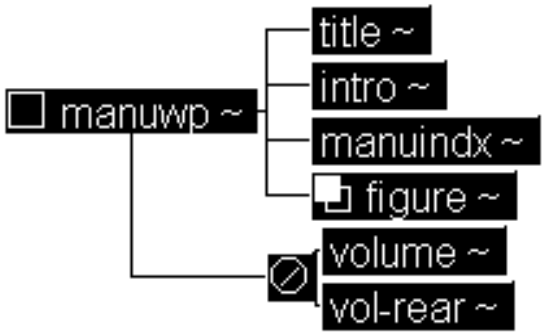

Figure 88 Illustrated list of Manufactured Items Work Package DTD Hierarchy

a. DTD fragment for <***manuwp***>:

```
<!ELEMENT manuwp - - (title, intro, manuindx, figure+)  -(%vol.group;)>
<!ATTLIST manuwp
          wpno            ID       #REQUIRED
          %navlink;
          %tracking;
          %wpbodyatt;
          %secur;>
```

b. Attributes for <***manuwp***>:

1. **WPNO** - The unique number assigned to this work package by the original developer. This number remains the same when the work package is reused. The work package is referenced through an ID which is (#REQUIRED) and remains with the work package for the work package life. The FOSI generates the work package sequence number. Refer to MIL-STD-40051 Part 1 to obtain the work package number format.
2. **%NAVLINK;** - Refer to common parameter entities for a complete description (see L.5.8).
3. **%TRACKING;** - Refer to common parameter entities for a complete description (see L.5.6).
4. **%WPBODYATT;** - Refer to common parameter entities for a complete description (see L.5.4).
5. **%SECUR;** - Refer to common parameter entities for a complete description (see L.5.3).

G.3.1.10.1 The element <***manuindx***> is used for Illustrated List of Manufactured Items Index (-20 AVUM Level or Above). The manufactured items index <***manuindx***> contains a list of all manufactured items by either a part number (<***partno***> see L.4.5.13) or a drawing number (<***dwgno***> see L.4.5.5) and an optional manufacture item name (<***name***> see L.4.5.11) followed by an optional illustration's figure (<***figno***> see G.3.1.10.1.2) and table number (<***tblno***> see G.3.1.10.1.3) for each item.

a. DTD fragment for <***manuindx***>:

```
<!ELEMENT manuindx - - (partdesc, figno?, tblno?)>
<!ATTLIST manuindx
          %bodyatt;
          %secur;>
```

b. Attributes for <***manuindx***>:

1. **%BODYATT;** - Refer to common parameter entities for a complete description (see L.5.1).
2. **%SECUR;** - Refer to common parameter entities for a complete description (see L.5.3).

G.3.1.10.1.1 The element <***partdesc***> contains the manufactured part description which includes either the part number (<***partno***> see L.4.5.13) and an optional name of the item (<***name***> see L.4.5.11) or the drawing number (<***dwgno***> see L.4.5.5) and optional name of the item (<***name***> see L.4.5.11).

a. DTD fragment for <***partdesc***>:

```
<!ELEMENT partdesc - - ((partno | dwgno) , name?)>
<!ATTLIST partdesc
```

```
%bodyatt;
%secur;>
```

b. Attributes for <***partdesc***>:

1. **%BODYATT;** - Refer to common parameter entities for a complete description (see L.5.1).
2. **%SECUR;** - Refer to common parameter entities for a complete description (see L.5.3).

G.3.1.10.1.2 The element <***figno***> contains the reference to the applicable figure.

a. DTD fragment for <***figno***> and <***tblno***>:

```
<!ELEMENT (figno | tblno) - o EMPTY>
<!ATTLIST (figno | tblno)
          idref   IDREF   #REQUIRED>
```

b. Attributes for <***figno***> and <***tblno***>:

1. **IDREF** - References the identifier of the figure or table bearing the figure or table number.

G.3.1.10.1.3 The element <***tblno***> contains the reference to the applicable table.

a. The DTD fragment of <***tblno***>: See G.3.1.10.1.2 a.

b. The attributes of <***tblno***>: See G.3.1.10.1.2b.

G.3.1.11 **Torque Limits Work Package <*torquewp*>.** The torque limits work package <***torquewp***> provides the applicable torque values data to the specific torque sequencing requirements. The element contains a work package title (<***title***> see L.4.1.5.1), an introductory section (<***intro***> see L.4.5.8) and torque values (<***torqueval***>). Volume separation (***%vol.group;*** see L.3.5) may not occur within this element. This work package is for -20 or AVUM and above level technical equipment manuals.

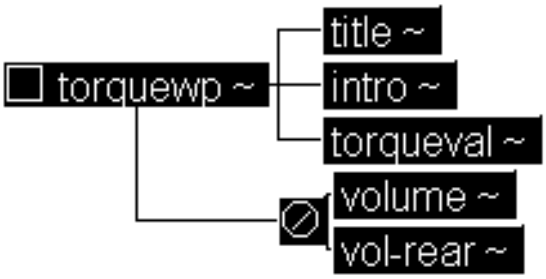

Figure 89 Torque Limits Work Package DTD Hierarchy

a. DTD fragment for <***torquewp***>:

```
<!ELEMENT torquewp - - (title, intro, torqueval)  -(%vol.group;)>
<!ATTLIST torquewp
          wpno      ID    #REQUIRED
          %navlink;
          %tracking;
          %wpbodyatt;
```

```
%secur;>
```

b. Attributes for <***torquewp***>:

1. **WPNO** - The unique number assigned to this work package by the original developer. This number remains the same when the work package is reused. The work package is referenced through an ID which is (#REQUIRED) and remains with the work package for the work package life. The FOSI generates the work package sequence number. Refer to MIL-STD-40051 Part 1 to obtain the work package number format.
2. **%NAVLINK;** - Refer to common parameter entities for a complete description (see L.5.8).
3. **%TRACKING;** - Refer to common parameter entities for a complete description (see L.5.6).
4. **%WPBODYATT;** - Refer to common parameter entities for a complete description (see L.5.4).
5. **%SECUR;** - Refer to common parameter entities for a complete description (see L.5.3).

G.3.1.11.1 The element <***torqueval***> identifies torque values which will be expressed in lb-ft or lb-in. terms. The element <***torqueval***> contains an optional title (<***title***> see L.4.1.5.1) followed by paragraphs (<***para***> see L.4.1.5.3), procedures (<***proc***> see L.4.1.8.1), and/or paragraphs with required alert notices (<***specpara***> see L.4.1.1.1).

a. DTD fragment for <***torqueval***>:

```
<!ELEMENT torqueval - - (title?, (para | proc | specpara)+)>
<!ATTLIST torqueval
          %refs;
          %secur;>
```

b. Attributes for <***torqueval***>:

1. **%REFS;** - Refer to common parameter entities for a complete description (see L.5.2).
2. **%SECUR;** - Refer to common parameter entities for a complete description (see L.5.3).

G.3.1.12 **Mandatory Replacement Parts List Work Package <*mrplwp*>.** The mandatory replacement parts list work package <***mrplwp***> contains a list of all mandatory replacement parts referenced in the task initial setups and procedures. The element contains a work package title (<***title***> see L.4.1.5.1), an introductory section (<***intro***> see L.4.5.8) and mandatory replacement parts list (<***mrpl***>). Volume separation (***%vol.group;*** see L.3.5) may not occur within this element.

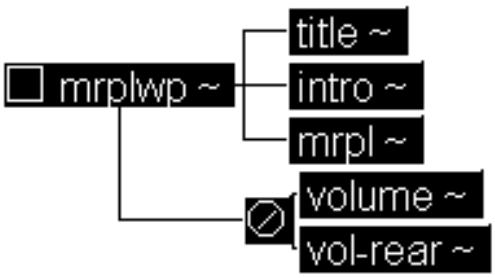

Figure 90 Mandatory Replacement Parts List Work Package DTD Hierarchy

a. DTD fragment for <***mrplwp***>:

```
<!ELEMENT mrplwp - - (title, intro, mrpl) -(%vol.group;)>
<!ATTLIST mrplwp
          wpno            ID       #REQUIRED
          %navlink;
          %tracking;
          %wpbodyatt;
          %secur;>
```

b. Attributes for <***mrplwp***>:

1. **WPNO** - The unique number assigned to this work package by the original developer. This number remains the same when the work package is reused. The work package is referenced through an ID which is (#REQUIRED) and remains with the work package for the work package life. The FOSI generates the work package sequence number. Refer to MIL-STD-40051 Part 1 to obtain the work package number format.
2. **%NAVLINK;** - Refer to common parameter entities for a complete description (see L.5.8).
3. **%TRACKING;** - Refer to common parameter entities for a complete description (see L.5.6).
4. **%WPBODYATT;** - Refer to common parameter entities for a complete description (see L.5.4).
5. **%SECUR;** - Refer to common parameter entities for a complete description (see L.5.3).

G.3.1.12.1 The element <***mrpl***> lists all mandatory replacement parts referenced in the initial setups of maintenance work packages. The element <***mrpl***> contains at least one category of MRPL entries (<***category***> see G.3.1.4.1.1.1) or at least one MRPL entry (<***mrpl-entry***>).

a. DTD fragment for <***mrpl***>:

```
<!ELEMENT mrpl - o (category+ | mrpl-entry+)>
<!ATTLIST mrpl
          %navlink;
          %refs;
          %secur;>
```

b. Attributes for <***mrpl***>:

1. **%NAVLINK;** - Refer to common parameter entities for a complete description (see L.5.8).
2. **%REFS;** - Refer to common parameter entities for a complete description (see L.5.2).
3. **%SECUR;** - Refer to common parameter entities for a complete description (see L.5.3).

G.3.1.12.1.1 The element <***mrpl-entry***> contains the entries for a standard mandatory replacement parts list. It is equivalent to a "row" element in a structural table.

a. DTD fragment for <***mrpl-entry***>:

```
<!ELEMENT mrpl-entry - o (itemno, partno, nsn, name, qty)>
<!ATTLIST mrpl-entry
          %navlink;
```

```
%refs;
%secur;>
```

b. Attributes for <***mrpl-entry***>:

1. **%NAVLINK;** - Refer to common parameter entities for a complete description (see L.5.8).
2. **%REFS;** - Refer to common parameter entities for a complete description (see L.5.2).
3. **%SECUR;** - Refer to common parameter entities for a complete description (see L.5.3).

G.3.1.12.1.1.1 The element <***itemno***> (see G.3.1.6.1.1.1) is the number assigned to the MRPL which is entered in the first column of the standard mandatory replacement parts list. It is referenced in the initial setup to identify the item.

G.3.1.12.1.1.2 The element <***partno***> (see L.4.5.13) is the MRPL part number which is entered in the second column of the standard mandatory replacement parts list.

G.3.1.12.1.1.3 The element <***nsn***> (see L.4.5.12) is the MRPL NSN which is entered in the third column of the standard mandatory replacement parts list.

G.3.1.12.1.1.4 The element <***name***> (see L.4.5.11) is the MRPL item name which is entered in the fourth column of the standard mandatory replacement parts list.

G.3.1.12.1.1.5 The element <***qty***> (see L.4.6.2.2.1.4) is the MRPL required quantity which is entered in the fifth column of the standard mandatory replacement parts list.

G.3.1.13 **Ammunition Work Package <*ammowp*>.** The element <***ammowp***> (see E.3.3) is described in complete detail in the Maintenance Information Chapter.

G.3.1.14 **Foreign Ammunition (NATO) Work Package <*natowp*>.** The foreign ammunition work package <***natowp***> contains the special requirements for foreign (NATO) ammunition marking, classification, identification, handling, transportation, preparation for firing and other similar data. The element contains a work package title (<***title***> see L.4.1.5.1) and NATO ammunition paragraphs of text that may be grouped into sections or subsections (***%titldtext;*** see L.3.3). Volume separation (***%vol.group;*** see L.3.5) may not occur within this element.

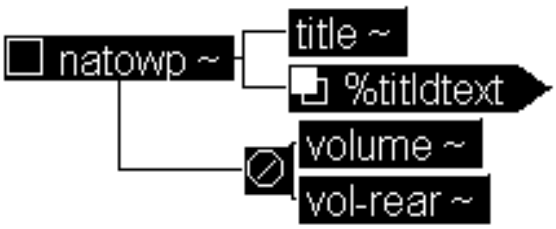

Figure 91 Foreign Ammunition (NATO) Work Package DTD Hierarchy

a. DTD fragment for <***natowp***>:

```
<!ELEMENT natowp - - (title, (%titldtext;)+) -(%vol.group;)>
<!ATTLIST natowp
          wpno            ID       #REQUIRED
          %navlink;
          %tracking;
```

```
%wpbodyatt;
%secur;>
```

b. Attributes for <***natowp***>:

1. **WPNO** - The unique number assigned to this work package by the original developer. This number remains the same when the work package is reused. The work package is referenced through an ID which is (#REQUIRED) and remains with the work package for the work package life. The FOSI generates the work package sequence number. Refer to MIL-STD-40051 Part 1 to obtain the work package number format.
2. **%NAVLINK;** - Refer to common parameter entities for a complete description (see L.5.8).
3. **%TRACKING;** - Refer to common parameter entities for a complete description (see L.5.6).
4. **%WPBODYATT;** - Refer to common parameter entities for a complete description (see L.5.4).
5. **%SECUR;** - Refer to common parameter entities for a complete description (see L.5.3).

G.3.1.15 **Inventory Work Package <*inventorywp*>.** The inventory work package <***inventorywp***> contains information on standard inventory procedures to determine inventoriable items. The element contains a work package title (<***title***> see L.4.1.5.1), an introductory section (<***intro***> see L.4.5.8), a security classification notice (<***security***>), inventoriable items (<***inventoriable***>), and periods of inventory (<***prdinv***>). Volume separation (***%vol.group;*** see L.3.5) may not occur within this element.

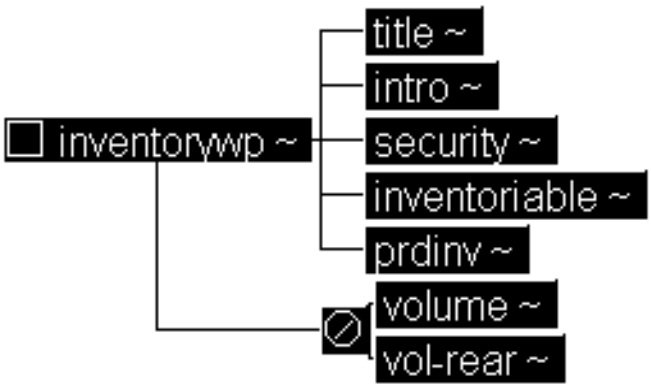

Figure 92 Inventory Work Package DTD Hierarchy

a. DTD fragment for <***inventorywp***>:

```
<!ELEMENT inventorywp - - (title, intro, security, inventoriable,
                           prdinv) -(%vol.group;)>
<!ATTLIST inventorywp
          wpno     ID     #REQUIRED
          %navlink;
          %tracking;
          %wpbodyatt;
          %secur;>
```

b. Attributes for <***inventorywp***>:

1. **WPNO** - The unique number assigned to this work package by the original developer. This number remains the same when the work package is reused. The work package is referenced through an ID which is (#REQUIRED) and remains with the work package for the work package life. The FOSI generates the work package sequence number. Refer to MIL-STD-40051 Part 1 to obtain the work package number format.
2. **%NAVLINK;** - Refer to common parameter entities for a complete description (see L.5.8).
3. **%TRACKING;** - Refer to common parameter entities for a complete description (see L.5.6).
4. **%WPBODYATT;** - Refer to common parameter entities for a complete description (see L.5.4).
5. **%SECUR;** - Refer to common parameter entities for a complete description (see L.5.3).

G.3.1.15.1 The element <***security***> security statement explains the classification of the aircraft inventory master guide data. The element <***security***> contains paragraphs of text that may be grouped into sections or subsections (***%titldtext;*** see L.3.3).

a. DTD fragment for <***security***>:

```
<!ELEMENT security - o (%titldtext;)>
<!ATTLIST security
          %refs;
          %secur;>
```

b. Attributes for <***security***>:

1. **%REFS;** - Refer to common parameter entities for a complete description (see L.5.2).
2. **%SECUR;** - Refer to common parameter entities for a complete description (see L.5.3).

G.3.1.15.2 The element <***inventoriable***> is the criteria used to define inventoriable items. This includes all items without regard to the source or ownership. Inventoriable items information is also used as source data for DA Form 2408-17. The element <***inventoriable***> contains paragraphs of text that may be grouped into sections or subsections (***%titldtext;*** see L.3.3).

a. DTD fragment for <***inventoriable***>:

```
<!ELEMENT inventoriable - o (%titldtext;)>
<!ATTLIST inventoriable
          %refs;
          %secur;>
```

b. Attributes for <***inventoriable***>:

1. **%REFS;** - Refer to common parameter entities for a complete description (see L.5.2).
2. **%SECUR;** - Refer to common parameter entities for a complete description (see L.5.3).

G.3.1.15.3 The element <***prdinv***> identifies periods of inventories which are normally performed upon receipt, transfer, or every 12 months are contained within this element. The element <***prdinv***> contains the paragraphs of text that may be grouped into sections or subsections (***%titldtext;*** see L.3.3). The paragraph(s) may be entered using an entity reference (see A.3.5.2) when the text of the paragraph(s) contains the verbatim statement found in MIL-STD-40051.

a. DTD fragment for <***prdinv***>:

```
<!ELEMENT prdinv - o (%titldtext;)>
<!ATTLIST prdinv
          %refs;
          %secur;>
```

b. Attributes for <***prdinv***>:

1. **%REFS;** - Refer to common parameter entities for a complete description (see L.5.2).
2. **%SECUR;** - Refer to common parameter entities for a complete description (see L.5.3).

G.3.1.16 **Storage of Aircraft Work Package <*storagewp*>.** The storage of aircraft work package <***storagewp***> describes each category of aircraft storage and removal from storage. The element contains a work package title (<***title***> see L.4.1.5.1), a general information section (<***geninfo***> see L.4.5.7), and the types of aircraft storage (<***flyable***>, <***short***> and <***intermediate***>). Volume separation (***%vol.group;*** see L.3.5) may not occur within this element.This work package is for aircraft only.

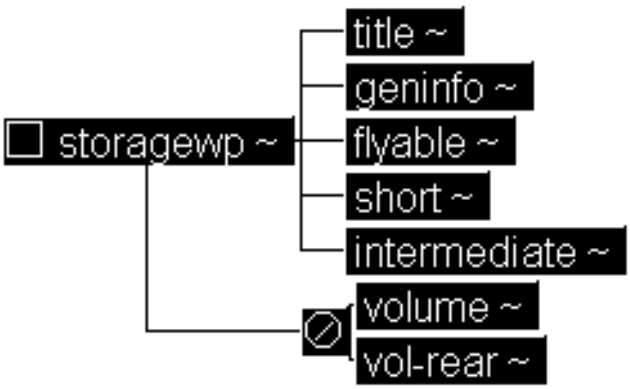

Figure 93 Storage of Aircraft Work Package DTD Hierarchy

a. DTD fragment for <***storagewp***>:

```
<!ELEMENT storagewp - - (title, geninfo, flyable, short, intermediate)
                        -(%vol.group;)>
<!ATTLIST storagewp
          wpno         ID       #REQUIRED
          %navlink;
          %tracking;
          %wpbodyatt;
          %secur;>
```

b. Attributes for <***storagewp***>:

1. **WPNO** - The unique number assigned to this work package by the original developer. This number remains the same when the work package is reused. The work package is referenced through an ID which is (#REQUIRED) and remains with the work package for the work package life. The FOSI generates the work package sequence number. Refer to MIL-STD-40051 Part 1 to obtain the work package number format.

2. **%NAVLINK;** - Refer to common parameter entities for a complete description (see L.5.8).
3. **%TRACKING;** - Refer to common parameter entities for a complete description (see L.5.6).
4. **%WPBODYATT;** - Refer to common parameter entities for a complete description (see L.5.4).
5. **%SECUR;** - Refer to common parameter entities for a complete description (see L.5.3).

G.3.1.16.1 The element <***flyable***> is used for procedures for flyable storage of aircraft. The element <***flyable***> contains an optional title (<***title***> see L.4.1.5.1), followed by an optional procedure summary (<***wpsum***> see L.4.6.1) and initial setup information (<***wpinfo***> see L.4.6.2), followed by either paragraph(s) (<***para***> see L.4.1.5.3), procedure(s) (<***proc***> see L.4.1.8.1), and/or paragraph(s) with required alert notices (<***specpara***> see L.4.1.1.1).

a. DTD fragment for <***flyable***>, <***short***>, and <***intermediate***>:

```
<!ELEMENT (flyable |
           short |
           intermediate) - o (title?, (wpsum, wpinfo)?, (para | proc | specpara)+)+>
<!ATTLIST (flyable |
           short |
           intermediate)
           %refs;
           %secur;>
```

b. Attributes for <***flyable***>, <***short***>, and <***intermediate***>:

1. **%REFS;** - Refer to common parameter entities for a complete description (see L.5.2).
2. **%SECUR;** - Refer to common parameter entities for a complete description (see L.5.3).

G.3.1.16.2 The element <***short***> is used for criteria for short length storage of aircraft. The element <***short***> contains an optional title (<***title***> see L.4.1.5.1), followed by an optional procedure summary (<***wpsum***> see L.4.6.1) and initial setup information (<***wpinfo***> see L.4.6.2), followed by either paragraph(s) (<***para***> see L.4.1.5.3), procedure(s) (<***proc***> see L.4.1.8.1), and/or paragraph(s) with required alert notices (<***specpara***> see L.4.1.1.1).

a. The DTD fragment of <***short***>: See G.3.1.16.1a.

b. The attributes of <***short***>: See G.3.1.16.1 b.

G.3.1.16.3 The element <***intermediate***> is used for criteria for intermediate-length storage of aircraft. The element <***intermediate***> contains an optional title (<***title***> see L.4.1.5.1), followed by an optional procedure summary (<***wpsum***> see L.4.6.1) and initial setup information (<***wpinfo***> see L.4.6.2), followed by either paragraph(s) (<***para***> see L.4.1.5.3), procedure(s) (<***proc***> see L.4.1.8.1), and/or paragraph(s) with required alert notices (<***specpara***> see L.4.1.1.1).

a. The DTD fragment of <***intermediate***>: See G.3.1.16.1a.

b. The attributes of <***intermediate***>: See G.3.1.16.1 b.

G.3.1.17 **Weight and Balance Work Package <*weightbalwp*>.** The weight and balance work package <***weightbalwp***> contains the scope of the work package and makes reference to TM 55-1500-342-23 for the

computation of weight and balance for loading and individual aircraft. The element <***weightbalwp***> contains a work package title (<***title***> see L.4.1.5.1) , a general information section (<***geninfo***> see L.4.5.7) , a form chart (<***formchart***>) and weight instructions (<***weightinst***>) are intended to be used. Volume separation (***%vol.group;*** see L.3.5) may not occur within this element. Necessary table(s) (<***table***> see L.4.2.1) and/or figure(s) (<***figure***> see L.4.4.1) may be included any where in the element. The paragraph(s) may be entered using an entity reference (see A.3.5.2) when the text of the paragraph(s) contains the verbatim statement found in MIL-STD-40051.

NOTE

The elements <*wtbalance*>**,** <*fuel-oilwt*>**,** <*persnnlwt*>**,** <*missneqpwt*>**,** <*cargoloading*> **and** <*loadwtlimit*> **are designated for shipping information chapter and is not discussed in the supporting information chapter.**

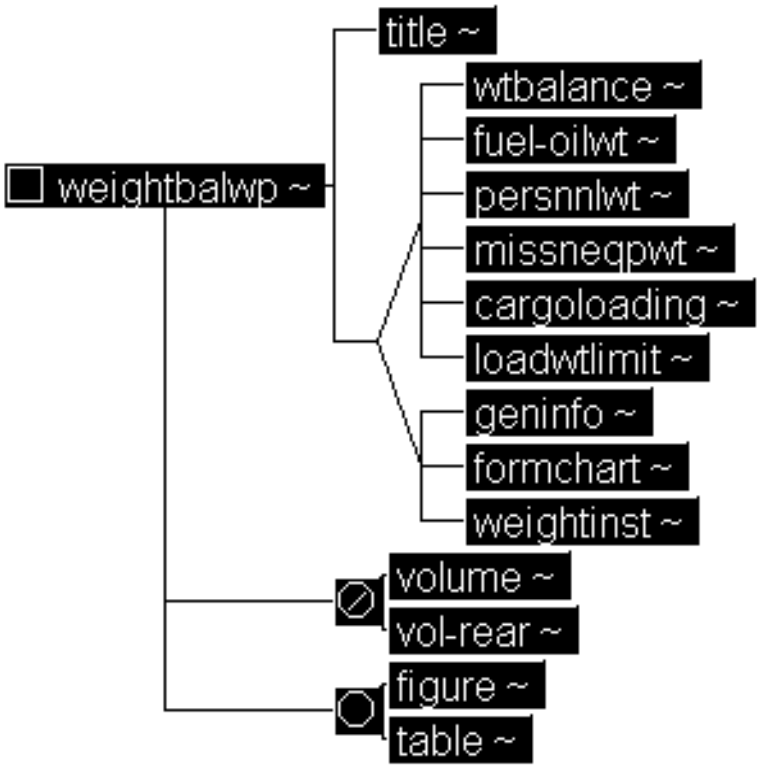

Figure 94 Weight and Balance Work Package DTD Hierarchy

a. DTD fragment for <***weightbalwp***>:

```
<!ELEMENT weightbalwp - - (title, ((wtbalance, fuel-oilwt, persnnlwt, missneqpwt,
                            cargoloading, loadwtlimit) | (geninfo, formchart,
                            weightinst)))  -(%vol.group;) +(figure | table)>
<!ATTLIST weightbalwp
          %tracking;
          %wprsrc-vals;
```

```
        %bodyatt;
        %secur;>
```

b. Attributes for <***weightbalwp***>:

1. **%TRACKING;** - Refer to common parameter entities for a complete description (see L.5.6).
2. **%WPRSRC-VALS;** - Refer to common parameter entities for a complete description (see L.5.5).
3. **%BODYATT;** - Refer to common parameter entities for a complete description (see L.5.1).
4. **%SECUR;** - Refer to common parameter entities for a complete description (see L.5.3).

G.3.1.17.1 The element <***formchart***> contains information on the usage of forms and charts within the weights and balance work package. The element <***formchart***> contains the paragraphs of text that may be grouped into sections or subsections (***%titldtext;*** see L.3.3).

a. DTD fragment for <***formchart***>:

```
<!ELEMENT formchart - - (%titldtext;)>
<!ATTLIST formchart
        %refs;
        %secur;>
```

b. Attributes for <***formchart***>:

1. **%REFS;** - Refer to common parameter entities for a complete description (see L.5.2).
2. **%SECUR;** - Refer to common parameter entities for a complete description (see L.5.3).

G.3.1.17.2 The element <***weightinst***> contains the weighing instructions and must be prepared in accordance with AR 95-16. The element <***weightinst***> contains the preliminary weighing instructions <***prelim***> followed by the weighing equipment instructions <***weighteqp***>.

a. DTD fragment for <***weightinst***>:

```
<!ELEMENT weightinst - - (prelim, weighteqp)>
<!ATTLIST weightinst
        %refs;
        %secur;>
```

b. Attributes for <***weightinst***>:

1. **%REFS;** - Refer to common parameter entities for a complete description (see L.5.2).
2. **%SECUR;** - Refer to common parameter entities for a complete description (see L.5.3).

G.3.1.17.2.1 The element <***prelim***> is used to enter the preliminary weighing instructions not covered in TM 55-1500-342-23. This element is used as part of a weight and balance work package applying to aircraft only. The element <***prelim***> contains the paragraphs of text that may be grouped into sections or subsections (***%titldtext;*** see L.3.3).

a. DTD fragment for <***prelim***>:

```
<!ELEMENT prelim - - (%titldtext;)>
```

```
<!ATTLIST prelim
          %refs;
          %secur;>
```

b. Attributes for <***prelim***>:

1. **%REFS;** - Refer to common parameter entities for a complete description (see L.5.2).
2. **%SECUR;** - Refer to common parameter entities for a complete description (see L.5.3).

G.3.1.17.2.2 The element <***weighteqp***> is used to enter any additional instruction for use of the weighing equipment in the individual aircraft. The element <***weighteqp***> contains the paragraphs of text that may be grouped into sections or subsections (***%titldtext;*** see L.3.3).

a. DTD fragment for <***weighteqp***>:

```
<!ELEMENT weighteqp - - (%titldtext;)>
<!ATTLIST weighteqp
          %refs;
          %secur;>
```

b. Attributes for <***weighteqp***>:

1. **%REFS;** - Refer to common parameter entities for a complete description (see L.5.2).
2. **%SECUR;** - Refer to common parameter entities for a complete description (see L.5.3).

G.3.1.18 **Depot Mobilization Requirements Work Package <*mobilwp*>.** The depot mobilization requirements work package <***mobilwp***> includes the modifications, deletions, or additions to the preshop analysis or overhaul procedure required during mobilization. The element contains a work package title (<***title***> see L.4.1.5.1), an introductory section (<***intro***> see L.4.5.8) and requirements to modify, delete, or add data to the DMWR during mobilization (<***mobilreq***>). Volume separation (***%vol.group;*** see L.3.5) may not occur within this element. This work package is for depot only.

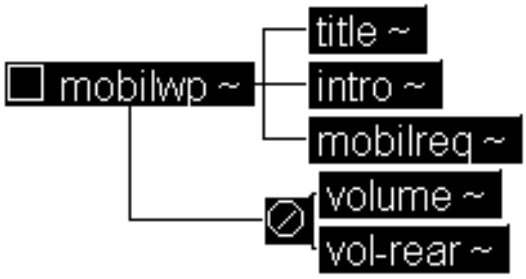

Figure 95 Depot Mobilization Requirements Work Package DTD Hierarchy

a. DTD fragment for <***mobilwp***>:

```
<!ELEMENT mobilwp - - (title, intro, mobilreq) -(%vol.group;)>
<!ATTLIST mobilwp
          wpno            ID       #REQUIRED
          %navlink;
          %tracking;
```

```
%wpbodyatt;
%secur;>
```

b. Attributes for <***mobilwp***>:

1. **WPNO** - The unique number assigned to this work package by the original developer. This number remains the same when the work package is reused. The work package is referenced through an ID which is (#REQUIRED) and remains with the work package for the work package life. The FOSI generates the work package sequence number. Refer to MIL-STD-40051 Part 1 to obtain the work package number format.
2. **%NAVLINK;** - Refer to common parameter entities for a complete description (see L.5.8).
3. **%TRACKING;** - Refer to common parameter entities for a complete description (see L.5.6).
4. **%WPBODYATT;** - Refer to common parameter entities for a complete description (see L.5.4).
5. **%SECUR;** - Refer to common parameter entities for a complete description (see L.5.3).

G.3.1.18.1 The element <***mobilreq***> is used for the requirements for all analysis and procedures that are modified during mobilization are contained within the mobilization requirements. The element <***mobilreq***> contains a required title (<***title***> see L.4.1.5.1) followed by an explanation paragraph (<***para***> see L.4.1.5.3), followed by a mobilization requirement table (<***mobiltab***>).

a. DTD fragment for <***mobilreq***>:

```
<!ELEMENT mobilreq - - (title, para, mobiltab)>
<!ATTLIST mobilreq
          %refs;
          %secur;>
```

b. Attributes for <***mobilreq***>:

1. **%REFS;** - Refer to common parameter entities for a complete description (see L.5.2).
2. **%SECUR;** - Refer to common parameter entities for a complete description (see L.5.3).

G.3.1.18.1.1 The element <***mobiltab***> is standard mobilization table that contains the requirements for all analysis and procedures that are modified during mobilization. The element contains a table title (<***title***> see L.4.1.5.1), page number reference (<***pageloc***> see L.4.1.3.5) is the first column, work package reference (<***xref***> see L.4.1.3.8) is the second column, and action required for mobilization (<***actionreq***>) is the third column.

a. DTD fragment for <***mobiltab***>:

```
<!ELEMENT mobiltab - o (title, (pageloc, xref actionreq)+)>
<!ATTLIST mobiltab
          %refs;
          %secur;>
```

b. Attributes for <***mobiltab***>:

1. **%REFS;** - Refer to common parameter entities for a complete description (see L.5.2).
2. **%SECUR;** - Refer to common parameter entities for a complete description (see L.5.3).

G.3.1.18.1.1.1 The element <***actionreq***> describes additional action necessary for equipment mobilization.

a. DTD fragment for <***actionreq***>:

```
<!ELEMENT actionreq - o (%text;)>
<!ATTLIST actionreq
            %bodyatt;
            %secur;>
```

b. Attributes for <***actionreq***>:

1. **%BODYATT;** - Refer to common parameter entities for a complete description (see L.5.1).
2. **%SECUR;** - Refer to common parameter entities for a complete description (see L.5.3).

G.3.1.19 **Component Checklist Work Package <*compchklistwp*>.** The component checklist work package <***compchklistwp***> contains the requirements to prepare a checklist to support preshop analysis. The element contains a work package title (<***title***> see L.4.1.5.1), an introductory section (<***intro***> see L.4.5.8) and component checklist (<***compchklist***>). Volume separation (***%vol.group;*** see L.3.5) may not occur within this element. This work package is for Depot only.

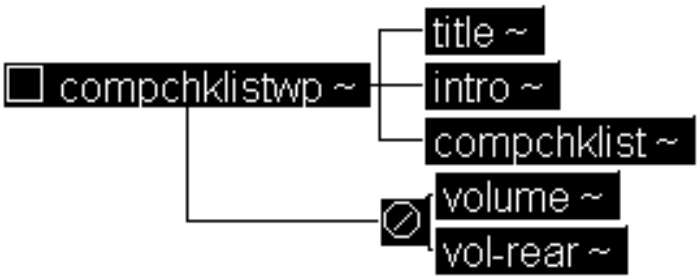

Figure 96 Component Checklist Work Package DTD Hierarchy

a. DTD fragment for <***compchklistwp***>:

```
<!ELEMENT compchklistwp - - (title, intro, compchklist)  -(%vol.group;)>
<!ATTLIST compchklistwp
          wpno            ID       #REQUIRED
          %navlink;
          %tracking;
          %wpbodyatt;
          %secur;>
```

b. Attributes for <***compchklistwp***>:

1. **WPNO** - The unique number assigned to this work package by the original developer. This number remains the same when the work package is reused. The work package is referenced through an ID which is (#REQUIRED) and remains with the work package for the work package life. The FOSI generates the work package sequence number. Refer to MIL-STD-40051 Part 1 to obtain the work package number format.

2. **%NAVLINK;** - Refer to common parameter entities for a complete description (see L.5.8).
3. **%TRACKING;** - Refer to common parameter entities for a complete description (see L.5.6).
4. **%WPBODYATT;** - Refer to common parameter entities for a complete description (see L.5.4).
5. **%SECUR;** - Refer to common parameter entities for a complete description (see L.5.3).

G.3.1.19.1 The element <***compchklist***> is used for a standard component checklist containing a blank form on which to list all information that is required prior to preshop analysis. The element <***compchklist***> contains the labeled blank entries for a location to enter each of the following: a name/nomenclature of the equipment (<***name***> see L.4.5.11) followed by an optional serial number (<***serno***>), an optional date received element (<***daterec***>), an optional location for where it was received (<***recfrom***>), an optional component name (<***compname***>), an optional NSN (<***nsn***> see L.4.5.12), optional part number(s) (<***partno***> see L.4.5.13), an optional quantity required (<***qty***> see L.4.6.2.2.1.4), an optional quantity received (<***qtyrec***>) and an optional visual damage found (<***damage***>).

a. DTD fragment for <***compchklist***>:

```
<!ELEMENT compchklist - - (name, serno?, daterec?, recfrom?, compname?,
                           nsn?, partno*, qty?, qtyrec?, damage?)>
<!ATTLIST compchklist
          %refs;
          %secur;>
```

b. Attributes for <***compchklist***>:

1. **%REFS;** - Refer to common parameter entities for a complete description (see L.5.2).
2. **%SECUR;** - Refer to common parameter entities for a complete description (see L.5.3).

G.3.1.19.1.1 The element <***serno***> contains a labeled blank the serial number of the equipment being repaired or overhauled. The element <***serno***> contains the parameter entity ***%text;*** (see L.3.6) is available to enter inline formatting and contextual characteristics.

a. DTD fragment for <***serno***>:

```
<!ELEMENT serno - o (%text;)>
<!ATTLIST serno
          %refs;
          %secur;>
```

b. Attributes for <***serno***>:

1. **%REFS;** - Refer to common parameter entities for a complete description (see L.5.2).
2. **%SECUR;** - Refer to common parameter entities for a complete description (see L.5.3).

G.3.1.19.1.2 The element <***daterec***> contains a labeled blank for entering the date the component was received. The element <***daterec***> contains the parameter entity ***%text;*** (see L.3.6) is available to enter inline formatting and contextual characteristics.

a. DTD fragment for <***daterec***>:

```
<!ELEMENT daterec - o (%text;)>
<!ATTLIST daterec
          %refs;
          %secur;>
```

b. Attributes for <***daterec***>:

1. **%REFS;** - Refer to common parameter entities for a complete description (see L.5.2).
2. **%SECUR;** - Refer to common parameter entities for a complete description (see L.5.3).

G.3.1.19.1.3 The element <***recfrom***> contains a labeled blank for entering the unit that supplied the component. The element <***recfrom***> contains the parameter entity ***%text;*** (see L.3.6) is available to enter inline formatting and contextual characteristics.

a. DTD fragment for <***recfrom***>:

```
<!ELEMENT recfrom - o (%text;)>
<!ATTLIST recfrom
          %refs;
          %secur;>
```

b. Attributes for <***recfrom***>:

1. **%REFS;** - Refer to common parameter entities for a complete description (see L.5.2).
2. **%SECUR;** - Refer to common parameter entities for a complete description (see L.5.3).

G.3.1.19.1.4 The element <***compname***> contains a labeled blank for entering the name of the component. The element <***compname***> contains the parameter entity ***%text;*** (see L.3.6) is available to enter inline formatting and contextual characteristics.

a. DTD fragment for <***compname***>:

```
<!ELEMENT compname - o (%text;)>
<!ATTLIST compname
          %refs;
          %secur;>
```

b. Attributes for <***compname***>:

1. **%REFS;** - Refer to common parameter entities for a complete description (see L.5.2).
2. **%SECUR;** - Refer to common parameter entities for a complete description (see L.5.3).

G.3.1.19.1.5 The element <***qtyrec***> contains a labeled blank for entering the quantity of components received. The element <***qtyrec***> contains the parameter entity ***%text;*** (see L.3.6) is available to enter inline formatting and contextual characteristics.

a. DTD fragment for <***qtyrec***>:

```
<!ELEMENT qtyrec - o (%text;)>
<!ATTLIST qtyrec
```

```
        %refs;
        %secur;>
```

b. Attributes for <***qtyrec***>:

1. **%REFS;** - Refer to common parameter entities for a complete description (see L.5.2).
2. **%SECUR;** - Refer to common parameter entities for a complete description (see L.5.3).

G.3.1.19.1.6 The element <***damage***> contains a labeled blank for entering any visual damage found on the component. The element <***damage***> contains the parameter entity ***%text;*** (see L.3.6) is available to enter inline formatting and contextual characteristics.

a. DTD fragment for <***damage***>:

```
<!ELEMENT damage - o (%text;)>
<!ATTLIST damage
        %refs;
        %secur;>
```

b. Attributes for <***damage***>:

1. **%REFS;** - Refer to common parameter entities for a complete description (see L.5.2).
2. **%SECUR;** - Refer to common parameter entities for a complete description (see L.5.3).

G.3.1.20 **Quality Assurance Requirements Work Package <*qawp*>.** The quality assurance work package <***qawp***> contains the requirements to prepare a quality assurance program which conforms to DESCOM-R 702-1. The element contains a work package title (<***title***> see L.4.1.5.1), a responsibility statement (<***responsibility***>), an optional definition statement (<***def***>), an optional special requirements for inspection tools and equipment statement (<***specialreq***>), an optional certification requirements statement (<***certreq***>), an in-process inspections statement (<***inprocess***>), an acceptance statement (<***acceptance***>), and an optional first article inspection statement (<***first***>). Volume separation (***%vol.group;*** see L.3.5) may not occur within this element.This work package is for depot only.

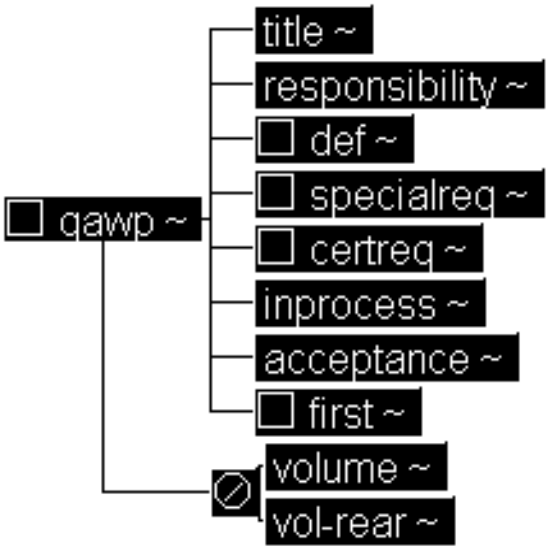

Figure 97 Quality Assurance Requirements Work Package DTD Hierarchy

a. DTD fragment for <***qawp***>:

```
<!ELEMENT qawp - - (title, responsibility, def?, specialreq?, certreq?,
                    inprocess, acceptance, first?) -(%vol.group;)>
<!ATTLIST qawp
          wpno        ID       #REQUIRED
          %navlink;
          %tracking;
          %wpbodyatt;
          %secur;>
```

b. Attributes for <***qawp***>:

1. **WPNO** - The unique number assigned to this work package by the original developer. This number remains the same when the work package is reused. The work package is referenced through an ID which is (#REQUIRED) and remains with the work package for the work package life. The FOSI generates the work package sequence number. Refer to MIL-STD-40051 Part 1 to obtain the work package number format.
2. **%NAVLINK;** - Refer to common parameter entities for a complete description (see L.5.8).
3. **%TRACKING;** - Refer to common parameter entities for a complete description (see L.5.6).
4. **%WPBODYATT;** - Refer to common parameter entities for a complete description (see L.5.4).
5. **%SECUR;** - Refer to common parameter entities for a complete description (see L.5.3).

G.3.1.20.1 The element <***responsibility***> is used for the responsibility statement that defines the responsibilities of the depot/contractor. The element <***responsibility***> contains a paragraph (<***para***> see L.4.1.5.3). The paragraph(s) may be entered using an entity reference (see A.3.5.2) when the text of the paragraph(s) contains the verbatim statement found in MIL-STD-40051.

a. DTD fragment for <***responsibility***>:

```
<!ELEMENT responsibility - o (para)>
<!ATTLIST responsibility
          %refs;
          %secur;>
```

b. Attributes for <***responsibility***>:

1. **%REFS;** - Refer to common parameter entities for a complete description (see L.5.2).
2. **%SECUR;** - Refer to common parameter entities for a complete description (see L.5.3).

G.3.1.20.2 The element <***def***> (see L.4.1.2.3.2) contains a specific definition for all QA terms applicable to the DMWR

G.3.1.20.3 The element <***specialreq***> is used for special requirements for inspection tools and equipment statement. The element defines the requirements for the maintenance and calibration of tools and test equipment used in the quality assurance inspections. The element <***specialreq***> contains the paragraphs of text that may be grouped into sections or subsections (***%titldtext;*** see L.3.3).

a. DTD fragment for <***specialreq***>:

```
<!ELEMENT specialreq - o (%titldtext;)>
<!ATTLIST specialreq
          %refs;
          %secur;>
```

b. Attributes for <***specialreq***>:

1. **%REFS;** - Refer to common parameter entities for a complete description (see L.5.2).
2. **%SECUR;** - Refer to common parameter entities for a complete description (see L.5.3).

G.3.1.20.4 The element <***certreq***> is used for a certification requirements statement for certification or licensing requirements for process, procedures, materials, equipment or personnel skills within a quality assurance work package. The element <***certreq***> contains the paragraphs of text that may be grouped into sections or subsections (***%titldtext;*** see L.3.3).

a. DTD fragment for <***certreq***>:

```
<!ELEMENT certreq - o (%titldtext;)>
<!ATTLIST certreq
          %refs;
          %secur;>
```

b. Attributes for <***certreq***>:

1. **%REFS;** - Refer to common parameter entities for a complete description (see L.5.2).
2. **%SECUR;** - Refer to common parameter entities for a complete description (see L.5.3).

G.3.1.20.5 The element <***inprocess***> is used for in-process inspections statement that defines the method used to identify QA inspections. The element <***inprocess***> contains a paragraph (<***para***> see L.4.1.5.3) . The paragraph(s) may be entered using an entity reference (see A.3.5.2) when the text of the paragraph(s) contains the verbatim statement found in MIL-STD-40051.

a. DTD fragment for <***inprocess***>:

```
<!ELEMENT inprocess - o (para)>
<!ATTLIST inprocess
          %refs;
          %secur;>
```

b. Attributes for <***inprocess***>:

1. **%REFS;** - Refer to common parameter entities for a complete description (see L.5.2).
2. **%SECUR;** - Refer to common parameter entities for a complete description (see L.5.3).

G.3.1.20.6 The element <***acceptance***> is used for acceptance statement that defines the method used for acceptance inspection. The element <***acceptance***> contains a paragraph (<***para***> see L.4.1.5.3) . The paragraph(s) may be entered using an entity reference (see A.3.5.2) when the text of the paragraph(s) contains the verbatim statement found in MIL-STD-40051.

a. DTD fragment for <***acceptance***>:

```
<!ELEMENT acceptance - o (para)>
<!ATTLIST acceptance
          %refs;
          %secur;>
```

b. Attributes for <***acceptance***>:

1. **%REFS;** - Refer to common parameter entities for a complete description (see L.5.2).
2. **%SECUR;** - Refer to common parameter entities for a complete description (see L.5.3).

G.3.1.20.7 The element <***first***> is used for the first article inspection statement that defines the criteria used to inspect the first article in accordance with DESCOM-R 702-1. The element <***first***> contains the paragraphs of text that may be grouped into sections or subsections (***%titldtext;*** see L.3.3).

a. DTD fragment for <***first***>:

```
<!ELEMENT first - o (%titldtext;)>
<!ATTLIST first
          %refs;
          %secur;>
```

b. Attributes for <***first***>:

1. **%REFS;** - Refer to common parameter entities for a complete description (see L.5.2).
2. **%SECUR;** - Refer to common parameter entities for a complete description (see L.5.3).

G.3.1.21 **Wiring Diagrams Work Package <*wiringwp*>.** The wiring diagrams work package <***wiringwp***> contains The element contains a work package title (<***title***> see L.4.1.5.1), an introductory section (<***intro***> see L.4.5.8), a wire identification explanation (<***wireid***>), an abbreviations used list (<***abbrev***>), and wiring diagrams (<***wiringdiag***>). Volume separation (***%vol.group;*** see L.3.5) may not occur within this element.

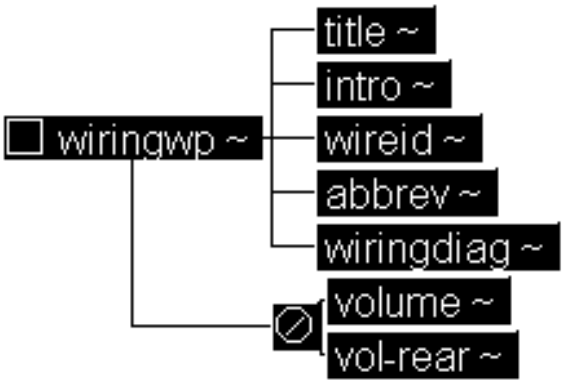

Figure 98 Wiring Diagrams Work Package DTD Hierarchy

a. DTD fragment for <***wiringwp***>:

```
<!ELEMENT wiringwp - - (title, intro, wireid, abbrev, wiringdiag)
```

```
                        -(%vol.group;)>
<!ATTLIST wiringwp
          wpno            ID       #REQUIRED
          %navlink;
          %tracking;
          %wpbodyatt;
          %secur;>
```

b. Attributes for <***wiringwp***>:

1. **WPNO** - The unique number assigned to this work package by the original developer. This number remains the same when the work package is reused. The work package is referenced through an ID which is (#REQUIRED) and remains with the work package for the work package life. The FOSI generates the work package sequence number. Refer to MIL-STD-40051 Part 1 to obtain the work package number format.
2. **%NAVLINK;** - Refer to common parameter entities for a complete description (see L.5.8).
3. **%TRACKING;** - Refer to common parameter entities for a complete description (see L.5.6).
4. **%WPBODYATT;** - Refer to common parameter entities for a complete description (see L.5.4).
5. **%SECUR;** - Refer to common parameter entities for a complete description (see L.5.3).

G.3.1.21.1 The element <***wireid***> is used for explanation of the wire identifications by number. The wiring identification should be prepared as table with the columns described in the narrative. The element <***wireid***> contains the paragraphs of text that may be grouped into sections or subsections (***%titldtext;*** see L.3.3).

a. DTD fragment for <***wireid***>:

```
<!ELEMENT wireid - o (%titldtext;)>
<!ATTLIST wireid
          %refs;
          %secur;>
```

b. Attributes for <***wireid***>:

1. **%REFS;** - Refer to common parameter entities for a complete description (see L.5.2).
2. **%SECUR;** - Refer to common parameter entities for a complete description (see L.5.3).

G.3.1.21.2 The element <***abbrev***> is a statement that abbreviations are in accordance with MIL-STD-12, except when the abbreviation stands for a marking actually found in the equipment. The element <***abbrev***> contains the paragraphs of text that may be grouped into sections or subsections (***%titldtext;*** see L.3.3).

a. DTD fragment for <***abbrev***>:

```
<!ELEMENT abbrev - o (%titldtext;)>
<!ATTLIST abbrev
          %refs;
          %secur;>
```

b. Attributes for <***abbrev***>:

1. **%REFS;** - Refer to common parameter entities for a complete description (see L.5.2).
2. **%SECUR;** - Refer to common parameter entities for a complete description (see L.5.3).

G.3.1.21.3 The element <***wiringdiag***> is used for wiring diagrams, the element contains all electrical, electronic system, and circuit wiring diagrams. The element <***wiringdiag***> contains at least one figure (<***figure***> see L.4.1.5.3).

a. DTD fragment for <***wiringdiag***>:

```
<!ELEMENT wiringdiag - o (figure)+)>
<!ATTLIST wiringdiag
          %refs;
          %secur;>
```

b. Attributes for <***wiringdiag***>:

1. **%REFS;** - Refer to common parameter entities for a complete description (see L.5.2).
2. **%SECUR;** - Refer to common parameter entities for a complete description (see L.5.3).

G.3.1.22 **Generic Supporting Information Work Package <*genwp*>.** If a manual contains a work package that does not fit any of the content specific work packages, the generic supporting information work package (<***genwp***>) may be used to enter the text of the work package. There may be more than one generic work package contained in the supporting information chapter, and all will occur at the end of the chapter. The element contains a work package title (<***title***> see L.4.1.5.1) followed by paragraph(s) (<***para***> see L.4.1.5.3), paragraph(s) with required notices (<***specpara***> see L.4.1.1.1), and/or procedures (<***proc***> see L.4.1.8.1) that may be grouped into section(s) (<***title***> see L.4.1.5.1), or subsection(s) (<***subtitle***> see L.4.1.5.2).

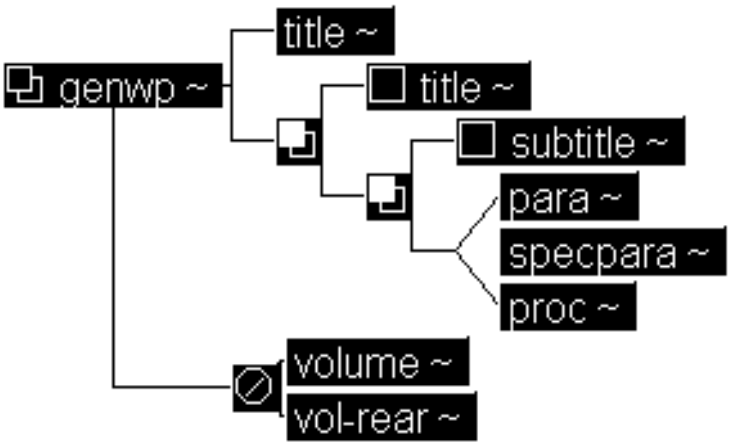

Figure 99 Generic Appendix Work Package DTD Hierarchy

a. DTD fragment for <***genwp***>:

```
<!ELEMENT genwp - - (title, (title?, (subtitle?, (para | specpara |
                      proc))+)+) -(%vol.group;)>
<!ATTLIST genwp
          wpno         ID       #REQUIRED
```

```
subject      CDATA    #REQUIRED
%tracking;
%wpbodyatt;
%secur;>
```

b. Attributes for <***genwp***>:

1. **WPNO** - The unique number assigned to this work package by the original developer. This number remains the same when the work package is reused. The work package is referenced through an ID which is (#REQUIRED) and remains with the work package for the work package life. The FOSI generates the work package sequence number. Refer to MIL-STD-40051 Part 1 to obtain the work package number format.
2. **SUBJECT** - Specifies the subject of the work package for database indexing.
3. **%TRACKING;** - Refer to common parameter entities for a complete description (see L.5.6).
4. **%WPBODYATT;** - Refer to common parameter entities for a complete description (see L.5.4).
5. **%SECUR;** - Refer to common parameter entities for a complete description (see L.5.3).

G.3.2 **Aviation Supporting Information Chapter <*avsim*>.** The aviation supporting information chapter contains two types of chapters; pilot operator's instruction ***%pilotopsim;*** (the element will be covered in future revision of this handbook) or shipping equipment ***%shipsim;*** (the element will be covered in future revision of this handbook) supporting information.

THIS PAGE INTENTIONALLY LEFT BLANK.

Parts Information

H.1 **Scope.** The following paragraphs give a description and use of the elements used in the MIL-STD-2361(SC) Parts Information Chapter DTD.

H.2 **Applicable documents.** Refer to paragraph 2.

H.3 **Parts Information Chapter <*pim*>.** Parts information must be prepared as work packages and contained in a parts information chapter <***pim***>. The chapter must contain an IETM login procedure (<***login***> see L.4.7.9), followed by introduction RPSTL work package <***introwp***>, repair parts list work package(s) <***plwp***>, special tools list work package(s) <***stlwp***>, a part number index work package <***pnindxwp***> and an optional reference designator index work package <***refdesindxwp***>. The element consist of the following elements described below:

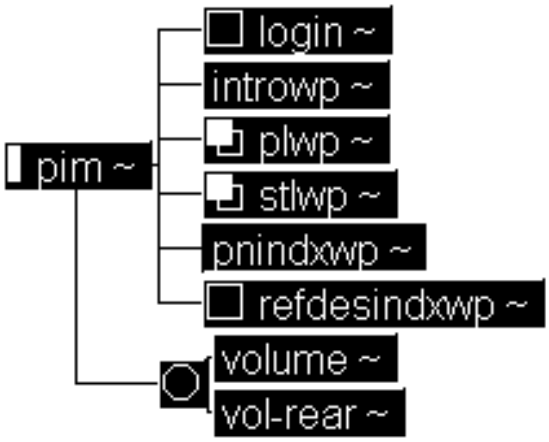

Figure 100 Parts Information Chapter DTD Hierarchy

a. DTD fragment for pim:

```
<!ELEMENT pim - - (login?, introwp, plwp+, stlwp+, pnindxwp, refdesindxwp?)
                   +(%vol.group;)>
<!ATTLIST pim
             tmno          CDATA                    #CURRENT
             imno          CDATA                    #REQUIRED
             imctrlabel    NUMBER                   #REQUIRED
             imlevel       (depot | operator |
                           gensup | dirsup |
                           unitlvl | inter |
                           avum-avim | tmlvls)      #REQUIRED
             dmwr-inclus   (parts | parts-tools |
                            none)                   #REQUIRED
             revno         NUMBER                   #REQUIRED
             chngno        NUMBER                   #REQUIRED
```

```
date          CDATA                    #IMPLIED
%refs;
%secur;>
```

b. Attributes for <***pim***>:

1. **TMNO** - The number of the current TM. The prefix TM must be included in the attribute value. The first time the attribute is referenced for the element it is treated as required, thereafter that it will assume the current attribute value.
2. **IMNO** - Reserved for a unique identifying number of the information chapter, when and if such a numbering system is instituted; analogous to the attribute "WPNO" at the work package level.
3. **IMCTRLABEL** - A label giving the sequence number of the information chapter within this version of the TM; allows an individual IM to be composed with full numbering of pages and components.
4. **IMLEVEL** - The maintenance level of the information chapter.
   (a) “OPERATOR” - Applies to operator maintenance level.
   (b) “UNITLVL” - Applies to unit maintenance level.
   (c) “DIRSUP” - Applies to direct support (DS) maintenance level.
   (d) “GENSUP” - Applies to general support (GS) maintenance level.
   (e) “INTER” - Applies to intermediate (DS/GS) maintenance level.
   (f) “DEPOT” - Applies to depot maintenance level.
   (g) “AVUM-AVIM” - Applies to aviation unit (AVUM) and intermediate (AVIM) maintenance level.
   (h) “TMLVLS” - Applies to all maintenance levels.
5. **DMWR-INCLUS** - Specifies whether a part of the DMWR.
   (a) “PARTS” - The chapter is part of a parts DMWR manual.
   (b) “PARTS-TOOLS” - The chapter is part of a parts and tools DMWR manual.
   (c) “PARTS” - The chapter is not part of a DMWR manual.
6. **%IMRSRC-VALS;** - Refer to common parameter entities for a complete description (see L.5.7).
7. **REVNO** - The overall revision number for the information chapter.
8. **CHNGNO** - The overall change number for the information chapter.
9. **DATE** - The date of the current version of the chapter.
10. **%REFS;** - Refer to common parameter entities for a complete description (see L.5.2).
11. **%SECUR;** - Refer to common parameter entities for a complete description (see L.5.3).

H.3.1 **Introductory RPSTL Work Package <*introwp*>.** The element <***introwp***> contains applicable content items as specified by the contracting activity and contains introductory material for the parts information chapter. The <***introwp***> contains a work package title (<***title***> see L.4.1.5.1), either introductory paragraphs of text that may be grouped into sections or subsections (***%titldtext;*** see L.3.3)or “how to use” this chapter (<***howtouse***> see K.3.1.1.7). The <***introwp***> element can NOT include any figures (<***figure***>) or volume

separations (***%vol.group;***). The paragraph(s) may be entered using an entity reference (see A.3.5.2) when the text of the paragraph(s) contains the verbatim statement found in MIL-STD-40051. This work package must consist of the following elements described below:

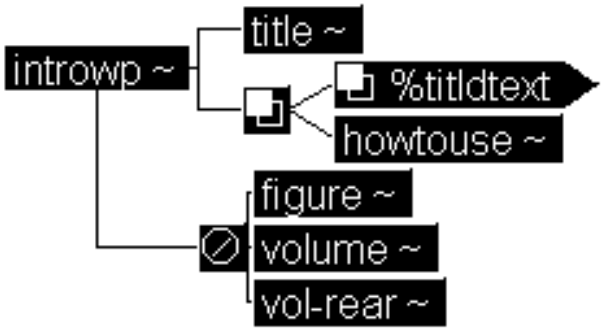

Figure 101 Introductory Work Package DTD Hierarchy

a. DTD fragment for <***introwp***>:

```
<!ELEMENT introwp - - (title, ((%titldtext;)+ | howtouse)+) -(figure |
                        %vol.group;) >
<!ATTLIST introwp
          wpno      ID         #REQUIRED
          idmap     ENTITY     #IMPLIED
          %wprsrc-vals;
          %tracking;
          %wpbodyatt;
          %secur;>
```

b. Attributes for <***introwp***>:

1. **WPNO** - The unique number assigned to this work package by the original developer. This number remains the same when the work package is reused. The work package is referenced through an ID which is (#REQUIRED) and remains with the work package for the work package life. The FOSI generates the work package sequence number. Refer to MIL-STD-40051 Part 1 to obtain the work package number format.
2. **IDMAP** - The name of an entity containing a cross-reference table of IDs and IDREFs used in different versions of the work package identified by the attribute “WPNO”. This map is required when a work package is used in more than one technical with different sets of cross-referenced IDREFs. Use of this map is the responsibility of the application.
3. **%WPRSRC-VALS;** - Refer to common parameter entities for a complete description (see L.5.5).
4. **%TRACKING;** - Refer to common parameter entities for a complete description (see L.5.6).
5. **%WPBODYATT;** - Refer to common parameter entities for a complete description (see L.5.4).
6. **%SECUR;** - Refer to common parameter entities for a complete description (see L.5.3).

H.3.2 **Repair Parts List Work Package <*plwp*>.** The element <***plwp***> contains lists and illustrations of all repair parts in accordance with the functional group codes. This work package contains a work package title (<***title***> see L.4.1.5.1) and a repair parts list (<***pl***>). The <***plwp***> element can NOT include any volume separations (***%vol.group;***). The <***plwp***> must consist of the following elements described below:

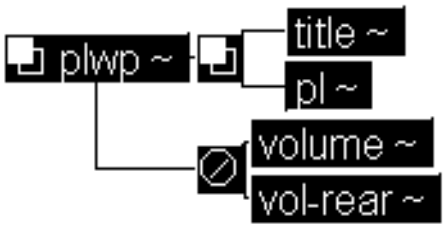

Figure 102 Repair Parts List Work Package DTD Hierarchy

a. DTD fragment for <***plwp***>:

```
<!ELEMENT plwp - - (title, pl)+  -(%vol.group;) >
<!ATTLIST plwp
          wpno      ID         #REQUIRED
          %navlink;
          %tracking;
          %wpbodyatt;
          %secur;>
```

b. Attributes for <***plwp***>:

1. **WPNO** - The unique number assigned to this work package by the original developer. This number remains the same when the work package is reused. The work package is referenced through an ID which is (#REQUIRED) and remains with the work package for the work package life. The FOSI generates the work package sequence number. Refer to MIL-STD-40051 Part 1 to obtain the work package number format.
2. **%NAVLINK;** - Refer to common parameter entities for a complete description (see L.5.8).
3. **%TRACKING;** - Refer to common parameter entities for a complete description (see L.5.6).
4. **%WPBODYATT;** - Refer to common parameter entities for a complete description (see L.5.4).
5. **%SECUR;** - Refer to common parameter entities for a complete description (see L.5.3).

H.3.2.1 The element <***pl***> is used for each repair parts list element will consist of an illustration with an associated repair parts list standard table. Currently the element's content model is EMPTY and the writer will insert from the Commodity Control Supply System (CCSS) database the repair parts list report. Future release of MIL-STD-2361(SC) will include the content model for the repair parts list.

a. DTD fragment for <***pl***>:

```
<!ELEMENT pl - o EMPTY >
<!ATTLIST pl
          %refs;
```

```
%secur;>
```

b. Attributes for <***pl***>:

1. **%REFS;** - Refer to common parameter entities for a complete description (see L.5.2).
2. **%SECUR;** - Refer to common parameter entities for a complete description (see L.5.3).

H.3.3 **Special Tools Lists Work Package <*stlwp*>.** The element <***stlwp***> contains lists and illustrations of all special tools, special TMDE, and special support equipment in accordance with the functional group codes. This work package contains a work package title (<***title***> see L.4.1.5.1) and a special tools parts list (<***stl***>). The <***plwp***> element can NOT include any volume separations (***%vol.group;***).There may be more than one special tools list work package in a parts information chapter.

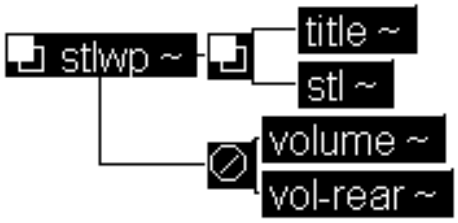

Figure 103 Special Tools Lists DTD Hierarchy

a. DTD fragment for <***stlwp***>:

```
<!ELEMENT stlwp - o (title, stl)+  -(%vol.group;) >
<!ATTLIST stlwp
          wpno      ID         #REQUIRED
          %navlink;
          %tracking;
          %wpbodyatt;
          %secur;>
```

b. Attributes for <***stlwp***>:

1. **WPNO** - The unique number assigned to this work package by the original developer. This number remains the same when the work package is reused. The work package is referenced through an ID which is (#REQUIRED) and remains with the work package for the work package life. The FOSI generates the work package sequence number. Refer to MIL-STD-40051 Part 1 to obtain the work package number format.
2. **%NAVLINK;** - Refer to common parameter entities for a complete description (see L.5.8).
3. **%TRACKING;** - Refer to common parameter entities for a complete description (see L.5.6).
4. **%WPBODYATT;** - Refer to common parameter entities for a complete description (see L.5.4).
5. **%SECUR;** - Refer to common parameter entities for a complete description (see L.5.3).

H.3.3.1 The element <***stl***> is used for each special tools list will consist of an illustration with an associated special tools list table. Currently the element's content model is EMPTY and the writer will insert from the Commodity Control Supply System (CCSS) database the special tools list report. Future release of MIL-STD-2361(SC) will include the content model for the special tools list.

a. DTD fragment for <***stl***>:

```
<!ELEMENT stl - o EMPTY >
<!ATTLIST stl
          %refs;
          %navlink;
          %secur;>
```

b. Attributes for <***stl***>:

1. **%REFS;** - Refer to common parameter entities for a complete description (see L.5.2).
2. **%NAVLINK;** - Refer to common parameter entities for a complete description (see L.5.8).
3. **%SECUR;** - Refer to common parameter entities for a complete description (see L.5.3).

H.3.4 **Part Number Index Work Package <*pnindxwp*> .** The element <***pnindxwp***> contains an index that lists the part number, figure number, and item number for all part numbers. The element contains a work package title (<***title***> see L.4.1.5.1) and parts number list (<***prtindex***>). The <***pnindxwp***> element can NOT include any volume separations (***%vol.group;***).

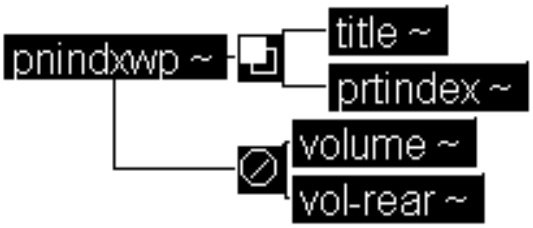

Figure 104 Part Number Index DTD Hierarchy

a. DTD fragment for <***pnindxwp***>:

```
<!ELEMENT pnindxwp - o (title, prtindex)+  -(%vol.group;)>
<!ATTLIST pnindxwp
          wpno      ID         #REQUIRED
          %navlink;
          %tracking;
          %wpbodyatt;
          %secur;>
```

b. Attributes for <***pnindxwp***>:

1. **WPNO** - The unique number assigned to this work package by the original developer. This number remains the same when the work package is reused. The work package is referenced through an ID which is (#REQUIRED) and remains with the work package for the work package life. The FOSI generates the work package sequence number. Refer to MIL-STD-40051 Part 1 to obtain the work package number format.
2. **%NAVLINK;** - Refer to common parameter entities for a complete description (see L.5.8).
3. **%TRACKING;** - Refer to common parameter entities for a complete description (see L.5.6).
4. **%WPBODYATT;** - Refer to common parameter entities for a complete description (see L.5.4).

5. **%SECUR;** - Refer to common parameter entities for a complete description (see L.5.3).

H.3.4.1 The element <***prtindex***> is a listing of reference designators in alphanumeric sequence with a reference to the applicable figure and item number. Currently the element's content model is EMPTY and the writer will insert from the Commodity Control Supply System (CCSS) database the special tools list report. Future release of MIL-STD-2361(SC) will include the content model for the special tools list.

a. DTD fragment for <***prtindex***>:

```
<!ELEMENT prtindex - o EMPTY >
<!ATTLIST prtindex
          %refs;
          %secur;>
```

b. Attributes for <***prtindex***>:

1. **%REFS;** - Refer to common parameter entities for a complete description (see L.5.2).
2. **%SECUR;** - Refer to common parameter entities for a complete description (see L.5.3).

H.3.5 **Reference Designator Index Work Package <*refdesindxwp*>.** The element <***refdesindxwp***> contains an index that lists the reference designator, figure number, and item number for all items with a reference designator. The element contains a work package title (<***title***> see L.4.1.5.1) and reference designator list (<***prtindex***>). The <***refdesindxwp***> element can NOT include any volume separations (***%vol.group;***).

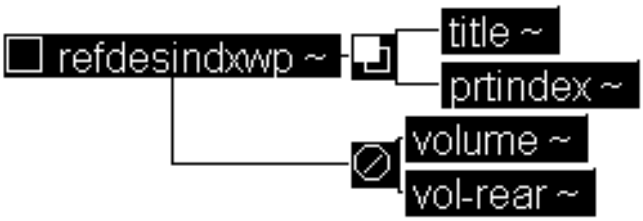

Figure 105 Reference Designator Index DTD Hierarchy

a. DTD fragment for <***refdesindxwp***>:

```
<!ELEMENT refdesindxwp - o (title, prtindex)+  -(%vol.group;) >
<!ATTLIST refdesindxwp
          wpno      ID         #REQUIRED
          %navlink;
          %tracking;
          %wpbodyatt;
          %secur;>
```

b. Attributes for <***refdesindxwp***>:

1. **WPNO** - The unique number assigned to this work package by the original developer. This number remains the same when the work package is reused. The work package is referenced through an ID which is (#REQUIRED) and remains with the work package for the work package life. The FOSI generates the work package sequence number. Refer to MIL-STD-40051 Part 1 to obtain the work package number format.

2. **%NAVLINK;** - Refer to common parameter entities for a complete description (see L.5.8).
3. **%TRACKING;** - Refer to common parameter entities for a complete description (see L.5.6).
4. **%WPBODYATT;** - Refer to common parameter entities for a complete description (see L.5.4).
5. **%SECUR;** - Refer to common parameter entities for a complete description (see L.5.3).

H.3.5.1 The element ***<prtindex>*** (see H.3.4.1) is used for a listing of reference designators in alphanumeric sequence with a reference to the applicable figure and item number.

Shipping Information

I.1 **Scope.** The shipping information chapter will be described in a future release of the handbook. The ***<shipim>*** has not been fully coordinated with respected commands. After full coordination with respected commands the description will be incorporated with the handbook.

I.2 **Applicable documents.** Refer to paragraph 2.

THIS PAGE INTENTIONALLY LEFT BLANK.

Pilot Operating Procedures Information

J.1 **Scope.** The pilot operating procedures information chapter will be described in a future release of the handbook. The **<*pilot-opim*>** has not been fully coordinated with respected commands. After full coordination with respected commands the description will be incorporated with the handbook.

J.2 **Applicable documents.** Refer to paragraph 2.

THIS PAGE INTENTIONALLY LEFT BLANK.

Production

K.1 **Scope.** The following paragraphs give a description and use of elements used in the MIL-STD-2361(SC)Production DTD. The production DTD is used for assembling individual work packages with the other required parts of the applicable technical manual (TM) (i.e., front matter, back matter, etc.).

K.2 **Applicable documents.** Refer to paragraph 2.

K.3 The element <***production***> consists of the element choices for the type of document to be produced. Any material to be published according to the DTD in Technical Manual Production must begin with this element, whether the material is a complete maintenance manual, one or more information modules (chapters), a specialized aviation manual or module, or a supplementary manual. It contains either a manual <***manual***>, an aviation manual <***aviation***>, a supplement <***supplement***>, at least one module <***modules***>, or at least one aviation module <***avmodule***> These elements are described below.

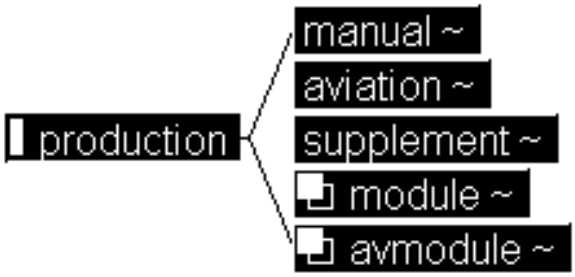

Figure 106 Production DTD Hierarchy

a. DTD fragment for <***production***>:

```
<!ELEMENT production  - - (manual | aviation | supplement | module+ |
                           avmodule+)>
```

K.3.1 **Manual <*manual*>.** The <***manual***> element contains all contents of an assembled technical manual, including the front and rear matter and the body of the manual. There is only one <***manual***> element per TM.

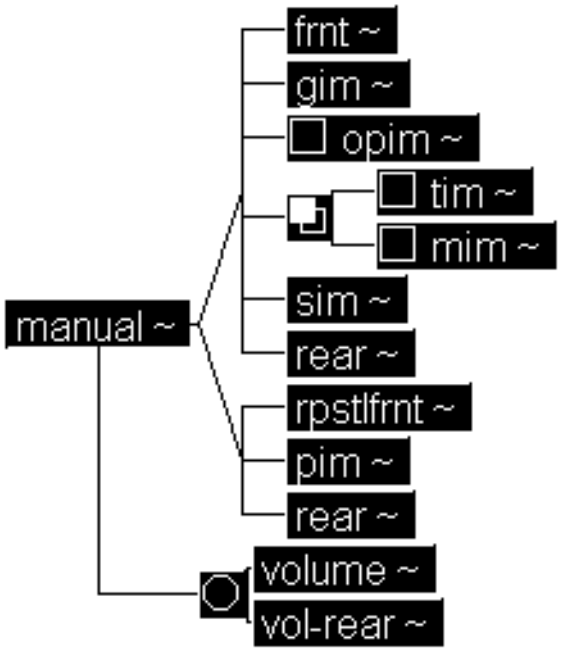

Figure 107 Manual DTD Hierarchy

a. DTD fragment for <***manual***>:

```
<!ELEMENT manual - - ((frnt, gim, opim?, (tim?, mim?)+, sim, rear) |
                      (rpstlfrnt, pim, rear)) +(%vol.group;) >
<!ATTLIST manual
          revno         NUMBER                  #REQUIRED
          maintitl      CDATA                   #REQUIRED
          maintlvls     (10 | 12 | 13 |
                         14 | 20 | 23 |
                         24 | 30 | 34 |
                         40 | avum-avim |
                         dmwr | NA)             #REQUIRED
          rpstl         %yesorno;               #REQUIRED
          dmwr-inclus   (parts | parts-tools)   #IMPLIED
          date          CDATA                   #REQUIRED
          pubno         CDATA                   #IMPLIED
          %refs;
          %secur;>
```

b. Attributes for <***manual***>:

1. **REVNO** - The revision number of the overall manual.
2. **MAINTITL** - Supplies a literal version of the maintenance-level title.

3. **MAINTLVLS** - Specifies the maintenance level(s) authorized to use this manual; this attribute value is used in the FOSI to supply the literal expression of the TM's maintenance level.
4. **RPSTL** - Specifies whether or not the manual includes a RPSTL among its appendixes.
5. **DMWR-INCLUS** - Specifies whether a DMWR includes parts only or parts and tools.
6. **DATE** - The date of the current version of the element.
7. **PUBNO** - Specifies the technical manual publication number
8. **%REFS;** - Refer to common parameter entities for a complete description (see L.5.2).
9. **%SECUR;** - Refer to common parameter entities for a complete description (see L.5.3).

K.3.1.1 **Front Matter for Technical Equipment Manuals <*frnt*>.** The element <***frnt***> contains all front matter of a technical manual and occurs before the first chapter (IM) of the manual. The front matter element <***frnt***> consists of the following elements.

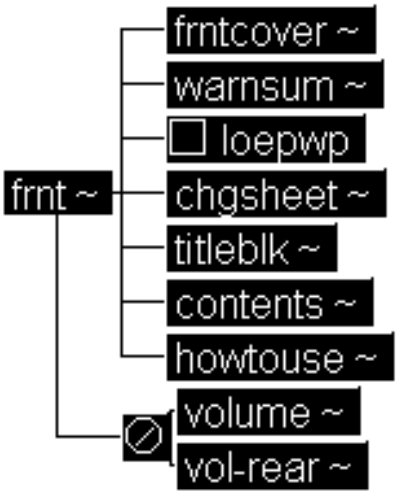

Figure 108 Front Matter for Technical Equipment Manuals DTD Hierarchy

a. DTD fragment for <***frnt***>:

```
<!ELEMENT frnt - - (frntcover, warnsum, loepwp?, chgsheet, titleblk,
                    contents, howtouse) -(%vol.group;)>
<!ATTLIST frnt
          %refs;
          %secur;>
```

b. Attributes for <***frnt***>:

1. **%REFS;** - Refer to common parameter entities for a complete description (see L.5.2).
2. **%SECUR;** - Refer to common parameter entities for a complete description (see L.5.3).

K.3.1.1.1 The element <***frntcover***> is used for identifying the front cover of an assembled TM. It contains the technical manual title <***tmtitle***>, an optional graphic <***graphic***>, optional notices <***notices***>, the service nomenclature <***servnomen***>, and when necessary a change number <***chgno***> and change date <***chgdate***>.

a. DTD fragment for <***frntcover***>:

```
<!ELEMENT frntcover - o (tmtitle, graphic?, notices?, servnomen,
                         (chgno, chgdate)?)>
<!ATTLIST frntcover
          %refs;
          %secur;>
```

b. Attributes for <***frntcover***>:

1. **%REFS;** - Refer to common parameter entities for a complete description (see L.5.2).
2. **%SECUR;** - Refer to common parameter entities for a complete description (see L.5.3).

K.3.1.1.1.1 The element <***tmtitle***> contains all the elements that identify a manual, including at least one manual number <***tminfono***>, the primary title <***prtitle***>, and manual subtitle <***stitle***>.

a. DTD fragment for <***tmtitle***>:

```
<!ELEMENT tmtitle - o (tminfono+, prtitle, stitle?)>
<!ATTLIST tmtitle
          %refs;
          %secur;>
```

b. Attributes for <***tmtitle***>:

1. **%REFS;** - Refer to common parameter entities for a complete description (see L.5.2).
2. **%SECUR;** - Refer to common parameter entities for a complete description (see L.5.3).

K.3.1.1.1.1.1 The element <***tminfono***> is the unique identification of the TM and appears prominently on the front cover and subsequently as a header on every page. If the TM is used by more than one service branch, the proponent's TM number appears first. It contains an optional branch of service <***servbranch***>and a technical manual number <***tmno***>.

a. DTD fragment for <***tminfono***>:

```
<!ELEMENT tminfono - o (servbranch?, tmno)+>
<!ATTLIST tminfono
          %refs;
          %secur;>
```

b. Attributes for <***tminfono***>:

1. **%REFS;** - Refer to common parameter entities for a complete description (see L.5.2).
2. **%SECUR;** - Refer to common parameter entities for a complete description (see L.5.3).

K.3.1.1.1.1.1.1 The element <***servbranch***> is used for a branch of service that has assigned an official TM number to the current manual. The content of this element is derived from the value of the element's attributes.

a. DTD fragment for <***servbranch***>:

```
<!ELEMENT servbranch - o EMPTY>
<!ATTLIST servbranch
          service         (army | af |
                           navy | marines)   #REQUIRED
          qualify          CDATA             #IMPLIED
          procuring        %yesorno;         #IMPLIED
          %refs;
          %secur;>
```

b. Attributes for <***servbranch***>:

1. **SERVICE** - Specifies the service branch.
2. **QUALIFY**- Supplies any further qualification of the service, e.g., NAVAIR.
3. **PROCURING**- If more than one service uses the manual, specifies whether or not this branch is the procuring agency; a non-zero value indicates the current element is the procuring agency.
4. **%REFS;** - Refer to common parameter entities for a complete description (see L.5.2).
5. **%SECUR;** - Refer to common parameter entities for a complete description (see L.5.3).

K.3.1.1.1.1.1.2 The element <***tmno***> contains the number portion of the TM identifying number contained in the element <***tminfono***> (***%text;***(see L.3.6) is available to enter inline formatting and contextual characteristics).

a. DTD fragment for <***tmno***>:

```
<!ELEMENT tmno - o (%text;) >
<!ATTLIST tmno
          %refs;
          %secur;>
```

b. Attributes for <***tmno***>:

1. **%REFS;** - Refer to common parameter entities for a complete description (see L.5.2).
2. **%SECUR;** - Refer to common parameter entities for a complete description (see L.5.3).

K.3.1.1.1.1.2 The element <***prtitle***> contains the primary title of the technical manual, which contains the equipment nomenclature <***sysnomen***>with any relevant identifying numbers or qualifying subject <***subject***>. The primary title appears on the front cover, change sheet, and title block page of the TM.

a. DTD fragment for <***prtitle***>:

```
<!ELEMENT prtitle - o (sysnomen, subject?)+>
<!ATTLIST prtitle
          %refs;
          %secur;>
```

b. Attributes for <***prtitle***>:

1. **%REFS;** - Refer to common parameter entities for a complete description (see L.5.2).
2. **%SECUR;** - Refer to common parameter entities for a complete description (see L.5.3).

K.3.1.1.1.1.2.1 The element <***sysnomen***> contains the equipment name <***name***>, followed optionally by a model number <***modelno***>, either a part number <***partno***> or an NSN <***nsn***>, and an end item code <***eic***>.

a. DTD fragment for <***sysnomen***>:

```
<!ELEMENT sysnomen - o (name, modelno?, (partno | nsn)?, eic?)+>
<!ATTLIST sysnomen
          pretext CDATA #IMPLIED
          %refs;
          %secur;>
```

b. Attributes for <***sysnomen***>:

1. **PRETEXT** - Any text that precedes the equipment nomenclature, e.g., "FOR" or "OF." This is the only mechanism for inserting such words on the front cover.
2. **%REFS;** - Refer to common parameter entities for a complete description (see L.5.2).
3. **%SECUR;** - Refer to common parameter entities for a complete description (see L.5.3).

K.3.1.1.1.1.2.1.1 The element <***name***> (see L.4.5.11) is used to enter the name of the component/assembly.

K.3.1.1.1.1.2.1.2 The element <***modelno***> (see L.4.5.10) is used to enter the model number of the component/ assembly.

K.3.1.1.1.1.2.1.3 The element <***partno***>(see L.4.5.13) is used to enter the part number of the component/ assembly.

K.3.1.1.1.1.2.1.4 The element <***nsn***> (see L.4.5.12) is used to enter the national stock number of the component/assembly.

K.3.1.1.1.1.2.1.5 The element <***eic***> is used for an assigned end-item code of the equipment covered by the TM. When used, it appears as part of the prime title on the front cover and title block page.

a. DTD fragment for <***eic***>:

```
<!ELEMENT eic - o (#PCDATA)>
<!ATTLIST eic
          %refs;
          %secur;>
```

b. Attributes for <***eic***>:

1. **%REFS;** - Refer to common parameter entities for a complete description (see L.5.2).
2. **%SECUR;** - Refer to common parameter entities for a complete description (see L.5.3).

K.3.1.1.1.1.2.2 The element <***subject***> is used to enter some qualification of the equipment nomenclature, such as block numbers or serial number (***%text;***(see L.3.6) is available to enter inline formatting and contextual characteristics).

a. DTD fragment for <***subject***>:

```
<!ELEMENT subject - o (%text;)>
<!ATTLIST subject
          %refs;
          %secur;
          %navlink;
```

```
%nodeloc;>
```

b. Attributes for <***subject***>:

1. **%REFS;** - Refer to common parameter entities for a complete description (see L.5.2).
2. **%SECUR;** - Refer to common parameter entities for a complete description (see L.5.3).
3. **%NAVLINK;** - Refer to common parameter entities for a complete description (see L.5.8).
4. **%NODELOC;** - Refer to common parameter entities for a complete description (see L.5.9).

K.3.1.1.1.1.3 The element <***stitle***>represents a subtitle of the TM placed immediately below the prime title to indicate the volume number and contents of every separately bound volume of a TM (***%text;***(see L.3.6) is available to enter inline formatting and contextual characteristics).

a. DTD fragment for <***stitle***>:

```
<!ELEMENT stitle - o (%text;)>
<!ATTLIST stitle
          %refs;
          %secur;>
```

b. Attributes for <***stitle***>:

1. **%REFS;** - Refer to common parameter entities for a complete description (see L.5.2).
2. **%SECUR;** - Refer to common parameter entities for a complete description (see L.5.3).

K.3.1.1.1.2 The element <***graphic***>(see L.4.4.1.2) is used to enter a graphic on the front cover.

K.3.1.1.1.3 The element <***notices***>contains any notices that appear on the front cover, change sheet, or title block page of a TM. Specific notices that may be entered include: availability <***avail***>, supersedure <***super***>, disclosure <***disclos***>, distribution <***dist***>, exportation <***export***>, and destruction <***destr***>.

a. DTD fragment for <***notices***>:

```
<!ELEMENT notices - o (avail?, super?, disclos?, dist, export?, destr?)>
```

K.3.1.1.1.3.1 The element <***avail***> contains an optional title (<***title***>see L.4.1.5.1) followed by a paragraph of text (<***para***>see L.4.1.5.3). The paragraph may be entered using an entity reference to boilerplate text.

a. DTD fragment for <***avail***>:

```
<!ELEMENT avail - o (title?, para)>
<!ATTLIST avail
          %refs;
          %secur;>
```

b. Attributes for <***avail***>:

1. **%REFS;** - Refer to common parameter entities for a complete description (see L.5.2).
2. **%SECUR;** - Refer to common parameter entities for a complete description (see L.5.3).

K.3.1.1.1.3.2 The element <***super***> contains a paragraph of text (<***para***> see L.4.1.5.3).

a. DTD fragment for <***super***>:

```
<!ELEMENT super - o (para)>
<!ATTLIST super
          %refs;
          %secur;>
```

b. Attributes for <***super***>:

1. **%REFS;** - Refer to common parameter entities for a complete description (see L.5.2).
2. **%SECUR;** - Refer to common parameter entities for a complete description (see L.5.3).

K.3.1.1.1.3.3 The element <***disclos***> contains a paragraph of text (<***para***>see L.4.1.5.3). The paragraph may be entered using an entity reference to boilerplate text.

a. DTD fragment for <***disclos***>:

```
<!ELEMENT disclos - o (para)>
<!ATTLIST disclos
          %refs;
          %secur;>
```

b. Attributes for <***disclos***>:

1. **%REFS;** - Refer to common parameter entities for a complete description (see L.5.2).
2. **%SECUR;** - Refer to common parameter entities for a complete description (see L.5.3).

K.3.1.1.1.3.4 The element <***dist***> contains an optional title (<***title***>see L.4.1.5.1) followed by a paragraph of text (<***para***>see L.4.1.5.3). The paragraph may be entered using an entity reference to boilerplate text.

a. DTD fragment for <***dist***>:

```
<!ELEMENT dist - o (title?, para)>
<!ATTLIST dist
          %refs;
          %secur;>
```

b. Attributes for <***dist***>:

1. **%REFS;** - Refer to common parameter entities for a complete description (see L.5.2).
2. **%SECUR;** - Refer to common parameter entities for a complete description (see L.5.3).

K.3.1.1.1.3.5 The element <***export***> contains an optional title (<***title***>see L.4.1.5.1) followed by a paragraph of text (<***para***>see L.4.1.5.3). The paragraph may be entered using an entity reference to boilerplate text.

a. DTD fragment for <***export***>:

```
<!ELEMENT export - o (title?, para)>
<!ATTLIST export
          %refs;
          %secur;>
```

b. Attributes for <***export***>:

1. **%REFS;** - Refer to common parameter entities for a complete description (see L.5.2).
2. **%SECUR;** - Refer to common parameter entities for a complete description (see L.5.3).

K.3.1.1.1.3.6 The element <***destr***> contains a paragraph of text (<***para***>see L.4.1.5.3). The paragraph may be entered using an entity reference to boilerplate text.

a. DTD fragment for <***destr***>:

```
<!ELEMENT destr - o (para)>
<!ATTLIST destr
          %refs;
          %secur;>
```

b. Attributes for <***destr***>:

1. **%REFS;** - Refer to common parameter entities for a complete description (see L.5.2).
2. **%SECUR;** - Refer to common parameter entities for a complete description (see L.5.3).

K.3.1.1.1.4 The element <***servnomen***> is used for the service nomenclature of the proponent activity; for most Army manuals the text is "HEADQUARTERS, DEPARTMENT OF THE ARMY" (***%text;***(see L.3.6) is available to enter inline formatting and contextual characteristics).

a. DTD fragment for <***servnomen***>:

```
<!ELEMENT servnomen - o (%text;)>
<!ATTLIST servnomen
          %refs;
          %secur;>
```

b. Attributes for <***servnomen***>:

1. **%REFS;** - Refer to common parameter entities for a complete description (see L.5.2).
2. **%SECUR;** - Refer to common parameter entities for a complete description (see L.5.3).

K.3.1.1.1.5 The element <***chgno***> is used for the current change level of the document; the element appears on the front cover, on the change sheet, and on the title block page.

a. DTD fragment for <***chgno***>:

```
<!ELEMENT chgno - o (#PCDATA)>
<!ATTLIST chgno
          %refs;
          %secur;>
```

b. Attributes for <***chgno***>:

1. **%REFS;** - Refer to common parameter entities for a complete description (see L.5.2).
2. **%SECUR;** - Refer to common parameter entities for a complete description (see L.5.3).

K.3.1.1.1.6 The element <***chgdate***> is used for the effective date of a change to a publication. It appears on the front cover and title block page of the TM.

a. DTD fragment for <***chgdate***>:

```
<!ELEMENT chgdate - o (#PCDATA)>
<!ATTLIST chgdate
          %refs;
          %secur;>
```

b. Attributes for <***chgdate***>:

1. **%REFS;** - Refer to common parameter entities for a complete description (see L.5.2).
2. **%SECUR;** - Refer to common parameter entities for a complete description (see L.5.3).

K.3.1.1.2 The element <***warnsum***> warning summary appears in every manual on the first right-hand page after the front cover. It consists of warnings extracted from the text, general warnings and safety cautions which apply to the document, a key to hazard icons used in the TM, hazardous materials warnings, and first-aid information.

a. DTD fragment for <***warnsum***>:

```
<!ELEMENT warnsum - o (warnextrac?, (warninfo | hazmat)+) -(%vol.group)>
<!ATTLIST warnsum
          inschlvl    NUTOKENS    #IMPLIED
          delchlvl    NUTOKENS    #IMPLIED
          tocentry    %yesorno;   #IMPLIED
          %refs;
          %secur;>
```

b. Attributes for <***warnsum***>:

1. **INSCHLVL** - Specifies the change level(s) at which information was inserted. An audit trail can be maintained by listing multiple change levels separated by spaces.
2. **DELCHLVL** - Specifies the change level(s) at which information was deleted. An audit trail can be maintained by listing multiple change levels separated by spaces.
3. **TOCENTRY** - If other than zeros, the warning summary title (which is automatically generated by the FOSI) should be included in the table of contents.
4. **%REFS;** - Refer to common parameter entities for a complete description (see L.5.2).
5. **%SECUR;** - Refer to common parameter entities for a complete description (see L.5.3).

K.3.1.1.2.1 The element <***warnextrac***> is used for the warning summary of warnings that are extracted verbatim from the body of the TM chapters. The extractions are to be executed and the results edited for duplicates by the composition or presentation system.

a. DTD fragment for <***warnextrac***>:

```
<!ELEMENT warnextrac - o EMPTY>
```

K.3.1.1.2.2 The element <***warninfo***> is a portion of the warning summary that contains general-purpose warnings or cautions, such as radiation or laser light. It can also contain general safety instructions and first-aid information. It contains titles (<***title***> see L.4.1.5.1) followed by at least one paragraph of text<***para***>, warnings (<***warning***> see L.4.1.1.2), and/or cautions (<***caution***> see L.4.1.1.3).

a. DTD fragment for <***warninfo***>:

```
<!ELEMENT warninfo - o (((title, para+) | warning | caution)+)+>
<!ATTLIST warninfo
          %refs;
          %secur;>
```

b. Attributes for <***warninfo***>:

1. **%REFS;** - Refer to common parameter entities for a complete description (see L.5.2).
2. **%SECUR;** - Refer to common parameter entities for a complete description (see L.5.3).

K.3.1.1.2.3 The element <***hazmat***> is used for a section of the warning summary that contains explanations of any hazard icons <***haz-icons***> in the TM and descriptions of hazardous materials used in performing procedures in the TM.

a. DTD fragment for <***hazmat***>:

```
<!ELEMENT hazmat - o (haz-icons, hazard+)>
<!ATTLIST hazmat
          inschlvl    NUTOKENS    #IMPLIED
          delchlvl    NUTOKENS    #IMPLIED
          %refs;
          %secur;>
```

b. Attributes for <***hazmat***>:

1. **INSCHLVL** - Specifies the change level(s) at which information was inserted. An audit trail can be maintained by listing multiple change levels separated by spaces.
2. **DELCHLVL** - Specifies the change level(s) at which information was deleted. An audit trail can be maintained by listing multiple change levels separated by spaces.
3. **%REFS;** - Refer to common parameter entities for a complete description (see L.5.2).
4. **%SECUR;** - Refer to common parameter entities for a complete description (see L.5.3).

K.3.1.1.2.3.1 The element <***haz-icons***> represents the section of the warning summary that contains a key to any hazard icons to be used in the TM. It contains the symbol of the icon (<***symbol***> see L.4.4.2), followed by an optional title (<***title***> see L.4.1.5.1), and the description of the hazard <***hazdesc***>.

a. DTD fragment for <***haz-icons***>:

```
<!ELEMENT haz-icons - o (symbol, title?, hazdesc)+>
<!ATTLIST haz-icons
          inschlvl   NUTOKENS   #IMPLIED
          delchlvl   NUTOKENS   #IMPLIED
          %refs;
          %secur;>
```

b. Attributes for <***haz-icons***>:

1. **INSCHLVL** - Specifies the change level(s) at which information was inserted. An audit trail can be maintained by listing multiple change levels separated by spaces.

2. **DELCHLVL** - Specifies the change level(s) at which information was deleted. An audit trail can be maintained by listing multiple change levels separated by spaces.
3. **%REFS;** - Refer to common parameter entities for a complete description (see L.5.2).
4. **%SECUR;** - Refer to common parameter entities for a complete description (see L.5.3).

K.3.1.1.2.3.1.1 The element <***hazdesc***> is used for a description of the hazardous condition associated with a hazard icon (***%text;***(see L.3.6) is available to enter inline formatting and contextual characteristics).

a. DTD fragment for <***hazdesc***>:

```
<!ELEMENT hazdesc - o (%text;)>
<!ATTLIST hazdesc
          inschlvl    NUTOKENS    #IMPLIED
          delchlvl    NUTOKENS    #IMPLIED
          %refs;
          %secur;>
```

b. Attributes for <***hazdesc***>:

1. **INSCHLVL** - Specifies the change level(s) at which information was inserted. An audit trail can be maintained by listing multiple change levels separated by spaces.
2. **DELCHLVL** - Specifies the change level(s) at which information was deleted. An audit trail can be maintained by listing multiple change levels separated by spaces.
3. **%REFS;** - Refer to common parameter entities for a complete description (see L.5.2).
4. **%SECUR;** - Refer to common parameter entities for a complete description (see L.5.3).

K.3.1.1.2.3.2 The element <***hazard***> is used to identify a hazardous material warning appearing in the warning summary. it contains the identification information <***hazid***>, one or more symbols (<***symbol***> see L.4.4.2)are used to enter the icon, and at least one paragraph (<***para***> see L.4.1.5.3) describing the hazard, if necessary.

a. DTD fragment for <***hazard***>:

```
<!ELEMENT hazard - o (hazid, symbol+, para*)+>
<!ATTLIST hazard
          inschlvl    NUTOKENS    #IMPLIED
          delchlvl    NUTOKENS    #IMPLIED
          tocentry    %yesorno;   #IMPLIED
          %refs;
          %secur;>
```

b. Attributes for <***hazard***>:

1. **INSCHLVL** - Specifies the change level(s) at which information was inserted. An audit trail can be maintained by listing multiple change levels separated by spaces.
2. **DELCHLVL** - Specifies the change level(s) at which information was deleted. An audit trail can be maintained by listing multiple change levels separated by spaces.
3. **TOCENTRY** - If other than zeros, the hazard should be included in the table of contents.
4. **%REFS;** - Refer to common parameter entities for a complete description (see L.5.2).

5. **%SECUR;** - Refer to common parameter entities for a complete description (see L.5.3).

K.3.1.1.2.3.2.1 The element <***hazid***> is used for the name or other identification of a hazardous material (***%text;***(see L.3.6) is available to enter inline formatting and contextual characteristics).

a. DTD fragment for <***hazid***>:

```
<!ELEMENT hazid - o (%text;)>
<!ATTLIST hazid
          inschlvl    NUTOKENS    #IMPLIED
          delchlvl    NUTOKENS    #IMPLIED
          %refs;
          %secur;>
```

b. Attributes for <***hazid***>:

1. **INSCHLVL** - Specifies the change level(s) at which information was inserted. An audit trail can be maintained by listing multiple change levels separated by spaces.
2. **DELCHLVL** - Specifies the change level(s) at which information was deleted. An audit trail can be maintained by listing multiple change levels separated by spaces.
3. **%REFS;** - Refer to common parameter entities for a complete description (see L.5.2).
4. **%SECUR;** - Refer to common parameter entities for a complete description (see L.5.3).

K.3.1.1.3 The list of effective pages work package <***loepwp***>is used for listing the latest work packages in the TM and prepared along with the basic version of the TM and each subsequent revision. The <***loepwp***> is located immediately following the warning summary. It contains a note (<***note***> see L.4.1.1.4), at least one revision date <***rev.date***>, and at least one revision change <***rev.chg***>.

a. DTD fragment for <***loepwp***>:

```
<!ELEMENT loepwp - o (note, rev.date+, rev.chg+)>
```

K.3.1.1.3.1 The element <***rev.date***> contains the list of effective work packages revision date information. It contains a required title (<***title***> see L.4.1.5.1), the revision number <***rev.no***>, and the date <***date***>.

a. DTD fragment for <***rev.date***>:

```
<!ELEMENT rev.date - o (title, rev.no, date)>
```

K.3.1.1.3.1.1 The element <***rev.no***> contains the list of effective work packages revision number release.

a. DTD fragment for <***rev.no***>:

```
<!ELEMENT rev.no - o EMPTY>
<!ATTLIST rev.no
          no   NUMBER  #REQUIRED>
```

b. Attributes for <***rev.no***>:

1. **NO** - List of effective work packages revision number release.

K.3.1.1.3.1.2 The element <***date***> is used to enter the date of the revision (***%text;***(see L.3.6) is available to enter inline formatting and contextual characteristics).

a. DTD fragment for <***date***>:

```
<!ELEMENT date - o (%text;)>
<!ATTLIST date
          %bodyatt;
          %secur;>
```

b. Attributes for <***date***>:

1. **%BODYATT;** - Refer to common parameter entities for a complete description (see L.5.1).
2. **%SECUR;** - Refer to common parameter entities for a complete description (see L.5.3).

K.3.1.1.3.2 The element <***rev.chg***> contains the revision information work package title and revision change number for the list of effective work packages. It contains a required title (<***title***>see L.4.1.5.1) followed by the revision number (<***rev.no***> see K.3.1.1.3.1.1)

a. DTD fragment for <***rev.chg***>:

```
<!ELEMENT rev.chg - o (title, rev.no)>
<!ATTLIST rev.chg
          %refs;>
```

b. Attributes for <***rev.chg***>:

1. **%REFS;** - Refer to common parameter entities for a complete description (see L.5.2).

K.3.1.1.4 The element <***chgsheet***> change sheet is required to appear in a changed document. This sheet contains elements explicitly placed in the document (it is not required to be generated by the system, as the Table of Contents must be). The purpose of the change sheet is to list the reason(s) for the change to the data and to provide a table designating which pages are to be removed and which are to be inserted. It contains a change number (<***chgno***> see K.3.1.1.1.5), the address <***address***>, the primary title (<***prtitle***> see K.3.1.1.1.1.2), optional notices (<***notices***> see K.3.1.1.1.3), at least one paragraph of text <***para***>, and a list of changes <***chglist***>.

a. DTD fragment for <***chgsheet***>:

```
<!ELEMENT chgsheet - o (chgno, address, prtitle, notices?, para+,
                        chglist) -(%vol.group)>
<!ATTLIST chgsheet
          date        CDATA       #IMPLIED
          %refs;
          %secur;>
```

b. Attributes for <***chgsheet***>:

1. **%REFS;** - Refer to common parameter entities for a complete description (see L.5.2).
2. **%SECUR;** - Refer to common parameter entities for a complete description (see L.5.3).
3. **DATE** - The date of the current version of the element.

K.3.1.1.4.1 The element <***address***> is used to enter the address. it contains the service nomenclature (<***servnomen***> see K.3.1.1.1.4), and the city and state <***city-state***>.

a. DTD fragment for <***address***>:

```
<!ELEMENT address - o (servnomen, city-state)>
<!ATTLIST address
          %refs;
          %secur;>
```

b. Attributes for <***address***>:

1. **%REFS;** - Refer to common parameter entities for a complete description (see L.5.2).
2. **%SECUR;** - Refer to common parameter entities for a complete description (see L.5.3).

K.3.1.1.4.1.1 The element <***city-state***> is used to enter the city and state (***%text;***(see L.3.6) is available to enter inline formatting and contextual characteristics).

a. DTD fragment for <***city-state***>:

```
<!ELEMENT city-state - o (%text;)>
<!ATTLIST city-state
          %refs;>
```

b. Attributes for <***city-state***>:

1. **%REFS;** - Refer to common parameter entities for a complete description (see L.5.2).

K.3.1.1.4.2 The element <***chglist***> contains the list of changed pages and work packages appearing on the change sheet. After a paragraph of text (<***para***> see L.4.1.5.3), it lists which pages of the existing manual are to be removed <***removepg***>and which pages shipped with the current change are to be inserted <***insertpg***>. It may also include a list of work packages to be added/deleted <***chgwp***>.

a. DTD fragment for <***chglist***>:

```
<!ELEMENT chglist - o ((para, (removepg, insertpg)+)?, chgwp*)>
<!ATTLIST chglist
          %refs;
          %secur;>
```

b. Attributes for <***chglist***>:

1. **%REFS;** - Refer to common parameter entities for a complete description (see L.5.2).
2. **%SECUR;** - Refer to common parameter entities for a complete description (see L.5.3).

K.3.1.1.4.2.1 The element <***removepg***> is used to enter the pages to be removed from the manual (***%text;***(see L.3.6) is available to enter inline formatting and contextual characteristics).

a. DTD fragment for <***removepg***>:

```
<!ELEMENT removepg - o (%text;)>
<!ATTLIST removepg
```

```
          %refs;
          %secur;>
```

b. Attributes for <***removepg***>:

1. **%REFS;** - Refer to common parameter entities for a complete description (see L.5.2).
2. **%SECUR;** - Refer to common parameter entities for a complete description (see L.5.3).

K.3.1.1.4.2.2 The element <***insertpg***> is used to enter the pages to be inserted into the manual (***%text;***(see L.3.6) is available to enter inline formatting and contextual characteristics).

a. DTD fragment for <***insertpg***>:

```
<!ELEMENT insertpg - o (%text;)>
<!ATTLIST insertpg
          %refs;
          %secur;>
```

b. Attributes for <***insertpg***>:

1. **%REFS;** - Refer to common parameter entities for a complete description (see L.5.2).
2. **%SECUR;** - Refer to common parameter entities for a complete description (see L.5.3).

K.3.1.1.4.2.3 The element <***chgwp***> is used to enter work packages to be replaced, added, or deleted from the manual. It contains a paragraph of text (<***para***> see L.4.1.5.3) and work package number <***wpno***>.

a. DTD fragment for <***chgwp***>:

```
<!ELEMENT chgwp - o (para, wpno)>
<!ATTLIST chgwp
          type      (replace | add | delete)          #REQUIRED>
```

b. Attributes for <***chgwp***>:

1. **TYPE** - Type of change.
   (a) “REPLACE” - Specifies the work package is to be replaced.
   (b) “ADD” - Specifies the work package is to be added
   (c) “DELETE” - Specifies the work package is to be deleted.

K.3.1.1.4.2.3.1 The element <***wpno***> contains the work package number.

a. DTD fragment for <***wpno***>:

```
<!ELEMENT wpno - o (#PCDATA)>
<!ATTLIST wpno
          %refs;
          %secur;>
```

b. Attributes for <***wpno***>:

1. **%REFS;** - Refer to common parameter entities for a complete description (see L.5.2).

2. **%SECUR;** - Refer to common parameter entities for a complete description (see L.5.3).

K.3.1.1.5 The element <***titleblk***> is used for title block material in the TM's front matter and repeats identifying information from the front cover, including the primary title (<***prtitle***> see K.3.1.1.1.1.2), an optional subtitle (<***stitle***> see K.3.1.1.1.1.3), the Reporting Errors statement <***reporting***>, any notices (<***notices***> see K.3.1.1.1.3), the service nomenclature (<***servnomen***> see K.3.1.1.1.4), and, if applicable, a change number (<***chgno***> see K.3.1.1.1.5) and change date (<***chgdate***> see K.3.1.1.1.6).

a. DTD fragment for <***titleblk***>:

```
<!ELEMENT titleblk - o (prtitle, stitle?, reporting, notices?,
                        servnomen, (chgno, chgdate)?) -(%vol.group)>
<!ATTLIST titleblk
          supplement (none | routine | ss| os) "none"
          %refs;
          %secur;>
```

b. Attributes for <***titleblk***>:

1. **SUPPLEMENT** - Optional attributes for supplementary manual. The default value is "none".
   (a) "NONE" - Specifies there is no supplement. This is the default.
   (b) "ROUTINE" - Specifies supplement is routine.
   (c) "SS" - Specifies a safety supplement.
   (d) "OS" - Specifies an operational supplement.
2. **%REFS;** - Refer to common parameter entities for a complete description (see L.5.2).
3. **%SECUR;** - Refer to common parameter entities for a complete description (see L.5.3).

K.3.1.1.5.1 The element <***reporting***> is used to enter the reporting errors and recommending improvements statement. It contains a paragraph of text (<***para***> see L.4.1.5.3). The paragraph may be entered using an entity reference to boilerplate text

a. DTD fragment for <***reporting***>:

```
<!ELEMENT reporting - o (para)>
<!ATTLIST reporting
          %refs;
          %secur;>
```

b. Attributes for <***reporting***>:

1. **%REFS;** - Refer to common parameter entities for a complete description (see L.5.2).
2. **%SECUR;** - Refer to common parameter entities for a complete description (see L.5.3).

K.3.1.1.6 The element <***contents***>is used for the TM's table of contents, which must be generated by the presentation or composition system according to the extraction rules found in the FOSI.

a. DTD fragment for <***contents***>:

```
<!ELEMENT contents - o EMPTY>
<!ATTLIST contents
```

```
        %refs;
        %secur;>
```

b. Attributes for <***contents***>:

1. **%REFS;** - Refer to common parameter entities for a complete description (see L.5.2).
2. **%SECUR;** - Refer to common parameter entities for a complete description (see L.5.3).

K.3.1.1.7 The element <***howtouse***>"How to Use This Manual" is used for any special section or detailed information on how to read and use the TM; appears as the last element in the front matter of the TM. This section contains paragraphs of text that may be grouped into sections or subsections (***%titldtext;*** see L.3.3) and/or procedural text (<***proc***> see L.4.1.8.1). The element <***helplink***> (see F.5.2) may be entered within this element.

a. DTD fragment for <***howtouse***>:

```
<!ELEMENT howtouse - o (%titldtext; | proc )+ -(%vol.group) +(helplink)>
<!ATTLIST howtouse
        %refs;
        %secur;>
```

b. Attributes for <***howtouse***>:

1. **%REFS;** - Refer to common parameter entities for a complete description (see L.5.2).
2. **%SECUR;** - Refer to common parameter entities for a complete description (see L.5.3).

K.3.1.2 The element <***gim***> (see MIL-STD-2361(SC) GIM Chapter SGML Elements) is used to enter the general information chapter.

K.3.1.3 The element <***opim***>(see MIL-STD-2361(SC) OPIM Chapter SGML Elements)is used to enter the operator's instruction information chapter.

K.3.1.4 The element <***mim***> (see MIL-STD-2361(SC) MIM Chapter SGML Elements) is used to enter the maintenance information chapter.

K.3.1.5 The element <***tim***> (see MIL-STD-2361(SC) TIM Chapter SGML Elements) is used to enter the troubleshooting information chapter.

K.3.1.6 The element <***sim***>(see MIL-STD-2361(SC) SIM Chapter SGML Elements) is used to enter the supporting information chapter.

K.3.1.7 The element <***pim***> (see MIL-STD-2361(SC) PIM Chapter SGML Elements) is used to enter the parts information chapter.

K.3.1.8 **Rear Matter <*rear*>.** The rear or back matter of a TM. It may consist of a glossary <***glossary***>, alphabetic index <***aindx***>, foldout (oversize) illustration section <***foldsect***>, DA-2028 forms <***da2028***>, authentication page <***authent***>, and a metric conversion chart <***back***>. Only the authentication page and metric conversion chart are required. The rear matter element <***rear***> consist of the following elements:

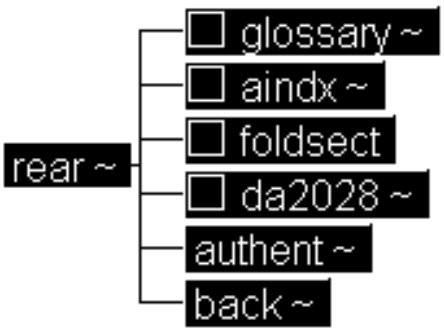

Figure 109 Rear Matter DTD Hierarchy

a. DTD fragment for <***rear***>:

```
<!ELEMENT rear - - (glossary?, aindx?, foldsect?, da2028?, authent,
                    back)>
<!ATTLIST rear
          %refs;
          %secur;>
```

b. Attributes for <***rear***>:

1. **%REFS;** - Refer to common parameter entities for a complete description (see L.5.2).
2. **%SECUR;** - Refer to common parameter entities for a complete description (see L.5.3).

K.3.1.8.1 The element <***glossary***>is used for a glossary of terms and definitions contained in the rear matter of a TM. It contains a definition list (<***deflist***> see L.4.1.2.3).

a. DTD fragment for <***glossary***>:

```
<!ELEMENT glossary - o (deflist)>
<!ATTLIST glossary
          %refs;
          %secur;>
```

b. Attributes for <***glossary***>:

1. **%REFS;** - Refer to common parameter entities for a complete description (see L.5.2).
2. **%SECUR;** - Refer to common parameter entities for a complete description (see L.5.3).

K.3.1.8.1.1 The element <***aindx***> is used for an alphabetical index of subjects that may be useful to the TM user; appears in the rear matter of the TM. This index is automatically generated when elements to appear in the index have been properly tagged within the instance.

a. DTD fragment for <***aindx***>:

```
<!ELEMENT aindx - o EMPTY>
<!ATTLIST aindx
```

```
            %refs;
            %secur;>
```

b. Attributes for <***aindx***>:

1. **%REFS;** - Refer to common parameter entities for a complete description (see L.5.2).
2. **%SECUR;** - Refer to common parameter entities for a complete description (see L.5.3).

K.3.1.8.1.2 The element <***foldsect***> foldout section is used in the rear matter of the TM containing foldout (oversize) illustrations. Figures that appear in this section have been extracted from the body of the manual because the associated attribute "figtype" on the element figure indicated "fo-rear." This extraction is described in the FOSI.

a. DTD fragment for <***foldsect***>:

```
<!ELEMENT foldsect - o EMPTY>
```

K.3.1.8.1.3 The element <***da2028***> DA 2028-2 for reporting errors and recommending equipment improvements appears in the TM rear matter as a blank form and as an example of a filled-in form. It is entered using the associated attribute “boardno”.

a. DTD fragment for <***da2028***>:

```
<!ELEMENT da2028 - o EMPTY>
<!ATTLIST da2028
          boardno ENTITY  #REQUIRED
          %refs;
          %secur;>
```

b. Attributes for <***da2028***>:

1. **BOARDNO**- Specifies the name of the entity containing the graphic file of the form.
2. **%REFS;** - Refer to common parameter entities for a complete description (see L.5.2).
3. **%SECUR;** - Refer to common parameter entities for a complete description (see L.5.3).

K.3.1.8.1.4 The element <***authent***> is used for the authentication page provided by the contracting activity. It is entered using the associated attribute “boardno”.

a. DTD fragment for <***authent***>:

```
<!ELEMENT authent - o EMPTY>
<!ATTLIST authent
          boardno ENTITY  #REQUIRED
          %refs;
          %secur;>
```

b. Attributes for <***authent***>:

1. **BOARDNO**- Specifies the name of the entity containing the graphic file of the page.
2. **%REFS;** - Refer to common parameter entities for a complete description (see L.5.2).
3. **%SECUR;** - Refer to common parameter entities for a complete description (see L.5.3).

K.3.1.8.1.5 The element <***back***> is used for back cover of a TM. The inside back cover may contain a metric conversion chart; the outside must be blank, except for pocket manuals. It is entered using the associated attribute "boardno".

a. DTD fragment for <***back***>:

```
<!ELEMENT back - o EMPTY>
<!ATTLIST back
          boardno ENTITY  #REQUIRED
          %refs;
          %secur;>
```

b. Attributes for <***back***>:

1. **BOARDNO**- Specifies the name of the entity containing the graphic file of the metric conversion chart.
2. **%REFS;** - Refer to common parameter entities for a complete description (see L.5.2).
3. **%SECUR;** - Refer to common parameter entities for a complete description (see L.5.3).

K.3.1.9 **Repair Parts and Special Tools List Front Matter <*rpstlfrnt*>.** The element <***rpstlfrnt***> front matter contained in a Repair Parts and Special Tool List Manual. Such a manual contains only the RPSTL with no maintenance or operator material. The element <***rpstlfrnt***> consist of the following elements:

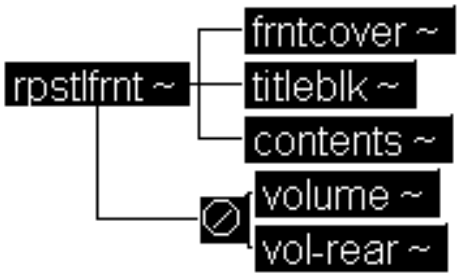

Figure 110 Repair Parts and Special Tools List Front Matter DTD Hierarchy

a. DTD fragment for <***rpstlfmt***>:

```
<!ELEMENT rpstlfrnt - - (frntcover, titleblk, contents) -(%vol.group;)>
<!ATTLIST rpstlfrnt
          %refs;
          %secur;>
```

b. Attributes for <***rpstlfmt***>:

1. **%REFS;** - Refer to common parameter entities for a complete description (see L.5.2).
2. **%SECUR;** - Refer to common parameter entities for a complete description (see L.5.3).

K.3.1.9.1 The element <***frntcover***> (see K.3.1.1.1) is used to enter the front cover of the RPSTL manual.

K.3.1.9.2 The element <***titleblk***> (see K.3.1.1.5)is used to enter the title block information in the RPSTL manual.

K.3.1.9.3 The element <***contents***> (see K.3.1.1.6) is used to enter the table of contents in the RPSTL manual.

K.3.1.10 **Volume <*volume*>.** An element containing the front matter for a volume in a multi-volume manual, including the front cover <***frntcover***>, warning summary <***warnsum***>, change sheet <***chgsheet***>, title block <***titleblk***>, table of contents <***contents***>, and "How to Use" <***howtouse***>. The front cover, title block and table of contents are the only required elements. The element <***volume***> is used to insert the front matter only, not to indicate a containment relationship relative to surrounding TM body matter.

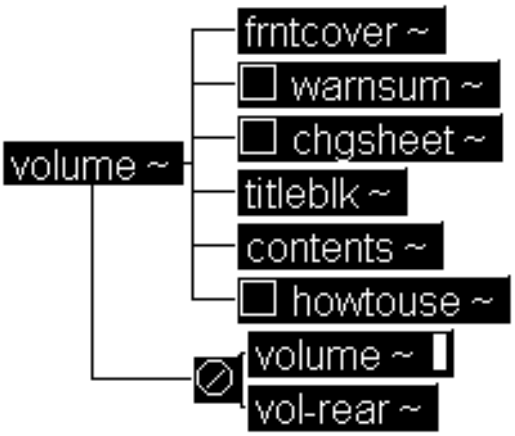

Figure 111 DTD Hierarchy for Volume

a. DTD fragment for <***volume***>:

```
<!ELEMENT volume - - (frntcover, warnsum?, chgsheet?, titleblk,
                      contents, howtouse?) -(%vol.group)>
<!ATTLIST volume
          tmno          CDATA                     #REQUIRED
          revno         NUMBER                    #REQUIRED
          maintitl      CDATA                     #REQUIRED
          maintlvls     NAMES                     #REQUIRED
          eic           CDATA                     #REQUIRED
          date          CDATA                     #REQUIRED
          imlevel       (depot | operator |
                         gensup | dirsup |
                         unitlvl | inter |
                         avum-avim | tmlvls)     #REQUIRED
          syslevel      (enditem | func-system)  "enditem"
          system-title  CDATA                     #IMPLIED
          %refs;
          %secur;>
```

b. Attributes for <***volume***>:

1. **TMNO** - The number of the current TM. The prefix TM must be included in the attribute value.

2. **REVNO** - The overall revision number for the volume.
3. **MAINTITL** - Supplies a literal version of the maintenance-level title.
4. **MAINTLVLS** - Specifies the maintenance level(s) authorized to use this manual; this attribute value is used in the FOSI to supply the literal expression of the TM's maintenance level.
5. **EIC** - The end-item code of the equipment covered in the TM.
6. **DATE** - The date of the current version of the element.
7. **IMLEVEL** - The maintenance level of the volume.
   (a) "OPERATOR" - Applies to operator maintenance level.
   (b) "UNITLVL" - Applies to unit maintenance level.
   (c) "DIRSUP" - Applies to direct support (DS) maintenance level.
   (d) "GENSUP" - Applies to general support (GS) maintenance level.
   (e) "INTER" - Applies to intermediate (DS/GS) maintenance level.
   (f) "DEPOT" - Applies to depot maintenance level.
   (g) "AVUM-AVIM" - Applies to aviation unit (AVUM) and intermediate (AVIM) maintenance level.
   (h) "TMLVLS" - Applies to all maintenance levels.
8. **SYSLEVEL** - Specifies whether the volume constituents cover the full end item ("ENDITEM") or a particular functional system ("FUNC-SYSTEM") within the end item. When the value is not entered for the attribute "SYSLEVEL", the default value is "ENDITEM".
9. .**SYSTEM-TITLE** - If the attribute value of "SYSLEVEL" is "FUNC-SYSTEM," this attribute is used to identify the functional system which the volume covers.
10. **%REFS;** - Refer to common parameter entities for a complete description (see L.5.2).
11. **%SECUR;** - Refer to common parameter entities for a complete description (see L.5.3).

K.3.1.10.1 The element **<*frntcover*>** (see K.3.1.1.1) is used to enter the front cover of the volume.

K.3.1.10.2 The element **<*warnsum*>** (see K.3.1.1.2) is used to enter the warning summary for the volume.

K.3.1.10.3 The element **<*chgsheet*>** (see K.3.1.1.4) is used to enter the change sheet for the volume.

K.3.1.10.4 The element **<*titleblk*>**(see K.3.1.1.5) is used to enter the title block of the volume.

K.3.1.10.5 The element **<*contents*>** (see K.3.1.1.6) is used to enter the table of contents for the volume.

K.3.1.10.6 The element **<*howtouse*>** (see K.3.1.1.7) is used to enter the "How to Use" section for the volume.

K.3.1.11 **Volume Rear <*vol-rear*>.** This is element is used for rear or back matter of a volume in a multi-volume manual. This element is used to insert the volume's rear matter only, not to indicate a containment relationship relative to surrounding TM body matter.

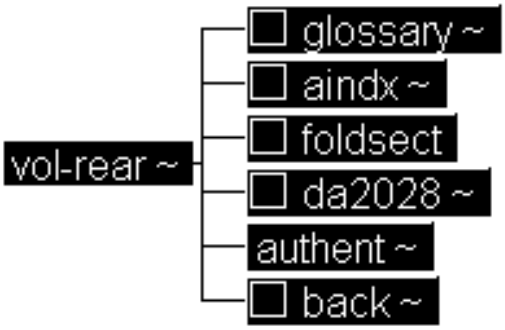

Figure 112 DTD Hierarchy for Volume Rear

a. DTD fragment for <***vol-rear***>:

```
<!ELEMENT vol-rear - - (glossary?, aindx?, foldsect?, da2028?, authent,
                        back?)>
<!ATTLIST vol-rear
          tmno            CDATA       #REQUIRED
          revno           NUMBER      #REQUIRED
          date            CDATA       #REQUIRED
          %refs;
          %secur;>
```

b. Attributes for <***vol-rear***>:

1. **TMNO** - The number of the current TM. The prefix TM must be included in the attribute value.
2. **REVNO** - The overall revision number.
3. **DATE** - The date of the current version of the element.
4. **%REFS;** - Refer to common parameter entities for a complete description (see L.5.2).
5. **%SECUR;** - Refer to common parameter entities for a complete description (see L.5.3).

K.3.1.11.1 The element <***glossary***> (see K.3.1.8.1) is used to enter the glossary of the volume.

K.3.1.11.2 The element <***aindx***> (see K.3.1.8.1.1) is used to enter the alphabetical index of the volume.

K.3.1.11.3 The element <***foldsect***> (see K.3.1.8.1.2) is used to enter the foldout section of the volume.

K.3.1.11.4 The element <***da2028***> (see K.3.1.8.1.3) is used to enter the appropriate form for the volume.

K.3.1.11.5 The element <***authent***> (see K.3.1.8.1.4) is used to enter the authenticity page for the volume.

K.3.1.11.6 The element <***back***> (see K.3.1.8.1.5) is used to enter the metric conversion chart on the back cover of the volume.

K.3.2 **Specialized Aviation Information Module or Work Package <*aviation*>.** This element <***aviation***> contains specialized aviation manuals that do not share the structure and contents of maintenance TMs. The element <***aviation***> consists of the following elements:

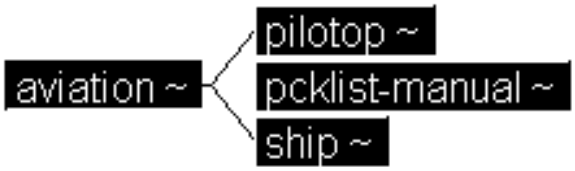

Figure 113 Aviation DTD Hierarchy

a. a. DTD fragment for <***aviation***>:

```
<!ELEMENT aviation - - (pilotop | pcklist-manual | ship)>
<!ATTLIST aviation
          aircraft CDATA #REQUIRED>
```

b. Attributes for <***aviation***>:

1. **AIRCRAFT** - The aircraft to which the specialized manual applies.

K.3.2.1 The element <***pilotop***> is used for the preparation of aircraft operator's instructions. This element contains the contents of an aircraft operator's technical manual. It includes the front matter <***frnt***>, pilot operator's information chapter <***pilot-opim***>, supporting information chapter <***sim***>, and rear matter <***rear***>.

a. DTD fragment for <***pilotop***>:

```
<!ELEMENT pilotop - - (frnt, pilot-opim, sim, rear) +(volume|vol-rear) >
<!ATTLIST pilotop
          revno       NUMBER    #REQUIRED
          maintitl    CDATA     #REQUIRED
          maintlvls   NAMES     #REQUIRED
          %rsrc-values;
          date        CDATA     #REQUIRED
          tmno        CDATA     #REQUIRED
          %refs;
          %secur; >
```

b. Attributes for <***pilotop***>:

1. **REVNO** - The overall revision number for the volume.
2. **MAINTITL** - Supplies a literal version of the maintenance-level title.
3. **MAINTLVLS** - Specifies the maintenance level(s) authorized to use this manual; this attribute value is used in the FOSI to supply the literal expression of the TM's maintenance level.
4. **%RSRC-VALUES;** - This attribute set supplies document-wide format and referencing format default values; applicable to composed paper manuals only. These attributes are attached only to the top element of the document. Attributes of the same name at the IM or work package level override the document-wide values.
5. **DATE** - The date of the current version of the element.
6. **TMNO** - The number of the current TM. The prefix TM must be included in the attribute value.

7. **%REFS;** - Refer to common parameter entities for a complete description (see L.5.2).
8. **%SECUR;** - Refer to common parameter entities for a complete description (see L.5.3).

K.3.2.1.1 The element <***frnt***> (see K.3.1.1) is used to enter the front matter.

K.3.2.1.2 The element <***pilot-opim***> is the main body of an aircraft operator's TM. Information on <***pilot-opim***> will be supplied in a later revision of this handbook.

K.3.2.1.3 The element <***sim***> (see MIL-STD-2361(SC) SIM Chapter SGML Elements) is the supporting information chapter.

K.3.2.1.4 The element <***rear***> (see K.3.1.8) is used to enter the rear matter.

K.3.2.2 The element <***pcklist-manual***> is used for the preparation of Pilot's Checklist. This element contains the contents, including front and rear matter, of a Pilot's Checklist TM.

a. DTD fragment for <***pcklist-manual***>:

```
<!ELEMENT pcklist-manual - - (frnt, pilot-opim, rear)
                              +(volume|vol-rear)>
<!ATTLIST pcklist-manual
          revno       NUMBER   #REQUIRED
          maintitl    CDATA    #REQUIRED
          maintlvls   NAMES    #REQUIRED
          %rsrc-values;
          date        CDATA    #REQUIRED
          tmno        CDATA    #REQUIRED
          %refs;
          %secur; >
```

b. Attributes for <***pcklist-manual***>:

1. **REVNO** - The overall revision number for the manual.
2. **MAINTITL** - Supplies a literal version of the maintenance-level title.
3. **MAINTLVLS** - Specifies the maintenance level(s) authorized to use this manual; this attribute value is used in the FOSI to supply the literal expression of the TM's maintenance level.
4. **%RSRC-VALUES;** - This attribute set supplies document-wide format and referencing format default values; applicable to composed paper manuals only. These attributes are attached only to the top element of the document. Attributes of the same name at the IM or work package level override the document-wide values.
5. **DATE** - The date of the current version of the element.
6. **TMNO** - The number of the current TM. The prefix TM must be included in the attribute value.
7. **%REFS;** - Refer to common parameter entities for a complete description (see L.5.2).
8. **%SECUR;** - Refer to common parameter entities for a complete description (see L.5.3).

K.3.2.2.1 The element <***frnt***> (see K.3.1.1) is used to enter the front matter.

K.3.2.2.2 The element <***pilot-opim***> is the main body of an aircraft operator's TM. Information on <***pilot-opim***> will be supplied in a later revision of this handbook.

K.3.2.3

K.3.2.3.1 The element <***rear***> (see K.3.1.8) is used to enter the rear matter.

K.3.2.4 The element <***ship***> is used for preparation of Aircraft for Shipping TM. This element contains the contents, including front and rear matter, of a shipping manual for Army aircraft. Information on <***ship***> will be supplied in a later revision of this handbook.

K.3.2.5 The element volume <***volume***> (see K.3.1.10) is used to indicate a volume.

K.3.2.6 The element <***vol-rear***> (see K.3.1.11) is used to indicate the rear matter of a volume.

K.3.3 **Technical Manual Supplements <*supplement*>.** The element <***supplement***> contains one of several types of supplementary manuals to another TM. A supplement may contain additional or revised operational procedures, safety warnings or instructions, or other information not included in the associated TM. A supplement must refer to the associated TM on its front cover and reproduce the identical distribution notice that appears on the main TM. The element <***supplement***> consists of the following elements:

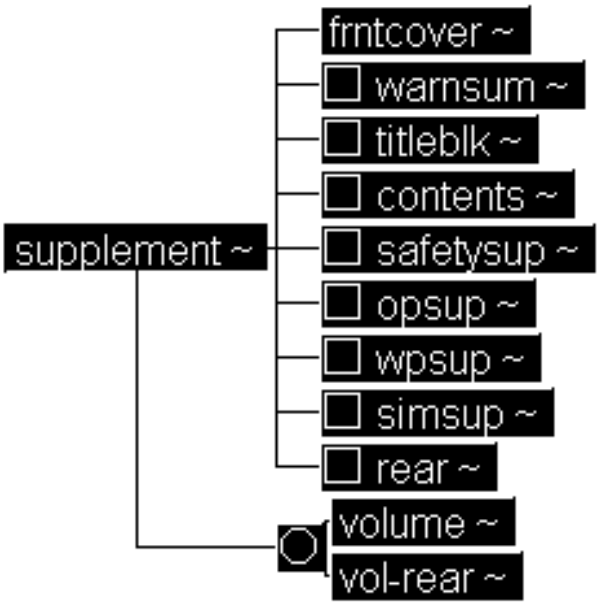

Figure 114 Supplement DTD Hierarchy

a. DTD fragment for <***supplement***>:

```
<!ELEMENT supplement - - (frntcover, warnsum?, titleblk?, contents?,
                          safetysup?, opsup?, wpsup?, simsup?, rear?)
                          +(%vol.group;) >
<!ATTLIST supplement
          revno         NUMBER     #REQUIRED
          maintitl      CDATA      #REQUIRED
          maintlvls     NAMES      #REQUIRED
          %rsrc-values;
          date          CDATA      #REQUIRED
```

```
tmnoref       CDATA      #REQUIRED
distribref    ENTITY     #REQUIRED
%refs;
%secur;>
```

b. Attributes for <***supplement***>:

1. **REVNO** - The overall revision number for the manual.
2. **MAINTITL** - Supplies a literal version of the maintenance-level title.
3. **MAINTLVLS** - Specifies the maintenance level(s) authorized to use this manual; this attribute value is used in the FOSI to supply the literal expression of the TM's maintenance level.
4. **%RSRC-VALUES;** - This attribute set supplies document-wide format and referencing format default values; applicable to composed paper manuals only. These attributes are attached only to the top element of the document. Attributes of the same name at the IM or work package level override the document-wide values.
5. **DATE** - The date of the current version of the element.
6. **TMNOREF** - Supplies a reference to the associated TM.
7. **DISTRIBREF** - An entity name for the distribution statement to appear on the supplement's cover; must match the distribution statement on the associated TM.
8. **%REFS;** - Refer to common parameter entities for a complete description (see L.5.2).
9. **%SECUR;** - Refer to common parameter entities for a complete description (see L.5.3).

K.3.3.1 The element <***frntcover***> (see K.3.1.1.1) is used to enter the front cover of the supplement.

K.3.3.2 The element <***warnsum***> (see K.3.1.1.2) is used to enter the warning summary of the supplement.

K.3.3.3 The element <***titleblk***>(see K.3.1.1.5) is used to enter the titleblock of the supplement..

K.3.3.4 The element <***contents***>(see K.3.1.1.6) is used to enter the table of contents for the supplement.

K.3.3.5 The element <***safetysup***> is used for supplementary manual containing special safety instructions. It contains a required title (<***title***> see L.4.1.3.8), optional paragraphs of text (<***para***> see L.4.1.5.3), alert notices (see L.3.2), paragraphs of text that may be grouped into sections or subsections (***%titldtext;*** see L.3.3), <***fltsafety***> for aviation manuals, emergency procedures <***emergency***>, and/or operational tasks containing procedures for interim nuclear, biological and chemical (NBC) decontamination<***decon***>. The <***safetysup***> is also used for advisories pertaining to the equipment or procedures in the TM to which the manual is a supplement.

a. DTD fragment for <***safetysup***>:

```
<!ELEMENT safetysup - - (title, para*, ((%alert;) | (%titldtext;)+ |
                         fltsafety | emergency | decon)+) >
<!ATTLIST safetysup
          %navlink;
          %bodyatt;
          %secur;>
```

b. Attributes for <***safetysup***>:

1. **%NAVLINK;** - Refer to common parameter entities for a complete description (see L.5.8).

2. **%BODYATT;** - Refer to common parameter entities for a complete description (see L.5.1).
3. **%SECUR;** - Refer to common parameter entities for a complete description (see L.5.3).

K.3.3.5.1 The element <***fltsafety***> is used to enter safety requirements for flight. It containsparagraphs of text that may be grouped into sections or subsections (***%titldtext;*** see L.3.3).

a. DTD fragment for <***fltsafety***>:

```
<!ELEMENT fltsafety - o (%titldtext;)+>
<!ATTLIST fltsafety
          %navlink;
          %bodyatt;
          %secur;>
```

b. Attributes for <***fltsafety***>:

1. **%NAVLINK;** - Refer to common parameter entities for a complete description (see L.5.8).
2. **%BODYATT;** - Refer to common parameter entities for a complete description (see L.5.1).
3. **%SECUR;** - Refer to common parameter entities for a complete description (see L.5.3).

K.3.3.5.2 The element <***emergency***> is used to enter emergency procedures. It contains a required title (<***title***> see L.4.1.5.1) followed by paragraphs of text (<***para***> see L.4.1.5.3) and/or procedural text (<***proc***> see L.4.1.8.1).

a. DTD fragment for <***emergency***>:

```
<!ELEMENT emergency - - (title, (para | proc)+)>
<!ATTLIST emergency
          %navlink;
          %nodeloc;
          %bodyatt;
          %secur;>
```

b. Attributes for <***emergency***>:

1. **%NAVLINK;** - Refer to common parameter entities for a complete description (see L.5.8).
2. **%NODELOC;** - Refer to common parameter entities for a complete description (see L.5.9).
3. **%BODYATT;** - Refer to common parameter entities for a complete description (see L.5.1).
4. **%SECUR;** - Refer to common parameter entities for a complete description (see L.5.3).

K.3.3.5.3 The element <***decon***> is used to enter operational tasks containing procedures for interim nuclear, biological and chemical (NBC) decontamination. It contains a required title (<***title***> see L.4.1.5.1) followed by paragraphs of text (<***para***> see L.4.1.5.3) and/or procedural text (<***proc***> see L.4.1.8.1).

a. DTD fragment for <***decon***>:

```
<!ELEMENT decon - - (title, (para | proc)+)>
<!ATTLIST decon
          %navlink;
```

```
          %nodeloc;
          %bodyatt;
          %secur;>
```

b. Attributes for <***decon***>:

1. **%NAVLINK;** - Refer to common parameter entities for a complete description (see L.5.8).
2. **%NODELOC;** - Refer to common parameter entities for a complete description (see L.5.9).
3. **%BODYATT;** - Refer to common parameter entities for a complete description (see L.5.1).
4. **%SECUR;** - Refer to common parameter entities for a complete description (see L.5.3).

K.3.3.6 The element <***opsup***> is used for an operational supplement. It contains a required title (<***title***> see L.4.1.5.1) followed by specialized, additional, or revised operational procedures for the equipment in the TM contained within paragraphs of text that may be grouped into sections or subsections (***%titldtext;*** see L.3.3) or in conjunction with flight safety (<***fltsafety***> see K.3.3.5.1) for aviation manuals to which this manual is a supplement.

a. DTD fragment for <***opsup***>:

```
<!ELEMENT opsup - - (title, para*, ((%titldtext;)+ | fltsafety)+) >
<!ATTLIST opsup
          %navlink;
          %bodyatt;
          %secur;>
```

b. Attributes for <***opsup***>:

1. **%NAVLINK;** - Refer to common parameter entities for a complete description (see L.5.8).
2. **%BODYATT;** - Refer to common parameter entities for a complete description (see L.5.1).
3. **%SECUR;** - Refer to common parameter entities for a complete description (see L.5.3).

K.3.3.7 The element <***wpsup***> is used for a supplementary manual consisting of special, additional, or special applicability work packages. It contains a required title (<***title***> see L.4.1.5.1), followed optionally by The element <***wpinfo***>(see L.4.6.1) identifies the precondition requirements (tools, personnel, etc.) needed. Refer to the common elements section for a complete description.(see L.4.6.2), and paragraphs of text (<***para***> see L.4.1.5.3). This is followed by maintenance tasks (***%maintsk;*** see E.3.1.4.8), procedural text <***proc***> see L.4.1.8.1), and or specific work packages.

a. DTD fragment for <***wpsup***>:

```
<!ELEMENT wpsup - - ((title, wpinfo?, para*, ( %maintsk; | proc )) |
                      descwp | thrywp | surwp | perseqpwp |
                      pmcswp | pmiwp | lubewp | maintwp | tsindxwp |
                      testmodulewp | tswp)+>
<!ATTLIST wpsup
          %navlink;
          %bodyatt;
          %secur;>
```

b. Attributes for <***opsup***>:

1. **%NAVLINK;** - Refer to common parameter entities for a complete description (see L.5.8).
2. **%BODYATT;** - Refer to common parameter entities for a complete description (see L.5.1).
3. **%SECUR;** - Refer to common parameter entities for a complete description (see L.5.3).

K.3.3.7.1 The element <***descwp***> (see C.3.1.2) is used for information about equipment description.

K.3.3.7.2 The element <***thrywp***> (see C.3.1.3) is used for information about theory of operation.

K.3.3.7.3 The element <***surwp***> (see E.3.1.1) is used for information about service upon receipt.

K.3.3.7.4 The element <***perseqpwp***>(see E.3.1.2) is used for information about personal equipment.

K.3.3.7.5 The element <***pmcswp***> (see E.3.1.3) is used for information about preventive maintenance checks and services.

K.3.3.7.6 The element <***pmiwp***> (see E.3.1.5) is used for information about phased maintenance inspection.

K.3.3.7.7 The element <***lubewp***> (see E.3.1.6) is used for information about lubrication.

K.3.3.7.8 The element <***maintwp***> (see E.3.1.4) is used for information about maintenance.

K.3.3.7.9 The element <***tsindxwp***>(see F.5) is used for the troubleshooting procedures index.

K.3.3.7.10 The element <***testmodulewp***> - Refer to paragraph (seeF.6) is used for test module procedures for troubleshooting.

K.3.3.7.11 The element <***tswp***> - Refer to paragraph (see F.7) is used for troubleshooting procedures.

K.3.3.8 The element <***simsup***> support information supplement is used for supplementary manual containing supporting information (appendix-type material) (<***sim***> see MIL-STD-2361(SC) SIM Chapter SGML Elements).

a. DTD fragment for <***simsup***>:

```
<!ELEMENT simsup - - (sim) >
<!ATTLIST simsup
          %navlink;
          %bodyatt;
          %secur;>
```

b. Attributes for <***simsup***>:

1. **%NAVLINK;** - Refer to common parameter entities for a complete description (see L.5.8).
2. **%BODYATT;** - Refer to common parameter entities for a complete description (see L.5.1).
3. **%SECUR;** - Refer to common parameter entities for a complete description (see L.5.3).

K.3.3.9 The element <***rear***> (see K.3.1.8) is used to enter the rear matter.

K.3.3.10 The element volume <***volume***> (see K.3.1.10) is used to indicate a volume.

K.3.3.11 The element <***vol-rear***> (see K.3.1.11) is used to indicate the rear matter of a volume.

K.3.4 **Module <*module*>.** The element <***module***> contains one or more information module, but does not contain front or rear matter of the assembled TM, nor does it necessarily contain all the chapters (IMs) of the TM as assembled.

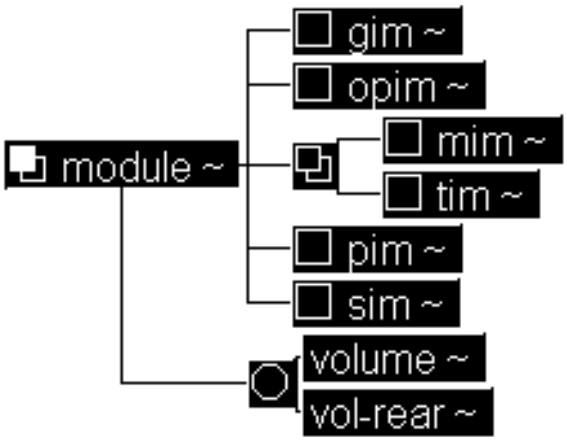

Figure 115 Module DTD Hierarchy

a. DTD fragment for <***module***>:

```
<!ELEMENT module - - (gim?, opim?, (mim?, tim?)*, pim?, sim?)
                      +(%vol.group;) >
<!ATTLIST module
          tmlabel        CDATA                    #IMPLIED
          eic            CDATA                    #CURRENT
          imno           CDATA                    #REQUIRED
          imctrlabel     NUMBER                   #REQUIRED
          imlevel        (depot | operator |
                          gensup | dirsup |
                          unitlvl | inter |
                          avum-avim | tmlvls)     #REQUIRED
          syslevel       (enditem | func-system)  "enditem"
          system-title   CDATA                    #IMPLIED
          revno          NUMBER                   #REQUIRED
          date           CDATA                    #REQUIRED
          %refs;
          %secur;>
```

b. Attributes for <***module***>:

1. **TMLABEL** - The number of the TM of which this information chapter (IM) was a part when originally created; this number remains the same throughout all versions of the IM.
2. **EIC** - The end-item code of the equipment covered in the TM of which this IM is a part. The first time the attribute is referenced for the element it is treated as required, thereafter that it will assume the current attribute value.
3. **IMNO** - Reserved for a unique identifying number of the information chapter, when and if such a numbering system is instituted; analogous to the attribute "WPNO" at the work package level.

4. **IMCTRLABEL** - A label giving the sequence number of the information chapter within this version of the TM; allows an individual IM to be composed with full numbering of pages and components.
5. **IMLEVEL** - The maintenance level of the information chapter.
   (a) “OPERATOR” - Applies to operator maintenance level.
   (b) “UNITLVL” - Applies to unit maintenance level.
   (c) “DIRSUP” - Applies to direct support (DS) maintenance level.
   (d) “GENSUP” - Applies to general support (GS) maintenance level.
   (e) “INTER” - Applies to intermediate (DS/GS) maintenance level.
   (f) “DEPOT” - Applies to depot maintenance level.
   (g) “AVUM-AVIM” - Applies to aviation unit (AVUM) and intermediate (AVIM) maintenance level.
   (h) “TMLVLS” - Applies to all maintenance levels.
6. **SYSLEVEL** - Specifies whether the chapter constituents cover the full end item ("ENDITEM") or a particular functional system ("FUNC-SYSTEM") within the end item. When the value is not entered for the attribute “SYSLEVEL”, the default value is “ENDITEM”.
7. **SYSTEM-TITLE** - If the attribute value of "syslevel" is "func-system," this attribute is used to name the functional system which the module covers.
8. **REVNO** - The overall revision number for the information chapter.
9. **DATE** - The date of the current version of the element.
10. **%REFS;** - Refer to common parameter entities for a complete description (see L.5.2).
11. **%SECUR;** - Refer to common parameter entities for a complete description (see L.5.3).

K.3.4.1 The element <***gim***> (see MIL-STD-2361(SC) GIM Chapter SGML Elements) is used to enter the general information chapter.

K.3.4.2 The element <***opim***>(see MIL-STD-2361(SC) OPIM Chapter SGML Elements)is used to enter the operator’s instruction information chapter.

K.3.4.3 The element <***mim***> (see MIL-STD-2361(SC) MIM Chapter SGML Elements) is used to enter the maintenance information chapter.

K.3.4.4 The element <***tim***> (see MIL-STD-2361(SC) TIM Chapter SGML Elements) is used to enter the troubleshooting information chapter.

K.3.4.5 The element <***sim***>(see MIL-STD-2361(SC) SIM Chapter SGML Elements) is used to enter the supporting information chapter.

K.3.4.6 The element <***pim***> (see MIL-STD-2361(SC) PIM Chapter SGML Elements) is used to enter the parts information chapter.

K.3.4.7 The element volume <***volume***> (see K.3.1.10) is used to indicate a volume.

K.3.4.8 The element <***vol-rear***> (see K.3.1.11) is used to indicate the rear matter of a volume.

K.3.5 The element <***avmodule***> contains the body of either an Aircraft Operator’s TM, a Pilot’s Checklist, or a Preparation of Aircraft for Shipping TM (see K.3.2).

a. DTD fragment for <***avmodule***>:

```
<!ELEMENT avmodule - - (pilot-opim | shipim) >
<!ATTLIST avmodule
          tmlabel        CDATA                    #IMPLIED
          eic            CDATA                    #CURRENT
          imno           CDATA                    #REQUIRED
          imctrlabel     NUMBER                   #REQUIRED
          imlevel        (depot | operator |
                          gensup | dirsup |
                          unitlvl | inter |
                          avum-avim | tmlvls)     #REQUIRED
          syslevel       (enditem | func-system)  "enditem"
          system-title   CDATA                    #IMPLIED
          revno          NUMBER                   #REQUIRED
          date           CDATA                    #REQUIRED
          %refs;
          %secur;>
```

b. Attributes for <***avmodule***>:

1. **TMLABEL** - The number of the TM of which this information chapter (IM) was a part when originally created; this number remains the same throughout all versions of the IM.
2. **EIC** - The end-item code of the equipment covered in the TM of which this IM is a part. The first time the attribute is referenced for the element it is treated as required, thereafter that it will assume the current attribute value.
3. **IMNO** - Reserved for a unique identifying number of the information chapter, when and if such a numbering system is instituted; analogous to the attribute "WPNO" at the work package level.
4. **IMCTRLABEL** - A label giving the sequence number of the information chapter within this version of the TM; allows an individual IM to be composed with full numbering of pages and components.
5. **IMLEVEL** - The maintenance level of the information chapter.
   (a) “OPERATOR” - Applies to operator maintenance level.
   (b) “UNITLVL” - Applies to unit maintenance level.
   (c) “DIRSUP” - Applies to direct support (DS) maintenance level.
   (d) “GENSUP” - Applies to general support (GS) maintenance level.
   (e) “INTER” - Applies to intermediate (DS/GS) maintenance level.
   (f) “DEPOT” - Applies to depot maintenance level.
   (g) “AVUM-AVIM” - Applies to aviation unit (AVUM) and intermediate (AVIM) maintenance level.
   (h) “TMLVLS” - Applies to all maintenance levels.
6. **SYSLEVEL** - Specifies whether the chapter constituents cover the full end item ("ENDITEM") or a particular functional system ("FUNC-SYSTEM") within the end item. When the value is not entered for the attribute “SYSLEVEL”, the default value is “ENDITEM”.
7. **SYSTEM-TITLE** - If the attribute value of "syslevel" is "func-system," this attribute is used to name the functional system which the module covers.

8. **REVNO** - The overall revision number for the information chapter.
9. **DATE** - The date of the current version of the element.
10. **%REFS;** - Refer to common parameter entities for a complete description (see L.5.2).
11. **%SECUR;** - Refer to common parameter entities for a complete description (see L.5.3).

K.3.5.1 The element **<*pilot-opim*>** is the main body of an aircraft operator's TM. Information on **<*pilot-opim*>** will be supplied in a later revision of this handbook.

K.3.5.2 The element **<*shipim*>** is the main body of a shipping manual. Information on **<*shipim*>** will be supplied in a later revision of this handbook.

THIS PAGE INTENTIONALLY LEFT BLANK.

SHARED COMMON ELEMENTS

L.1 **Scope.** The following parameter entities and elements are common throughout MIL-STD-2361(SC)and are shared elements used with the various information chapters.

L.2 **Applicable documents.** Refer to paragraph 2.

L.3 **Parameter Entities Elements.** The parameter entities listed in this paragraph will define the parameter entity, description, and content model. The elements defined in the parameter entity will be defined in L.4

L.3.1 **Lists *%list;*.** The parameter entity ***%list;*** defines the available list types, which are random (unordered) list (<***randlist***> see L.4.1.2.2) , sequential (numbered) list (<***seqlist***> see L.4.1.2.1) and definition list (<***deflist***> see L.4.1.2.3).

a. DTD fragment for ***%list;***:

```
<!ENTITY % list "seqlist | randlist | deflist">
```

L.3.2 **Alert Notices *%alert;*.** The parameter entity ***%alert;*** defines any required warning(s), caution(s) or note(s) to alert reader to potentially hazardous condition, if the prescribed conditions and notices are not followed. The parameter entity contains warning statement (<***warning***> see L.4.1.1.2), caution statement (<***caution***> see L.4.1.1.3), and note statement (<***note***> see L.4.1.1.4).

a. DTD fragment for ***%alert;***:

```
<!ENTITY % alert "(warning*, caution*, note*)" >
```

L.3.3 **Titled Paragraph *%titldtext;*.** The parameter entity ***%titldtext;*** is provided to allow sections and/ or subsections in general data format. The parameter entity contains a section title (<***title***> see L.4.1.5.1) followed by an optional subsection title (<***subtitle***> see L.4.1.5.2) followed by either paragraph(s) (<***para***> see L.4.1.5.3) and/or paragraph(s) with required alert notices (<***specpara***> see L.4.1.1.1).

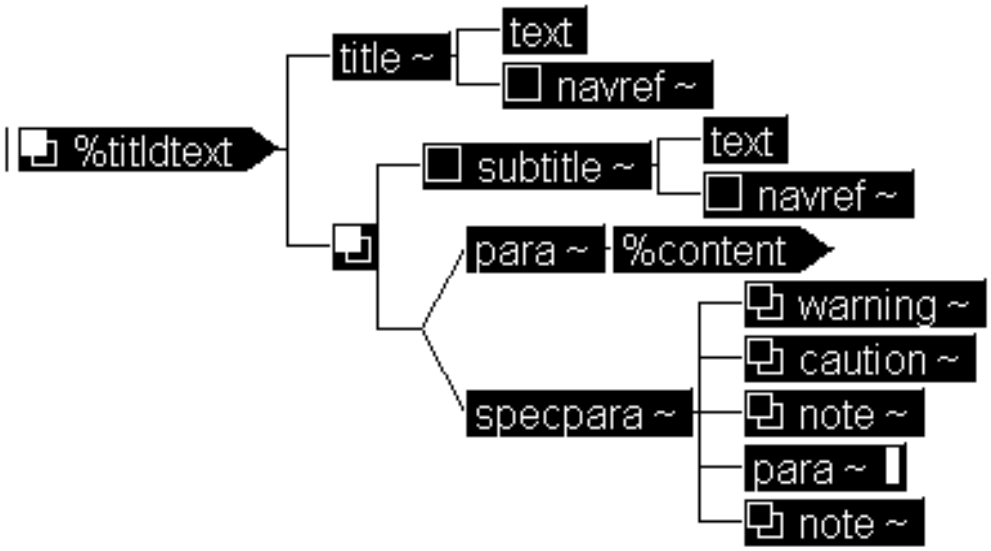

Figure 116 DTD Hierarchy for Parameter Entity %titldtext;

a. DTD fragment for ***%titldtext;***:

```
<!ENTITY % titldtext "(title, (subtitle?, (para| specpara))+)">
```

L.3.4 **Titled Procedures *%procedures;*.** The parameter entity ***%procedures;*** is common procedural content model for a task or work package. The parameter entity contains an optional section title (<***title***> see L.4.1.5.1) followed by either subsection(s) or procedure(s) (<***proc***> see L.4.1.8.1). The subsection contains an optional subsection title (<***subtitle***> see L.4.1.5.2) followed by either paragraph(s) (<***para***> see L.4.1.5.3) and/ or paragraph(s) with required alert notices (<***specpara***> see L.4.1.1.1)

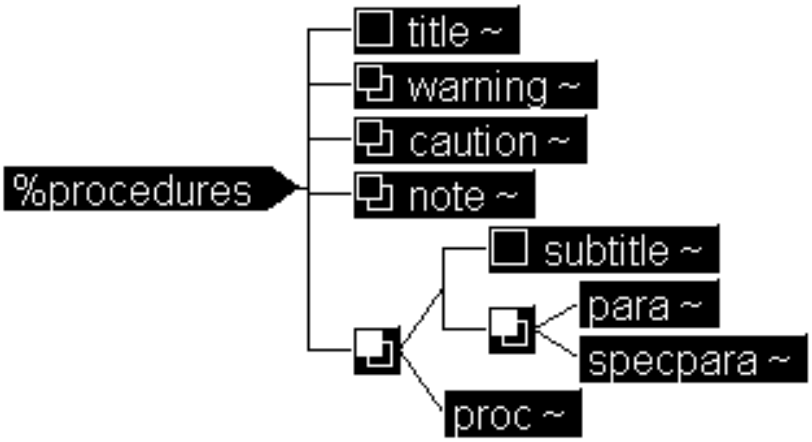

Figure 117 DTD Hierarchy for Parameter Entity %procedures;

a. DTD fragment for ***%procedures;***:

```
<!ENTITY % procedures "(title?, warning*, caution*, note*, ((subtitle?,
                        (para | specpara)+) | proc)+)">
```

L.3.5 **Volume Separation *%vol.group;*.** The parameter entity ***%vol.group;*** is the volume separations for large TMs. The element contains a the volume front matter (<***volume***> see K.3.1.10) and volume rear matter (<***vol-rear***> see K.3.1.11).

a. DTD fragment for ***%vol.group;***:

```
<!ENTITY % vol.group    "volume | vol-rear">
```

L.3.6 **Inline Text *%text;*.** The parameter entity ***%text;*** is used for including or excluding information based on the data requirements within a data element. The parameter entity ***%text;*** is used for specifying contextual information based on the data requirements within an element. This allows for greater control of the data within data elements. The parameter entity ***%text;*** contains at least one of following the narrative text (#PCDATA parsable characters see A.3.2), CAGE code (<***cageno***> see L.4.5.1), figure callout number (<***callout***> see L.4.1.3.2), changed text (<***change***> see L.4.1.7), control or indicator description (<***ctrlind***> see L.4.5.2), control or indicator value/setting (<***ctrlind-val***> see L.4.5.3), drawing name (<***dwgname***> see L.4.5.4), drawing number

(<***dwgno***> see L.4.5.5) emphasis narrative (<***emphasis***> see L.4.1.6.1), emphasis aviation term (<***emphterm***> see L.4.1.6.2), external document reference (<***extref***> see L.4.1.3.3), flight safety critical part (<***flghtsafe-part***> see L.4.5.6), footnote narrative (<***ftnote***> see L.4.1.4.1), footnote reference (<***ftnref***> see L.4.1.4.2), index flag reference (<***indxref***> see L.4.1.3.4), lubricant instruction (<***lubricant***> see L.4.5.9), equipment model number (<***modelno***> see L.4.5.10), component/assembly name (<***name***> see L.4.5.11), national stock number (NSN) (<***nsn***> see L.4.5.12), null content marker (<***null***> see L.4.1.6.3), page location cross-reference marker (<***pageloc***> see L.4.1.3.5), part number (<***partno***> see L.4.5.13), supply catalog number (<***sc***> see L.4.5.14), supporting information work package cross-reference (<***simref***> see L.4.1.3.6), graphic symbol (<***symbol***> see L.4.4.2), torque value (<***torque***> see L.4.5.17), troubleshooting location reference (<***tslocptr***> see L.4.1.3.7), verbatim narrative (<***verbatim***> see L.4.1.6.4), critical voltage measurement (<***voltage***> see L.4.5.18) and cross reference pointer (<***xref***> see L.4.1.3.8).

a. DTD fragment for ***%text;***:

```
<!ENTITY % text "(#PCDATA | cageno | callout | change | ctrlind |
                  ctrlind-val | dwgname | dwgno |emphasis | emphterm |
                  extref | flghtsafe-part | ftnote | ftnref| indxref |
                  lubricant | modelno | name | nsn | null | pageloc |
                  partno | sc | simref | symbol | torque | tslocptr |
                  verbatim |voltage | xref)+">
```

L.3.7 **Paragraph Content *%content;*.** The parameter entity ***%content;*** is referenced within the elements <***para***> and <***item***> and is used for specifying contextual information based on the data requirements within an element. This allows for greater control of the data within data elements. The parameter entity ***%content;*** contains at least one of the following: the inline structural, formatting and content sensitive text (***%text;*** see L.3.6), various lists (***%list;*** see L.3.1), figure anchor (anchor see L.4.1.3.1), figure (<***figure***> see L.4.4.1), illustration (<***graphic***> see L.4.4.1.2), navigation reference (<***navref***> see L.4.7.10), note statement (<***note***> see L.4.1.1.4), CALS table (<***table***> see L.4.2.1) and/or simple table (<***tabmat***> see L.4.3.1).

a. DTD fragment for ***%content;***:

```
<!ENTITY % content "(%text; | (%list;) | anchor | figure | graphic | navref |
                     note | table | tabmat)+">
```

L.3.8 **Table Content *%tabcontent;*.** The parameter entity ***%tabcontent;*** is referenced within the elements <***entry***> and <***tabentry***> and is used for specifying contextual information based on the data requirements within an element. This allows for greater control of the data within data elements. The parameter entity ***%content;*** contains at least one of the following: the inline structural, formatting and content sensitive text (***%text;*** see L.3.6), various lists (***%list;*** see L.3.1), caution statement (<***caution***> see L.4.1.1.3), illustration (<***graphic***> see L.4.4.1.2), navigation reference (<***navref***> see L.4.7.10), note statement (<***note***> see L.4.1.1.4), general paragraph (<***para***> see L.4.1.5.3), procedure (<***proc***> see L.4.1.8.1), general paragraph with required alert notices (<***specpara***> see L.4.1.1.1), procedural step first level (<***step1***> see L.4.1.8.2), title (<***title***> see L.4.1.5.1), and/or warning statement (<***warning***> see L.4.1.1.2).

a. DTD fragment for ***%tabcontent;***:

```
<!ENTITY % tabcontent "(%text; | (%list;) | caution | graphic | navref |
                        note | para | proc | specpara | step1 | title |
```

```
                    warning)+">
```

L.3.9 **Changed Text *%changetext;*.** The parameter entity ***%changetext;*** is used for specifying contextual information based on the modified information within <***change***>. The parameter entity ***%changetext;*** contains at least one of the following narrative text (#PCDATA parsable characters see A.3.2), CAGE code (<***cageno***> see L.4.5.1), figure callout number (<***callout***> see L.4.1.3.2), caution statement (<***caution***> see L.4.1.1.3), changed text (<***change***> see L.4.1.7), control or indicator description (<***ctrlind***> see L.4.5.2), control or indicator value/setting (<***ctrlind-val***> see L.4.5.3), drawing name (<***dwgname***> see L.4.5.4), drawing number (<***dwgno***> see L.4.5.5) emphasis narrative (<***emphasis***> see L.4.1.6.1), emphasis aviation term (<***emphterm***> see L.4.1.6.2), external document reference (<***extref***> see L.4.1.3.3), flight safety critical part (<***flghtsafe-part***> see L.4.5.6), footnote narrative (<***ftnote***> see L.4.1.4.1), footnote reference (<***ftnref***> see L.4.1.4.2), index flag reference (<***indxref***> see L.4.1.3.4), lubricant instruction (<***lubricant***> see L.4.5.9), equipment model number (<***modelno***> see L.4.5.10), component/assembly name (<***name***> see L.4.5.11), national stock number (NSN) (<***nsn***> see L.4.5.12), null content marker (<***null***> see L.4.1.6.3), page location cross-reference marker (<***pageloc***> see L.4.1.3.5), general paragraph (<***para***> see L.4.1.5.3), part number (<***partno***> see L.4.5.13), supply catalog number (<***sc***> see L.4.5.14), supporting information work package cross-reference (<***simref***> see L.4.1.3.6), procedural step first level (<***step1***> see L.4.1.8.2), graphic symbol (<***symbol***> see L.4.4.2), title (<***title***> see L.4.1.5.1), torque value (<***torque***> see L.4.5.17), troubleshooting location reference (<***tslocptr***> see L.4.1.3.7), verbatim narrative (<***verbatim***> see L.4.1.6.4), critical voltage measurement (<***voltage***> see L.4.5.18), warning statement (<***warning***> see L.4.1.1.2) and cross reference pointer (<***xref***> see L.4.1.3.8).

a. DTD fragment for ***%changetext;***:

```
<!ENTITY % changetext "(#PCDATA | cageno | callout | caution | change |
                        ctrlind | ctrlind-val | dwgname | dwgno | emphasis |
                        emphterm | extref | flghtsafe-part | ftnote | ftnref |
                        indxref | lubricant | modelno | name | note | nsn |
                        null | pageloc | para | partno | sc | simref | step1 |
                        symbol | title | torque | tslocptr | verbatim |
                        voltage | warning | xref)+">
```

L.3.10 **IETM Condition Statements *%conditions;*.** The parameter entity ***%conditions;*** is for various condition states that evaluated to corresponding state value. The parameter entity is used within corrective action (<***action***> see F.10.6) and navigation reference (<***navref***> see L.4.7.10) and contains either an optional expression (<***expression***> see L.4.7.1), an optional assertion (<***assertion***> see L.4.7.2), an optional alternative navigation path (<***alts***> see L.4.7.3), process call and return (<***process-call***> see L.4.7.4), or an optional prompt (<***prompt***> see L.4.7.1.3) followed by an optional value(s) passed during navigation (<***valuepass***> see L.4.7.5) followed by the current fault state (<***faultstate***> see L.4.7.6) and followed by either test alternative(s) (<***test-alts***> see L.4.7.7) or an option navigation paragraph (<***navpara***> see L.4.7.8).

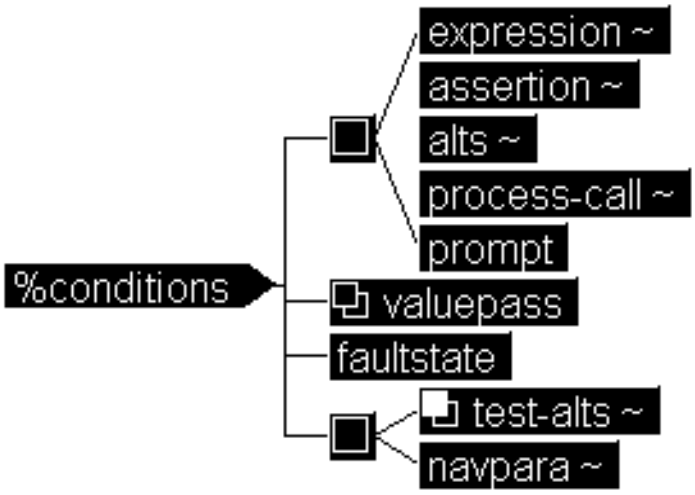

Figure 118 DTD Hierarchy for Parameter Entity %conditions;

a. DTD fragment for ***%conditions;***:

```
<!ENTITY % conditions "((expression | assertion | alts | process-call |
                         prompt)?, valuepass*, faultstate, (test-alts+ |
                         navpara)?) ">
```

L.3.11 **Unary Operator *%unop;*.** The parameter entity ***%unop;*** is the possible unary operator to perform against an operand or operation. The parameter entity contains test component result, logical evaluation, set element manipulation or number operators. The test component results operators are passed results (<***pass***> see L.4.7.1.1.1) and failed results (<***fail***> see L.4.7.1.1.2). The logical evaluation operators are is the operand empty or null (<***empty***> see L.4.7.1.1.6), not true result (<***nottrue***> see L.4.7.1.1.5), true result (<***true***> see L.4.7.1.1.4), not operator (<***not***> see L.4.7.1.1.7), undefined value test (<***undef***> see L.4.7.1.1.3), maximum allowed value (<***max***> see L.4.7.1.1.8) and minimum allowed value (<***min***> see L.4.7.1.1.9). The set element manipulation operators are first member in a set (<***head***> see L.4.7.1.1.10), last member in a set (<***tail***> see L.4.7.1.1.11), specified position in a set (<***index***> see L.4.7.1.1.12) and number element in a set (<***size***> see L.4.7.1.1.13). The number operators are negative value (<***neg***> see L.4.7.1.1.14), convert number truncated to an integer (<***trunc***> see L.4.7.1.1.15) and convert number to a real number (<***float***> see L.4.7.1.1.16).

a. DTD fragment for ***%unop;***:

```
<!ENTITY % unop "%unop-MT; | float">

<!ENTITY % unop-MT "empty | fail | head | index | max | min | neg |
                    not | nottrue | pass | size | tail | true | trunc |
                    undef">
```

NOTE: The reason ***%unop;*** is separated into ***%unop-MT;*** and <***float***> is to avoid a parsing error. Both ***%unop;*** and ***%value;*** contain <***float***> as an element and using the original parameter entity would cause the error an element being defined twice.

L.3.12 **Binary Operations *%binop;*.** The parameter entity ***%binop;*** enumerates all of the possible binary operators which may be used within an operation and/or expression. The parameter entity contains logical evaluation operators, set element manipulation operators or conversion functions. The parameter entity contains logical evaluation, string, sequenced set element manipulation, unordered set element manipulation and number operators. The logical evaluation operators are operands equal (<***eq***> see L.4.7.1.2.1), are operands not equal (<***ne***> see L.4.7.1.2.2), less than (<***lt***> see L.4.7.1.2.3), less than or equal to (<***le***> see L.4.7.1.2.4), greater than (<***gt***> see L.4.7.1.2.5), greater than or equal to (<***ge***> see L.4.7.1.2.6), and function (<***and***> see L.4.7.1.2.7), inclusive or function (<***or***> see L.4.7.1.2.8) and exclusive or function (<***xor***> see L.4.7.1.2.9). The number operators are plus (<***plus***> see L.4.7.1.2.10), minus (<***minus***> see L.4.7.1.2.11), multiplication (<***mult***> see L.4.7.1.2.12), division (<***div***> see L.4.7.1.2.13), integer division (<***idivide***> see L.4.7.1.2.14), exponentiation (<***exponent***> see L.4.7.1.2.16) and modulus (remainder) (<***mod***> see L.4.7.1.2.15). The sequence set operators are remove an element (<***remv***> see L.4.7.1.2.18), add an element (<***add***> see L.4.7.1.2.17), append an element (<***append***> see L.4.7.1.2.19) and is subsequence set part of the sequence set (<***subsequence***> see L.4.7.1.2.20). The unordered set operators are remove an element (<***remv***> see L.4.7.1.2.18), add an element (<***add***> see L.4.7.1.2.17), union of two sets (<***union***> see L.4.7.1.2.21), intersection of two sets (<***intersect***> see L.4.7.1.2.22), difference between two sets (<***set-diff***> see L.4.7.1.2.23), member of set (<***member***> see L.4.7.1.2.24), is subset of the set (<***subset***> see L.4.7.1.2.25) and disjointed sets (<***disjoint***> see L.4.7.1.2.26). The operator stores the navigation reference (<***store***> see L.4.7.1.2.27).

a. DTD fragment for ***%binop;***:

```
<!ENTITY % binop-MT "and | append | disjoint | div | eq | exponent | ge | gt |
                     idivide | intersect | le | lt | member | minus | mod |
                     mult | ne | or | plus | set-diff | store | subsequence |
                     subset | union | xor">

<!ENTITY % binop "%binop-MT; | add | remv " >
```

NOTE: The reason ***%binop;*** is separated into ***%binop-MT;***, <***add***> and <***remv***> are the content models are different.

L.3.13 **Operand Data Types *%value;*.** The parameter entity ***%value;*** is the expected operand data type to process information. The parameter entity contains the following operand data types boolean <***(boolean***> see L.4.7.1.5.1), floating point number (<***float***> see L.4.7.1.1.16), integer (<***integer***> see L.4.7.1.5.3), real number (<***real***> see L.4.7.1.5.4), character string (<***string***> see L.4.7.1.5.5), input information (<***input***> see F.10.3.10), undefined for the property set (<***nil***> see L.4.7.1.5.6), test result value (<***outcome***> see F.10.4), a sequence set (<***sequence***> see L.4.7.1.5.10) and an unordered set (<***set***> see L.4.7.1.5.9).

a. DTD fragment for ***%value;***:

```
<!ENTITY % value-DT "boolean | float | integer | real | string ">

<!ENTITY % value "%value-DT; | input | nil | outcome | sequence | set " >
```

NOTE: The reason ***%value;*** is separated into ***%value-DT;***, ***<input>***, ***<nil>***, ***<outcome>***, ***<sequence>*** and ***<set>*** are the content models are different.

L.4 **Common Elements.** This paragraph will define the common elements used throughout MIL-STD-2361(SC). The elements are divided into functional groups to define the element's characteristic. The elements are defined with the element name, description, content model and attribute list.

L.4.1 **Structural Elements.** The elements have structural or formatting type information and is subdivided into various functional groups.

L.4.1.1 **Alert Notices.**

L.4.1.1.1 **Paragraph with Required Alert Notices <*specpara*>.** The element ***<specpara>*** is used for paragraphs that are specifically associated with warnings, cautions, or notes. The actual narrative data (***<para>*** see L.4.1.5.3) will follow after the warning statement(s) (***<warning>***), caution statement(s) (***<caution>***), and/or note statement(s) (***<note>***). The alert notices and the narrative text will be printed on the same page or will be electronic displayed before the narrative text.

a. DTD fragment for ***<specpara>***:

```
<!ELEMENT specpara - - (warning*, caution*, note*, para, note*)>
<!ATTLIST specpara
          %refs;
          %secur;>
```

b. Attributes for ***<specpara>*** :

- **%REFS;** - Refer to common parameter entities for a complete description (see L.5.2).
- **%SECUR;** - Refer to common parameter entities for a complete description (see L.5.3).

L.4.1.1.2 **Warning Statement <*warning*> .** A warning contains an operation, procedure, or statement that if not performed properly may result in personal injury or death. A warning must appear on the same page or screen as the procedure, step, or paragraph to which it applies. The element contains at least one of the following:

Icon set (***<icon-set>*** see L.4.4.3) to display hazardous icon symbol to identify quickly the type of warning being discussed.

Illustration (***<graphic>*** see L.4.4.1.2) is provided to better describe the warning statement.

The warning statement (***<para>*** see L.4.1.5.3) used to describe instructions to follow.

Lists (***%list;*** see L.3.1) provides various list types (random, numbered or definition) used to describe the instruction to follow.

a. DTD fragment for ***<warning>***:

```
<!ELEMENT warning - - (icon-set | graphic | para | %list;)+ -(figure | table |
                        tabmat | note) >
<!ATTLIST warning
          keyword           CDATA          #IMPLIED
          xrefid            IDREF          #IMPLIED
          warnsum-entry     %yesorno;      #IMPLIED
          %navlink;
          %bodyatt;
```

```
%secur;>
```

b. Attributes for <***warning***> :

1. **KEYWORD** - Specifies a word or phrase that may be used as the title of the warning. The information appears under the generated text WARNING.
2. **XREFID** - References the identifier of the element with which the warning is associated.
3. **WARNSUM-ENTRY** - Specifies whether or not the warning should appear in the warning summary of the TM. The implied value is for inclusion.
4. **%NAVLINK;** - Refer to common parameter entities for a complete description (see L.5.8).
5. **%BODYATT;** - Refer to common parameter entities for a complete description (see L.5.1).
6. **%SECUR;** - Refer to common parameter entities for a complete description (see L.5.3).

L.4.1.1.3 **Caution Statement <*caution*>.** A caution is used for procedures or actions that if not executed properly may result in damage to equipment or in long-term health hazards. The element <***caution***> contains at least one of the following elements:

Illustration (<***graphic***> see L.4.4.1.2) is provided to better describe the caution statement.

The caution statement (<***para***> see L.4.1.5.3) used to describe instructions to follow.

Lists (***%list;*** see L.3.1) provides various list types (random, numbered or definition) used to describe the instruction to follow.

a. DTD fragment for <***caution***>:

```
<!ELEMENT (caution |
           note) - - (graphic | para | %list;)+ -(figure | table | tabmat |
                      note) >
<!ATTLIST (caution |
           note)
           keyword         CDATA      #IMPLIED
           xrefid          IDREF      #IMPLIED
           %navlink;
           %bodyatt;
           %secur;>
```

b. Attributes for <***caution***> :

1. **KEYWORD** - Specifies a word or phrase that may be used as the title of the caution. The information appears under the generated text CAUTION.
2. **XREFID** - References the identifier of the element with which the caution is associated.
3. **%NAVLINK;** - Refer to common parameter entities for a complete description (see L.5.8).
4. **%BODYATT;** - Refer to common parameter entities for a complete description (see L.5.1).
5. **%SECUR;** - Refer to common parameter entities for a complete description (see L.5.3).

L.4.1.1.4 **Note Statement<*note*>.** A procedure, condition, or statement that is important enough to highlight as a note. The element <***note***> contains at least one of the following elements:

Illustration (<***graphic***> see L.4.4.1.2) is provided to better describe the note statement.

The note statement (<***para***> see L.4.1.5.3) used to describe instructions to follow.

Lists (***%list;*** see L.3.1) provides various list types (random, numbered or definition) used to describe the instruction to follow.

a. DTD fragment for <***note***>: See L.4.1.1.3 a.

b. Attributes for <***note***> : See L.4.1.1.3 b.

L.4.1.2 **List Elements.**

L.4.1.2.1 **Sequence (Ordered) List <*seqlist*>.** The element <***seqlist***> is used for a sequential or ordered list. The sequence of items is denominated by numbers or letters. It contains an optional list title (<***title***> see L.4.1.5.1) followed at least one list item (<***item***>). The numbering scheme is the first level list uses numerical counter surrounded by parentheses, the second level list uses lower case alpha characters counter surrounded by parentheses and the third level list uses numerical counter followed by a right parentheses.

a. DTD fragment for <***seqlist***> :

```
!ELEMENT seqlist - - (title?, item+)>
<!ATTLIST seqlist
          %navlink;
          %nodeloc;
          %refs;
          %secur;>
```

b. Attributes for <***seqlist***> :

1. **%NAVLINK;** - Refer to common parameter entities for a complete description (see L.5.8).
2. **%NODELOC;** - Refer to common parameter entities for a complete description (see L.5.9).
3. **%REFS;** - Refer to common parameter entities for a complete description (see L.5.2).
4. **%SECUR;** - Refer to common parameter entities for a complete description (see L.5.3).

L.4.1.2.1.1 **List Item <*item*>.** The element <***item***> is an entry in a sequential or random list or an equipment item. The element contains paragraph content (***%content;*** see L.3.7).

a. DTD fragment for <***item***>:

```
<!ELEMENT item - o (%content;) >
<!ATTLIST item
            label       CDATA   #IMPLIED
            %navlink;
            %nodeloc;
            %refs;
            %secur;>
```

b. Attributes for <***item***>:

1. **LABEL** - Contains a number or symbol that will override the normal numbering or marker for the list item being generated by the composition system.
2. **%NAVLINK;** - Refer to common parameter entities for a complete description (see L.5.8).
3. **%NODELOC;** - Refer to common parameter entities for a complete description (see L.5.9).

4. **%REFS;** - Refer to common parameter entities for a complete description (see L.5.2).
5. **%SECUR;** - Refer to common parameter entities for a complete description (see L.5.3).

L.4.1.2.2 **<*randlist*>.** The element **<*randlist*>** is used for a list of randomly ordered items and are not numbered. The element contains an optional list title (**<*title*>** see L.4.1.5.1) followed by at least one list item (**<*item*>**). The bullet scheme, when specified, is the first level list uses a filled circled and the second level list uses a dash.

a. DTD fragment for **<*randlist*>**:

```
<!ELEMENT randlist - - (title?, item+)>
<!ATTLIST randlist
          bullet       %yesorno   "0"
          %navlink;
          %nodeloc;
          prefix       CDATA      #IMPLIED
          %refs;
          %secur;>
```

b. Attributes for **<*randlist*>** :

1. **BULLET**- Specifies whether (non-zero number) or not a bullet (0) should precede each item. If no value is entered the default is no bullet displayed.
2. **%NAVLINK;** - Refer to common parameter entities for a complete description (see L.5.8).
3. **%NODELOC;** - Refer to common parameter entities for a complete description (see L.5.9).
4. **PREFIX** - Specifies a character, word, or symbol (other than a bullet) that should precede each item
5. **%REFS;** - Refer to common parameter entities for a complete description (see L.5.2).
6. **%SECUR;** - Refer to common parameter entities for a complete description (see L.5.3).

L.4.1.2.2.1 **List Item <*item*>.** The element **<*item*>** (see L.4.1.2.1.1) is an entry in a sequential or random list or an equipment item.

L.4.1.2.3 **Definition List <*deflist*>.** The element **<*deflist*>** identifies a list of terms and definitions. The term can enclose a word, phrase, abbreviation, or symbol. The element contains an optional title list (**<*title*>** (see L.4.1.5.1) followed by a list of terms (**<*term*>**) each of which must be followed by its definition (**<*def*>**).

a. DTD fragment for **<*deflist*>**:

```
<!ELEMENT deflist - - (title?, (term, def)+)>
<!ATTLIST deflist
          %navlink;
          %nodeloc;
          %refs;
          %secur;>
```

b. Attributes for **<*deflist*>** :

1. **%NAVLINK;** - Refer to common parameter entities for a complete description (see L.5.8).

2. **%NODELOC;** - Refer to common parameter entities for a complete description (see L.5.9).
3. **%REFS;** - Refer to common parameter entities for a complete description (see L.5.2).
4. **%SECUR;** - Refer to common parameter entities for a complete description (see L.5.3).

L.4.1.2.3.1 **Term <*term*>.** The element <***term***> is a word, phrase, acronym, symbol or abbreviation to be defined in a definition list. The element contains inline textual narrative (***%text;*** see L.3.6).

a. DTD fragment for <***term***>:

```
<!ELEMENT term - o (%text;) >
<!ATTLIST term
            %navlink;
            %nodeloc;
            %refs;
            %secur;>
```

b. Attributes for <***term***>:

1. **%NAVLINK;** - Refer to common parameter entities for a complete description (see L.5.8).
2. **%NODELOC;** - Refer to common parameter entities for a complete description (see L.5.9).
3. **%REFS;** - Refer to common parameter entities for a complete description (see L.5.2).
4. **%SECUR;** - Refer to common parameter entities for a complete description (see L.5.3).

L.4.1.2.3.2 **Definition<*def*>.** The element <***def***> is a definition for the term in a definition list. The element contains a general paragraph (<***para***> see L.4.1.5.3).

a. DTD fragment for <***def***>:

```
<!ELEMENT def - - (para)>
<!ATTLIST def
            %navlink;
            %refs;
            %secur;>
```

b. Attributes for <***term***>:

1. **%NAVLINK;** - Refer to common parameter entities for a complete description (see L.5.8).
2. **%REFS;** - Refer to common parameter entities for a complete description (see L.5.2).
3. **%SECUR;** - Refer to common parameter entities for a complete description (see L.5.3).

L.4.1.3 **Reference Elements.**

L.4.1.3.1 **Figure Anchor <*anchor*> .** An anchor binds a figure to a location in another element in the current document instance. The anchor name is referenced by <***figure***> and uses the attribute “PLACEMENT” to determine the figure placement relative to the anchor. The <***anchor***> and <***figure***> attribute is used for display and composition processing. The element is EMPTY and all pertinent information is entered through its attributes.

a. DTD fragment for <***anchor***>:

```
<!ELEMENT anchor - o EMPTY>
<!ATTLIST anchor
          anchorname      NMTOKEN    #REQUIRED
          figid           IDREFS     #REQUIRED>
```

b. Attributes for <***anchor***> :

1. **ANCHORNAME** - Specifies the anchor's name, which will be referenced in <***figure***> attribute "PLACEMENT". This is a NAME not an ID attribute value.
2. **FIGID** - Reference(s) the figure identifier tied to the current anchor.

L.4.1.3.2 **Figure Callout <*callout*>.** The element <***callout***> appears in text to reference a callout number, letter, or symbol appearing in a figure. This element contains a navigational reference (<***navref***> see L.4.7.10) .

a. DTD fragment for <***callout***>:

```
<!ELEMENT callout - - (navref)>
<!ATTLIST callout
          id            ID        #IMPLIED
          %navlink;
          numref        IDREF     #REQUIRED
          partref       IDREF     #IMPLIED
          assocfig      IDREF     #IMPLIED
          label         NUMBER    #IMPLIED>
```

b. Attributes for <***callout***> :

1. **ID** - Specifies the identifier of the callout element.
2. **%NAVLINK;** - Refer to common parameter entities for a complete description (see L.5.8).
3. **NUMREF** - References the figure identifier of the callout.
4. **PARTREF** - References the part identifier to which the callout is being associated.
5. **ASSOCFIG** - References the figure identifier in which the callout appears.
6. **LABEL** - Specifies a literal expression of the callout.

L.4.1.3.3 **External Document Reference <*extref*>.** The element <***extref***> is used for a reference to another TM, information chapter outside the document, work package outside the document, document, or other external source. Note that the attributes for this element contain the content to be displayed and is not an SGML IDREF since the references are external to the document instance. The element is EMPTY and all pertinent information is entered through its attributes.

a. DTD fragment for <***extref***>:

```
<!ELEMENT extref - o EMPTY >
<!ATTLIST extref
            docno     CDATA     #IMPLIED
            revno     NUMBER    #IMPLIED
            pretext   CDATA     #IMPLIED
```

```
posttext  CDATA     #IMPLIED
wpid      CDATA     #IMPLIED
taskid    CDATA     #IMPLIED
figid     CDATA     #IMPLIED
tableid   CDATA     #IMPLIED
partid    CDATA     #IMPLIED
%secur;>
```

b. Attributes for <***extref***> :

1. **DOCNO** - Used to specify the title, document number, or other identifier of an external document.
2. **REVNO** - Used to specify the revision level of the external document.
3. **PRETEXT** - Used to specify any text that precedes the external reference when resolved for display.
4. **POSTTEXT** - Used to enter any text that follows the external reference when resolved for display.
5. **WPID** - Used to specify a work package identification number. This number is not the sequence number, but attribute "WPNO" value. To specify the work package sequence number use either attribute "PRETEXT" or "POSTTEXT". The attribute will allow future links to the information.
6. **TASKID** - Used to specify a task identifier (ID). To specify the task name use either attribute "PRETEXT" or "POSTTEXT". The attribute will allow future links to the information.
7. **FIGID** - Used to specify a figure identifier (ID). To specify the figure title use either attribute "PRETEXT" or "POSTTEXT". The attribute will allow future links to the information.
8. **TABLEID** - Used to specify a table identifier (ID). To specify the table title use either attribute "PRETEXT" or "POSTTEXT". The attribute will allow future links to the information.
9. **PARTID** - Used to specify a part or a part number identifier (ID). To specify the part or part number use either attribute "PRETEXT" or "POSTTEXT". The attribute will allow future links to the information.
10. **%SECUR;** - Refer to common parameter entities for a complete description (see L.5.3).

L.4.1.3.4 **Index Marker Reference <*indxref*>.** The element <***indxref***> establishes a document location and index text to be referenced within the alphabetic index (<***aindx***> see K.3.1.8.1.1). The element is EMPTY and all pertinent information is entered through its attributes.

a. DTD fragment for <***indxref***>:

```
<!ELEMENT indxref - o EMPTY >
<!ATTLIST indxref
            id          ID        #REQUIRED
            prime       CDATA     #IMPLIED
            primerefs   IDREFS    #IMPLIED
            second      CDATA     #IMPLIED
            secndrefs   IDREFS    #IMPLIED
```

```
            third        CDATA      #IMPLIED>
```

b. Attributers for <***indxref***>:

1. **ID** - Used for the when referencing the prime or secondary index text
2. **PRIME** - The text to be used as the primary level index entry. If present this text is used when the attribute "ID" is referenced.
3. **PRIMEREFS** - Reference(s) a primary level index entry under which second or third level index entry will fall under in the alphabetic index.
4. **SECOND** - The text to be used as the second level index entry. If present this text is used when the attribute "ID" is referenced. Either the attribute "PRIME" or "PRIMEREFS" must be defined.
5. **SECNDREFS** - Reference(s) a second level index entry under which the third level index entry will fall under in the alphabetic index.
6. **THIRD** - The text to be used as the third level index entry. One of the attributes "PRIME", "PRIMEREFS", "SECOND" or "SECNDREFS" must be defined.

L.4.1.3.5 **<*pageloc*>.** The element <***pageloc***> is used to establish a page location anchor that can be invoked as a cross-reference and resolved to the page number. Used when a text location cannot be referenced to an element, such as a table, task, or work package. The element is EMPTY and all pertinent information is entered through its attributes.

a. DTD fragment for <***pageloc***>:

```
<!ELEMENT pageloc - o EMPTY >
<!ATTLIST pageloc
            pageid     ID     #REQUIRED
            %secur;>
```

b. Attributes for <***pageloc***>:

- **PAGEID** - Specifies the page location identifier.
- **%SECUR;** - Refer to common parameter entities for a complete description (see L.5.3).

L.4.1.3.6 **SIM Reference <*simref*>.** The element <***simref***> is used to reference an item in one of the supporting information chapter's standard table, such as COEI listing. Contained in the work package setup information (<***wpinfo***> see L.4.6.2). The element is EMPTY and all pertinent information is entered through its attributes.

a. DTD fragment for <***simref***>:

```
<!ELEMENT simref - o EMPTY>
<!ATTLIST simref
            itemno    CDATA                  #IMPLIED
            itemid    IDREF                  #IMPLIED
            simwp     (explistwp | coeibiiwp |
                       aalwp | toolidwp |
                       replacewp | mrpl |
                       xref)                 #REQUIRED
```

```
        simid     IDREF                    #IMPLIED>
```

b. Attributes for <***simref***>:

1. **ITEMNO** - Literal inclusion of an item number.
2. **ITEMID** - References the item identifier.
3. **SIMWP** - Identifies the supporting information work package containing the reference.
   (a) "EXPLISTWP" - Expendable and Durable Work Package.
   (b) "COEIBIIWP" - COEI and BII Work Package.
   (c) "AALWP" - AAL Work Package.
   (d) "TOOLIDWP" - Tool Identifier Work Package.
   (e) "REPLACEWP" -
   (f) "MRPL" - Mandatory Replace Part List table.
   (g) "XREF" - Internal cross reference to a non-listed work package.
4. **SIMID** - Reference to a supporting information work package identifier.

L.4.1.3.7 **Troubleshooting Location Pointer <*tslocptr*>.** The element<***tslocptr***> is used in conjunction with the TSLOCID that references the unique identifier of an object in a troubleshooting procedure located by a <***tslocptr***> element. This element can be invoked in a cross reference or receive external input.

a. DTD fragment for <***tslocptr***>:

```
<!ELEMENT tslocptr - o %conditions; >
<!ATTLIST tslocptr
            %navlink;
            obj-type      NAME                  #REQUIRED
            obj-id        IDREFS                #REQUIRED
            inputtype     (user | bit |
                           testset | exprtsys |
                           process)             #IMPLIED>
```

b. Attributes for <***tslocptr***> :

1. **%NAVLINK;** - Refer to common parameter entities for a complete description (see L.5.8).
2. **OBJ-TYPE** - Specifies the type of content or structure in the troubleshooting procedure.
3. **OBJ-ID** - Reference the object type identifier identified in the attribute "OBJ-TYPE"..
4. **INPUTTTYPE** - Specifies the type of input to be inserted at the troubleshooting location.
   (a) "USER" - Input is from user entered information.
   (b) "BIT" - Input is from a Built-In Test (BIT) equipment.
   (c) "TESTSET" - Input is from a test set connections or readings.
   (d) "EXPERTSYS" - Input is from an expert system.
   (e) "PROCESS" - Input is from a program (process).

L.4.1.3.8 **Cross Reference <*xref*>.** The element <***xref***> is used to specify an internal cross reference to other information in the TM. The attributes for <***xref***> are used to specify what is being referenced. The

composition system specifies how the ID referenced value(s) are to be resolved. The element can have multiple object ID references to reference several different objects to provide a single reference. An example is a reference to a work package and procedural steps. The element would use three attributes “WPID”, “STEPSTART” and “STEPEND” to identify the reference location and the composition system would generate “WP 0004 00 steps 3-5”. The element is EMPTY and all pertinent information is entered through its attributes.

a. DTD fragment for <***xref***>:

```
<!ELEMENT xref - o EMPTY >
<!ATTLIST xref
            taskid         IDREF            #IMPLIED
            wpid           IDREF            #IMPLIED
            stepstart      IDREF            #IMPLIED
            stepend        IDREF            #IMPLIED
            figid          IDREF            #IMPLIED
            callout        CDATA            #IMPLIED
            tableid        IDREF            #IMPLIED
            tslocid        IDREF            #IMPLIED
            pagelocid      IDREF            #IMPLIED
            pretext        CDATA            #IMPLIED
            posttext       CDATA            #IMPLIED
            %secur;>
```

b. Attributes for <***xref***> :

1. **TASKID** - Reference to a task identifier, such as "repair-replace" or "service upon receipt." The composition system will generate the task title.
2. **WPID** - Reference to a work package identifier. The composition system will generate the literal “WP” and work package sequence number.
3. **STEPSTART** - Reference to a procedural step identifier. The attribute is either a single step reference (composition system generates “step ” and step number) or the start of a reference to a range of steps (composition system generates “steps ” and the step number).
4. **STEPEND** - Reference to a ending procedural step identifier. The composition system generates “-” and the step number. Used only with the attribute “STEPSTART”.
5. **FIGID** - Reference to a figure identifier. The composition system will generate the literal “figure ” and the figure number.
6. **CALLOUT** - Supplies the literal callout value.
7. **TABLEID** - Reference to a table identifier. The composition system will generate the literal “table ” and the table number.
8. **TSLOCID** - Reference to a troubleshooting procedure object locator identifier defined in <***tswp***>. The composition system will generate the literal “page” and the page number.
9. **PAGELOCID** - References to a page location identifier defined in<***pageloc***>. The composition system will generate the literal “page” and the page number.
10. **PRETEXT** - Supplies any text that precedes the cross reference when resolved for display.

11. **POSTTEXT** - Supplies any text that follows the cross reference when resolved for display.
12. **%SECUR;** - Refer to common parameter entities for a complete description (see L.5.3).

L.4.1.4 **Footnote Elements.**

L.4.1.4.1 **Footnote<*ftnote*>.** The element <***ftnote***> is used for the body of a footnote in the document. The footnote information can be entered all in the same location or where footnote occurs. The footnote does not appear until the element <***ftnref***> is entered.

a. DTD fragment for <***ftnote***>:

```
<!ELEMENT ftnote - - (para+)>
<!ATTLIST ftnote
            id      ID            #REQUIRED
            mark    (ctr | mark)  "ctr"
            label   CDATA         #IMPLIED
            %secur;>
```

b. Attributes for <***ftnote***> :

1. **ID** - Specifies the footnote identifier.
2. **LABEL** - Used to specify the number or symbol assigned to the footnote and overrides autogeneration of the number or symbol by the composition system.
3. **MARK** - Used to specify the footnote prefix marking. When no value is entered the default value is “CTR”.
   (a) “CTR” - The footnote prefix is numbered.
   (b) “MARK” - The footnote prefix is symbol defined in the GPO Manual of Style.
4. **%SECUR;** - Refer to common parameter entities for a complete description (see L.5.3).

L.4.1.4.2 **Footnote Reference <*ftnref*>.** The element <***ftnref***> is used to reference a footnote appearing in the footnote page area. The element is EMPTY and all pertinent information is entered through its attributes.

a. DTD fragment for <***ftnref***> :

```
<!ELEMENT ftnref  - o EMPTY>
<!ATTLIST ftnref
           xrefid  IDREF   #REQUIRED>
```

b. Attributes for <***ftnref***> :

- **XREFID** - Reference to the footnote identifier. The composition system will generate the footnote text at the bottom of the referenced page.

L.4.1.5 **Textual Elements.**

L.4.1.5.1 **Title <*title*> .** The element <***title***> is used in multiple contexts within a TM to define the context to be discussed and is presented according to the composition system specifications of a particular context. The element contains the inline textual element (<***text***> see L.3.6) and an optional navigational reference (<***navref***> see L.4.7.10). The actual title is entered after the <***text***> element. The <***navref***> element is used

for linking title information to navigational references for fault conditions such as fault pass, clearing of faults and suspected faults, test values, and boolean expressions. The ***<navref>*** can be used to navigate from title information in a general information work package, into troubleshooting procedures in a troubleshooting information chapter.

a. DTD fragment for ***<title>***:

```
<!ELEMENT title - o (text, navref?)>
<!ATTLIST title
          %nodeloc;
          %refs;
          %secur;>
```

b. Attributes for ***<title>*** :

1. **%NODELOC;** - Refer to common parameter entities for a complete description (see L.5.9).
2. **%REFS;** - Refer to common parameter entities for a complete description (see L.5.2).
3. **%SECUR;** - Refer to common parameter entities for a complete description (see L.5.3).

L.4.1.5.2 **Subtitle *<subtitle>*.** The element ***<subtitle>*** is subordinate to a ***<title>*** and denotes that the paragraph to which it is attached is subordinate to one attached to a title. The element contains the the inline textual element (***<text>*** see L.3.6) and an optional navigational reference (***<navref>*** see L.4.7.10).

a. DTD fragment for ***<subtitle>***:

```
<!ELEMENT subtitle - o (text, navref?)>
<!ATTLIST subtitle
          %nodeloc;
          %refs;
          %secur;>
```

b. Attributes for ***<subtitle>***:

1. **%NODELOC;** - Refer to common parameter entities for a complete description (see L.5.9).
2. **%REFS;** - Refer to common parameter entities for a complete description (see L.5.2).
3. **%SECUR;** - Refer to common parameter entities for a complete description (see L.5.3).

L.4.1.5.3 **General Paragraph *<para>*.** The element ***<para>*** is used for paragraphs of text and can also contain embedded inline formatting, structural, referencing and content specific elements which are contained within the parameter entity ***%content;*** (see L.3.7)

a. DTD fragment for ***<para>***:

```
<!ELEMENT para - o (%content;) >
<!ATTLIST para
          bullet        %yesorno;    "0"
          parahead      CDATA        #IMPLIED
          %bodyatt;
          %secur;>
```

b. Attributes for <***para***> :

1. **BULLET** - Used to specify if the paragraph is to have a bullet preceding the text. A non-zero specifies to display a bullet and 0 not to use a bullet. The default value if no value is entered is no bullet.
2. **PARAHEAD** - Used to enter a paragraph heading before the paragraph narrative. The composition system specifies the text to be inlined and bold.
3. **%BODYATT;** - Refer to common parameter entities for a complete description (see L.5.1).
4. **%SECUR;** - Refer to common parameter entities for a complete description (see L.5.3).

L.4.1.6 **Formatting Elements.**

L.4.1.6.1 **Emphasis <*emphasis*>.** The element <***emphasis***> is used to emphasize text within the data stream. Emphasis elements should be used only in situations where the emphasized material is embedded in plain text or where an exception from the usual style of the element specified by the composition system is needed. Emphasis elements can be nested to specify a combination of styles, such as underlined bold italic. The emphasized text is enclosed in a <***emphasis***> start and end element. The element <***emphasis***> contains a parameter entity ***%text;*** (see L.3.6) which allows the embedding of data elements within the element.

a. DTD fragment for <***emphasis***>:

```
<!ELEMENT emphasis - - (%text;) >
<!ATTLIST emphasis
            emph         (caps | bold |
                          italic | bolditalic |
                          uline | strikeout)      #REQUIRED
            color         NAME                     #IMPLIED
            presentation  (interrupt | escape |
                           window)                 #IMPLIED>
```

b. Attributes for <***emphasis***> :

1. **EMPH** - Specifies the type of emphasis to be used.
   (a) “CAPS” - Specifies the data is capitalized all text.
   (b) “BOLD” - Specifies the data is bold text.
   (c) “ITALIC” - Specifies the data is italicized text.
   (d) “BOLDITALIC” - Specifies the data is bold and italicized text.
   (e) “ULINE” - Specifies the data is underlined text.
   (f) “STRIKEOUT” - Specifies the data is strikeout dash through each character.
2. **COLOR** - Specifies the color of the highlighted text.
3. **PRESENTATION** - In an electronic manual used to specify the type of window or dialog box. Declared values is from the list (INTERRUPT, ESCAPE, WINDOW).

L.4.1.6.2 **Emphasis Terms <*emphterm*>.** The element <***emphterm***> is used to denote placard items within the aircraft/cockpit that are referenced in operating procedures, such as switches and controls. Data that is enclosed by a start and end <***emphterm***> element will appear in all capital letters.

a. DTD fragment for <***emphterm***>:

```
<!ELEMENT emphterm - - (%text;)>
<!ATTLIST emphterm
            %refs;
            %secur;>
```

b. Attributes for <***emphterm***> :

1. **%REFS;** - Refer to common parameter entities for a complete description (see L.5.2).
2. **%SECUR;** - Refer to common parameter entities for a complete description (see L.5.3).

L.4.1.6.3 **Null <*null*>.** The element <***null***> is used for an element in a table entry which specifically indicates the entry contains no content. The element is EMPTY and all pertinent information is entered through its attributes.

a. DTD fragment for null:

```
<!ELEMENT null - o EMPTY>
<!ATTLIST null
            insert    (NA | NR |
                       dash | secure |
                       none)           "none"
            %refs;
            %secur;>
```

b. Attributes for <***null***> :

1. **INSERT** - Specifies the null type for the composition system to generate. When no value is entered the default value is “NONE”.
   (a) “NA” - Specifies the literal “NA”.
   (b) “NR” - Specifies the literal “NR ”.
   (c) “DASH” - Specifies the literal “– ”.
   (d) “SECURE ” - Specifies the information is classified and generates a blank.
   (e) “NONE” - Specifies the literal “ ”.
2. **%REFS;** - Refer to common parameter entities for a complete description (see L.5.2).
3. **%SECUR;** - Refer to common parameter entities for a complete description (see L.5.3).

L.4.1.6.4 **Verbatim <*verbatim*>.** The element <***verbatim***> is used for text to be presented verbatim as it is sequenced in the text stream and implies that SGML record ends (carriage returns) are to be treated as a new line separators. The element is presented in a monospaced font.

a. DTD fragment for <***verbatim***> :

```
<!ELEMENT verbatim - - CDATA >
<!ATTLIST verbatim
            allowbrk      %yesorno;      "1"
            %secur;>
```

b. Attributes for <***verbatim***> :

1. **ALLOWBRK** - Specifies whether or not verbatim information can be broken over a page boundary. An attribute value consisting only of zeros does not allow a break and any non-zero value specifies that a break is allowed. When no value is entered the default is to allow a break.
2. **%SECUR;** - Refer to common parameter entities for a complete description (see L.5.3).

L.4.1.7 **Changed Text <*change*>.** The element <***change***> is used for changed information at the paragraph level and below. Information changed at a higher level uses attributes for insertion change level ("INSCHLVL") and deletion change level ("DELCHLVL"). The element encloses the changed information only with a start and end element. The element <***change***> contains allowable elements (***%changetext;*** see L.3.9) that use the element.

a. DTD fragment for <***change***>:

```
<!ELEMENT change - - (%changetext;) >
<!ATTLIST change
          level    NUMBER        #REQUIRED
          date     CDATA         #IMPLIED
          change   (mod | add |
                    delete)      #IMPLIED
          mark     %yesorno;     #IMPLIED
          %secur;>
```

b. Attributes for <***change***> :

1. **LEVEL** - Used to specify the change level number.
2. **DATE** - Used to specify the effective change date.
3. **CHANGE** - Used to specify the change type.
   (a) "MOD" - Modified the original narrative.
   (b) "ADD" - Inserted new narrative.
   (c) "DELETE" - Deleted the narrative. The original narrative remains, but is suppressed during presentation.
4. **MARK** - Used to specify whether (non-zero number) or not (0) a side mark is to be used.
5. **%SECUR;** - Refer to common parameter entities for a complete description (see L.5.3).

L.4.1.8 **Procedural Elements.**

L.4.1.8.1 **Procedure <*proc*>.** The element <***proc***> is a set of steps to be followed to operate the equipment, to maintain the equipment or component, or to troubleshoot the equipment. The element contains <***navref***> or optional <***title***> followed by an optional and repeatable <***warning***>, <***caution***>, <***note***>, <***para***>, followed by required and repeatable steps <***step1***> and an optional <***navref***>.

a. DTD fragment for <***proc***>:

```
<!ELEMENT proc - o (navref | (title?, warning*, caution*, note*, para*,
```

```
                    step1+, navref?)) >
<!ATTLIST proc
          crewmember      CDATA        #IMPLIED
          applic          CDATA        #IMPLIED
          %navlink;
          %nodeloc;
          %faultstate;
          %bodyatt;
          %secur;>
```

b. Attributes for <***proc***> :

1. **CREWMEMBER** - The crew member specifically assigned to the procedure.
2. **APPLIC** - Specifies to what equipment configuration is applicable to the procedure.
3. **%NAVLINK;** - Refer to common parameter entities for a complete description (see L.5.8).
4. **%NODELOC;** - Refer to common parameter entities for a complete description (see L.5.9).
5. **%FAULTSTATE;** - Refer to common parameter entities for a complete description (see L.4.7.6).
6. **%BODYATT;** - Refer to common parameter entities for a complete description (see L.5.1).
7. **%SECUR;** - Refer to common parameter entities for a complete description (see L.5.3).

L.4.1.8.2 **Primary Step Level <*step1*>.** The element <***step1***> is the primary or fist level step in a procedure. The <***step1***> element is not to be confused as the first step and the element <***step2***> as the second step. The number proceeding the step is the procedure hierarchy and not counting the steps. The element contains either a navigation reference (<***navref***> see L.4.7.10) or the step narrative. The step narrative contains paragraph(s) (<***para***> see L.4.1.5.3) and/or paragraph(s) with required alert notices (<***specpara***> see L.4.1.1.1) followed by an optional navigation reference (<***navref***> see L.4.7.10) followed by optional second-level step (<***step2***>).

a. DTD fragment for <***step1***>:

```
<!ELEMENT step1 - o (navref | ((specpara | para)+, navref?, step2*)) >
<!ATTLIST step1
          crewmember      CDATA        #IMPLIED
          opsymref        IDREF        #IMPLIED
          applic          CDATA        #IMPLIED
          %navlink;
          %nodeloc;
          %faultstate;
          %bodyatt;
          %secur;>
```

b. Attributes for <***step1***>:

1. **CREWMEMBER** - The crew member specifically assigned to the step.
2. **OPSYMREF** - In an Aircraft Operator's TM or Pilot's Checklist, references the unique identifier of a symbol that qualifies the step.
3. **APPLIC** - Specifies the equipment configuration applicable to the step.

4. **%NAVLINK;** - Refer to common parameter entities for a complete description (see L.5.8).
5. **%NODELOC;** - Refer to common parameter entities for a complete description (see L.5.9).
6. **%FAULTSTATE;** - Refer to common parameter entities for a complete description (see L.4.7.6).
7. **%BODYATT;** - Refer to common parameter entities for a complete description (see L.5.1).
8. **%SECUR;** - Refer to common parameter entities for a complete description (see L.5.3).

L.4.1.8.3 **Second-Level Procedural Step <*step2*>.** The element <***step2***> is the second-level step in a procedure. The element contains paragraph(s) (<***para***> see L.4.1.5.3) and/or paragraph(s) with required alert notices (<***specpara***> see L.4.1.1.1) followed by optional third-level procedural step level (<***step3***>).

a. DTD fragment for <***step2***>:

```
<!ELEMENT step2 - o ((specpara | para)+, step3*) >
<!ATTLIST step2
          crewmember      CDATA        #IMPLIED
          opsymref        IDREF        #IMPLIED
          applic          CDATA        #IMPLIED
          %navlink;
          %bodyatt;
          %secur;>
```

b. Attributes for <***step2***>:

1. **CREWMEMBER** - The crew member specifically assigned to the step.
2. **OPSYMREF** - In an Aircraft Operator's TM or Pilot's Checklist, references the unique identifier of a symbol that qualifies the step.
3. **APPLIC** - Specifies the equipment configuration applicable to the step.
4. **%NAVLINK;** - Refer to common parameter entities for a complete description (see L.5.8).
5. **%BODYATT;** - Refer to common parameter entities for a complete description (see L.5.1).
6. **%SECUR;** - Refer to common parameter entities for a complete description (see L.5.3).

L.4.1.8.4 **Third-Level Procedural Step <*step3*>.** The element <***step3***> is the third-level step in a procedure. The element contains paragraph(s) (<***para***> see L.4.1.5.3) and/or paragraph(s) with required alert notices (<***specpara***> see L.4.1.1.1) followed by optional fourth-level procedural step level (<***step4***>).

a. DTD fragment for <***step3***>:

```
<!ELEMENT step3 - o ((specpara | para)+, step4*) >
<!ATTLIST step3
          crewmember      CDATA        #IMPLIED
          opsymref        IDREF        #IMPLIED
          applic          CDATA        #IMPLIED
          %navlink;
          %bodyatt;
          %secur;>
```

b. Attributes for <***step3***>:

1. **CREWMEMBER** - The crew member specifically assigned to the step.
2. **OPSYMREF** - In an Aircraft Operator's TM or Pilot's Checklist, references the unique identifier of a symbol that qualifies the step.
3. **APPLIC** - Specifies the equipment configuration applicable to the step.
4. **%NAVLINK;** - Refer to common parameter entities for a complete description (see L.5.8).
5. **%BODYATT;** - Refer to common parameter entities for a complete description (see L.5.1).
6. **%SECUR;** - Refer to common parameter entities for a complete description (see L.5.3).

L.4.1.8.5 **Fourth-Level Procedural Step <*step4*>.** The element <***step4***> is the fourth-level step in a procedure. The element contains paragraph(s) (<***para***> see L.4.1.5.3) and/or paragraph(s) with required alert notices (<***specpara***> see L.4.1.1.1) followed by optional fifth-level procedural step level (<***step5***>).

a. DTD fragment for <***step4***>:

```
<!ELEMENT step4 - o ((specpara | para)+, step5*) >
<!ATTLIST step4
          crewmember      CDATA        #IMPLIED
          opsymref        IDREF        #IMPLIED
          applic          CDATA        #IMPLIED
          %navlink;
          %bodyatt;
          %secur;>
```

b. Attributes for <***step4***>:

1. **CREWMEMBER** - The crew member specifically assigned to the step.
2. **OPSYMREF** - In an Aircraft Operator's TM or Pilot's Checklist, references the unique identifier of a symbol that qualifies the step.
3. **APPLIC** - Specifies the equipment configuration applicable to the step.
4. **%NAVLINK;** - Refer to common parameter entities for a complete description (see L.5.8).
5. **%BODYATT;** - Refer to common parameter entities for a complete description (see L.5.1).
6. **%SECUR;** - Refer to common parameter entities for a complete description (see L.5.3).

L.4.1.8.6 **Fifth-Level Procedural Step <*step5*>.** The element <***step5***> is the fifth-level step in a procedure. The element contains paragraph(s) (<***para***> see L.4.1.5.3) and/or paragraph(s) with required alert notices (<***specpara***> see L.4.1.1.1) followed by optional sixth-level procedural step level (<***step6***>).

a. DTD fragment for <***step5***>:

```
<!ELEMENT step5 - o ((specpara | para)+, step6*)>
<!ATTLIST step5
          crewmember      CDATA        #IMPLIED
          opsymref        IDREF        #IMPLIED
          applic          CDATA        #IMPLIED
          %navlink;
```

```
%bodyatt;
%secur;>
```

b. Attributes for <***step5***>:

1. **CREWMEMBER** - The crew member specifically assigned to the step.
2. **OPSYMREF** - In an Aircraft Operator's TM or Pilot's Checklist, references the unique identifier of a symbol that qualifies the step.
3. **APPLIC** - Specifies the equipment configuration applicable to the step.
4. **%NAVLINK;** - Refer to common parameter entities for a complete description (see L.5.8).
5. **%BODYATT;** - Refer to common parameter entities for a complete description (see L.5.1).
6. **%SECUR;** - Refer to common parameter entities for a complete description (see L.5.3).

L.4.1.8.7 **Sixth-Level Procedural Step <*step6*>.** The element <***step6***> is the sixth-level step in a procedure. The element contains paragraph(s) (<***para***> see L.4.1.5.3) and/or paragraph(s) with required alert notices (<***specpara***> see L.4.1.1.1) followed by optional seventh-level procedural step level (<***step7***>).

a. DTD fragment for <***step6***>:

```
<!ELEMENT step6 - o ((specpara | para)+, step7*) >
<!ATTLIST step6
          crewmember      CDATA        #IMPLIED
          opsymref        IDREF        #IMPLIED
          applic          CDATA        #IMPLIED
          %navlink;
          %bodyatt;
          %secur;>
```

b. Attributes for <***step6***>:

1. **CREWMEMBER** - The crew member specifically assigned to the step.
2. **OPSYMREF** - In an Aircraft Operator's TM or Pilot's Checklist, references the unique identifier of a symbol that qualifies the step.
3. **APPLIC** - Specifies the equipment configuration applicable to the step.
4. **%NAVLINK;** - Refer to common parameter entities for a complete description (see L.5.8).
5. **%BODYATT;** - Refer to common parameter entities for a complete description (see L.5.1).
6. **%SECUR;** - Refer to common parameter entities for a complete description (see L.5.3).

L.4.1.8.8 **Seventh-Level Procedural Step <*step7*>.** The element <***step7***> is the seventh-level step in a procedure. The element contains paragraph(s) (<***para***> see L.4.1.5.3) and/or paragraph(s) with required alert notices (<***specpara***> see L.4.1.1.1) followed by optional eighth-level procedural step level (<***step8***>).

a. DTD fragment for <***step7***>:

```
<!ELEMENT step7 - o ((specpara | para)+, step8*)>
<!ATTLIST step7
          crewmember      CDATA        #IMPLIED
```

```
          opsymref        IDREF        #IMPLIED
          applic          CDATA        #IMPLIED
          %navlink;
          %bodyatt;
          %secur;>
```

b. Attributes for <***step7***>:

1. **CREWMEMBER** - The crew member specifically assigned to the step.
2. **OPSYMREF** - In an Aircraft Operator's TM or Pilot's Checklist, references the unique identifier of a symbol that qualifies the step.
3. **APPLIC** - Specifies the equipment configuration applicable to the step.
4. **%NAVLINK;** - Refer to common parameter entities for a complete description (see L.5.8).
5. **%BODYATT;** - Refer to common parameter entities for a complete description (see L.5.1).
6. **%SECUR;** - Refer to common parameter entities for a complete description (see L.5.3).

L.4.1.8.9 **Eighth-Level Procedural Step <*step8*>.** The element <***step8***> is the eighth-level step in a procedure. The element contains paragraph(s) (<***para***> see L.4.1.5.3) and/or paragraph(s) with required alert notices (<***specpara***> see L.4.1.1.1).

a. DTD fragment for <***step8***>:

```
<!ELEMENT step8 - o ((specpara | para)+)>
<!ATTLIST step8
          crewmember      CDATA        #IMPLIED
          opsymref        IDREF        #IMPLIED
          applic          CDATA        #IMPLIED
          %navlink;
          %bodyatt;
          %secur;>
```

b. Attributes for <***step8***>:

1. **CREWMEMBER** - The crew member specifically assigned to the step.
2. **OPSYMREF** - In an Aircraft Operator's TM or Pilot's Checklist, references the unique identifier of a symbol that qualifies the step.
3. **APPLIC** - Specifies the equipment configuration applicable to the step.
4. **%NAVLINK;** - Refer to common parameter entities for a complete description (see L.5.8).
5. **%BODYATT;** - Refer to common parameter entities for a complete description (see L.5.1).
6. **%SECUR;** - Refer to common parameter entities for a complete description (see L.5.3).

L.4.2 **CALS Table.**

L.4.2.1 **CALS Table <*table*>.** The element <***table***> is the CALS table model. The element contains a table title (<***title***> see L.4.1.5.1) followed by table group(s) (<***tgroup***>).

a. DTD fragment for <***table***>:

```
<!ELEMENT table - - (title, tgroup+)>
```

```
<!ATTLIST table
            %navlink;
            tabstyle    NMTOKEN           #IMPLIED
            tablenum    %yesorno;         "1"
            tocentry    %yesorno;         "1"
            frame       (top | bottom |
                         topbot | all |
                         sides | none)    #IMPLIED
            colsep      %yesorno;         #IMPLIED
            rowsep      %yesorno;         #IMPLIED
            orient      (port | land)     #IMPLIED
            %refs;
            %secur;>
```

b. Attributes for <***table***>:

1. **%NAVLINK;** - Refer to common parameter entities for a complete description (see L.5.8).
2. **TABSTYLE** - Specified an unique table style defined in the style sheet.
3. **TABLENUM** - Specifies if the table is number, a non-zero number. If no value is entered the default value is to number the table.
4. **TOCENTRY** - Specifies if the table is reference in the TOC. If no value is entered the default value is to include in the TOC.
5. **FRAME** - Specifies the position of the outer table rules (border).
   (a) “TOP” - Top rule.
   (b) “BOTTOM” - Bottom rule.
   (c) “TOPBOT” - Both top and bottom rule.
   (d) “ALL” - All sides ruled.
   (e) “SIDES” - Both left and right rule.
   (f) “NONE” - Unruled.
6. **COLSEP** - Default for all items in this table. If non-zero , display the internal column rulings to the right of each item. If zero, do not display column rulings. Ignored for the last column, where the frame setting applies.
7. **ROWSEP** - Default for all items in this table. If non-zero , display the internal row rulings below each item. If zero, do not display row rulings. Ignored for the last row, where the frame setting applies.
8. **ORIENT** - Orientation of the entire table.
   (a) “PORT” - The table writing direction, along rows, is the same as marginal text.
   (b) “LAND” - The table writing direction is 90° counterclockwise to marginal text.
9. **%REFS;** - Refer to common parameter entities for a complete description (see L.5.2).
10. **%SECUR;** - Refer to common parameter entities for a complete description (see L.5.3).

L.4.2.1.1 **Table Group <*tgroup*>.** The element <***tgroup***> identifies a new portion of a table. If a new <***colspec***> and/or <***spanspec***> is provided, it replaces a previous one. The element contains optional column

specification(s) (<***colspec***>), optional spanned column specification(s) (<***spanspec***>), an optional table head (<***thead***>), an optional table foot (<***tfoot***>) and a table body (<***tbody***>). The table can only contain up to and including a fourth level procedural step.

a. DTD fragment for <***tgroup***>:

```
<!ELEMENT tgroup - o (colspec*, spanspec*, thead?, tfoot?, tbody) -(step5)>
<!ATTLIST tgroup
            cols         NUMBER             #REQUIRED
            tgroupstyle  NMTOKEN            #IMPLIED
            colsep       %yesorno;          #IMPLIED
            rowsep       %yesorno;          #IMPLIED
            align        (left | right |
                          center | justify |
                          char)             "left"
            charoff      NUTOKEN            "50"
            char         CDATA              " "
            %secur;>
```

b. Attributes for <***tgroup***>:

1. **COLS** - Number of columns in the table.
2. **TGROUPSTYLE** - A unique table group style defined in the style sheet.
3. **COLSEP** - Default for all items in this table group. If non-zero , display the internal column rulings to the right of each item. If zero, do not display column rulings. Ignored for the last column, where the frame setting applies. If no value is entered, inherited from table.
4. **ROWSEP** - Default for all items in this table group. If non-zero , display the internal row rulings below each item. If zero, do not display row rulings. Ignored for the last row, where the frame setting applies. If no value is entered, inherited from table.
5. **ALIGN** - Text horizontal position within the column. If no value is entered the default value is flush left alignment.
   (a) “LEFT” - Alignment is flush left.
   (b) “RIGHT” - Alignment is flush right.
   (c) “CENTER” - Alignment is centered.
   (d) “JUSTIFY” - Alignment is right/left justified.
   (e) “CHAR” - Alignment is on the left most of the character specified in attribute “CHAR” and position by attribute “CHAROFF”.
6. **CHAROFF** - For attribute **ALIGN** with a value “CHAR”, percent of the current width to the left of the alignment character. If no value is entered the default value is 50%.
7. **CHAR** - For attribute **ALIGN** with a value “CHAR”, the value is aligned on the first character occurrence. If no value is entered the default value is a blank character.
8. **%SECUR;** - Refer to common parameter entities for a complete description (see L.5.3).

L.4.2.1.1.1 **Column Specification <*colspec*>.** The element <***colspec***> is the column specification. A column specification is needed for each column in the table. The element is EMPTY and all pertinent information is entered through its attributes.

a. DTD fragment for <***colspec***>:

```
<!ELEMENT colspec - o EMPTY >
<!ATTLIST colspec
            colnum    NUMBER              #IMPLIED
            colname   NMTOKEN             #IMPLIED
            align     (left | right |
                       center | justify |
                       char)              #IMPLIED
            charoff   NUTOKEN             #IMPLIED
            char      CDATA               #IMPLIED
            colwidth  CDATA               #IMPLIED
            colsep    %yesorno;           #IMPLIED
            rowsep    %yesorno;           #IMPLIED>
```

b. Attributes for <***colspec***>:

1. **COLNUM** - Specifies the column number, start counting from 1 at the leftmost column. If no value is entered the column will be numbered automatically in the order entered.
2. **COLNAME** - Specifies the name of the column, used to specify the position in a row, or the start or end of a horizontal spanned column. If no value is entered the composition system can only allow cell entries to occur sequentially and required for each column in the row and no spanned columns is permitted.
3. **ALIGN** - Text horizontal position within the column. If no value is entered, inherited from table group.
   (a) “LEFT” - Alignment is flush left.
   (b) “RIGHT” - Alignment is flush right.
   (c) “CENTER” - Alignment is centered.
   (d) “JUSTIFY” - Alignment is right/left justified.
   (e) “CHAR” - Alignment is on the leftmost of the character specified in attribute “CHAR” and position by attribute “CHAROFF”.
4. **CHAROFF** - For attribute **ALIGN** with a value “CHAR”, percent of the current width to the left of the alignment character. If no value is entered the default value is 50%.
5. **CHAR** - For attribute **ALIGN** with a value “CHAR”, the value is aligned on the first character occurrence. If no value is entered the default value is a blank character.
6. **COLSEP** - Default for all items in this table group. If non-zero , display the internal column rulings to the right of each item. If zero, do not display column rulings. Ignored for the last column, where the frame setting applies. If no value is entered, inherited from table group.
7. **ROWSEP** - Default for all items in this table group. If non-zero , display the internal row rulings below each item. If zero, do not display row rulings. Ignored for the last row, where the frame setting applies. If no value is entered, inherited from table group.

L.4.2.1.1.2 **Spanned Column Specification <*spanspec*>.** The element **<*spanspec*>** is horizontal span of columns and associated attributes that can subsequently be referenced by its “SPANNAME” to provide

attributes repeatedly used in the entries or entry tables in several rows of the table group controlled by the column specification. The element is EMPTY and all pertinent information is entered through its attributes.

a. DTD fragment for <***spanspec***>:

```
<!ELEMENT spanspec - o EMPTY >
<!ATTLIST spanspec
            namest     NMTOKEN            #REQUIRED
            nameend    NMTOKEN            #REQUIRED
            spanname   NMTOKEN            #REQUIRED
            align      (left | right |
                        center | justify |
                        char)             "center"
            charoff    NUTOKEN            #IMPLIED
            char       CDATA              #IMPLIED
            colsep     %yesorno;          #IMPLIED
            rowsep     %yesorno;          #IMPLIED>
```

b. Attributes for <***spanspec***>:

1. **NAMEST** - The leftmost column name, from <***colspec***>, of the spanned columns.
2. **NAMEEND** - The rightmost column name, from <***colspec***>, of the spanned columns.
3. **SPANNAME** - The horizontal span name.
4. **ALIGN** - Text horizontal position within the column. If no value is entered defaults to centered.
   (a) “LEFT” - Alignment is flush left.
   (b) “RIGHT” - Alignment is flush right.
   (c) “CENTER” - Alignment is centered.
   (d) “JUSTIFY” - Alignment is right/left justified.
   (e) “CHAR” - Alignment is on the leftmost of the character specified in attribute “CHAR” and position by attribute “CHAROFF”.
5. **CHAROFF** - For attribute **ALIGN** with a value “CHAR”, percent of the current width to the left of the alignment character. If no value is entered the default value is 50%.
6. **CHAR** - For attribute **ALIGN** with a value “CHAR”, the value is aligned on the first character occurrence. If no value is entered the default value is a blank character.
7. **COLSEP** - Default for all items in this table group. If non-zero , display the internal column rulings to the right of each item. If zero, do not display column rulings. Ignored for the last column, where the frame setting applies. If no value is entered, inherited from table group.
8. **ROWSEP** - Default for all items in this table group. If non-zero , display the internal row rulings below each item. If zero, do not display row rulings. Ignored for the last row, where the frame setting applies. If no value is entered, inherited from table group.

L.4.2.1.1.3 **Table Body <*tbody*>.** Identifies the body of the table. The element contains rows (<***row***>).

a. DTD fragment for <***tbody***>:

```
<!ELEMENT tbody - o (row)+ >
<!ATTLIST tbody
            valign  (top | middle | bottom)    "top"
            %secur;>
```

b. Attributes for <***tbody***>:

1. **VALIGN** - Specifies the vertical positioning within the cell entries. If no value is entered the default value is top.
   (a) "TOP" - Align to the top of the cell entry.
   (b) "MIDDLE" - Align to the vertical middle of the cell entry.
   (c) "BOTTOM" - Align to the bottom of the cell entry.

L.4.2.1.1.3.1 **Row <*row*>.** Identifies the row information in a table group. The element contains cell entries (<***entry***>). The element <***entrytbl***> is not supported by must composition system and is suggested not use the element in developing a table.

a. DTD fragment for <***row***>:

```
<!ELEMENT row - o (entry | entrytbl)+ >
<!ATTLIST row
            rowsep    %yesorno;    #IMPLIED
            %secur;>
```

b. Attributes for <***row***>:

1. **ROWSEP** - Default for all items in this table group. If non-zero , display the internal row rulings below each item. If zero, do not display row rulings. Ignored for the last row, where the frame setting applies. If no value is entered, inherited from table group.
2. **%SECUR;** - Refer to common parameter entities for a complete description (see L.5.3).

L.4.2.1.1.3.2 **Entry <*entry*>.** The element <***entry***> identifies an entry in a table. When no attribute value is specified in "COLNAME", "NAMEST", "NAMEEND" or "SPANNAME" the cell entries will fill consecutively in the column. The element contains table content inline text (<***tabcontent***> see L.3.8). Table may not occur within this element.

a. DTD fragment for <***entry***>:

```
<!ELEMENT entry - o (%tabcontent;) -(table)>
<!ATTLIST entry
            %navlink;
            colname    NMTOKEN             #IMPLIED
            namest     NMTOKEN             #IMPLIED
            nameend    NMTOKEN             #IMPLIED
            spanname   NMTOKEN             #IMPLIED
            morerows   NUMBER              "0"
```

```
colsep     %yesorno;           #IMPLIED
rowsep     %yesorno;           #IMPLIED
rotate     %yesorno;           "0"
valign     (top | bottom |
            middle)            "top"
align      (left | right |
            center | justify |
            char)              #IMPLIED
charoff    NUTOKEN             #IMPLIED
char       CDATA               #IMPLIED
%secur;>
```

b. Attributes for <***entry***>:

1. **%NAVLINK;** - Refer to common parameter entities for a complete description (see L.5.8).
2. **COLNAME** - Specifies the column name the entry is positioned. The column name is defined in the <***colspec***> attribute. Omit if “SPANNAME”, “NAMEST” or “NAMEEND” is present.
3. **NAMEST** - Name of the leftmost span column name. The column name is defined in the <***colspec***> attribute.
4. **NAMEEND** - Name of the rightmost span column name. The column name is defined in the <***colspec***> attribute.
5. **SPANNAME** - Specifies the spanned column name the entry is positioned. The spanned column name is defined in the <***spanspec***> attribute.
6. **MOREROWS** - Number of additional rows in a vertical straddle. When no value is entered the default is no additional rows.
7. **COLSEP** - Default for all items in this table group. If non-zero , display the internal column rulings to the right of each item. If zero, do not display column rulings. Ignored for the last column, where the frame setting applies. If no value is entered, inherited from column specification or spanned column specification.
8. **ROWSEP** - Default for all items in this table group. If non-zero , display the internal row rulings below each item. If zero, do not display row rulings. Ignored for the last row, where the frame setting applies. If no value is entered, inherited from row.
9. **ROTATE** - The narrative in rotated 90° counterclockwise, for a non-zero value. If no value is entered the default is no rotations.
10. **VALIGN** - Specifies the vertical positioning within the cell entries. If no value is entered the default is inherited from row.
    (a) “TOP” - Align to the top of the cell entry.
    (b) “MIDDLE” - Align to the vertical middle of the cell entry.
    (c) “BOTTOM” - Align to the bottom of the cell entry.
11. **ALIGN** - Text horizontal position within the column. If no value is entered defaults is inherited from either column or spanned column specification.
    (a) “LEFT” - Alignment is flush left.

(b) “RIGHT” - Alignment is flush right.

(c) “CENTER” - Alignment is centered.

(d) “JUSTIFY” - Alignment is right/left justified.

(e) “CHAR” - Alignment is on the leftmost of the character specified in attribute “CHAR” and position by attribute “CHAROFF”.

12. **CHAROFF** - For attribute **ALIGN** with a value “CHAR”, percent of the current width to the left of the alignment character. If no value is entered defaults is inherited from either column or spanned column specification.
13. **CHAR** - For attribute **ALIGN** with a value “CHAR”, the value is aligned on the first character occurrence. If no value is entered defaults is inherited from either column or spanned column specification.
14. **%SECUR;** - Refer to common parameter entities for a complete description (see L.5.3).

L.4.2.1.1.3.3 **Entry Table <*entrytbl*>.** The element <***entrytbl***> is table in a cell. This element should not be used since most composition system can not implement this element.

L.4.2.1.1.4 **Table Head <*thead*>.** The element <***thead***> is the heading information in a displayed at the top of the table and again at the top of any continuation after a physical break between rows in the table body. The element contains optional column specification(s) (<***colspec***> see L.4.2.1.1.1) and rows (<***row***> see L.4.2.1.1.3.1). Entry table may not occur within this element.

a. DTD fragment for <***thead***>:

```
<!ELEMENT thead - o (colspec*, row+) -(entrytbl) >
<!ATTLIST thead
            valign  (top | middle | bottom)    "bottom"
            %secur;>
```

b. Attributes for <***thead***>:

1. **VALIGN** - Specifies the vertical positioning within the cell entries. If no value is entered the default value is bottom.

   (a) “TOP” - Align to the top of the cell entry.

   (b) “MIDDLE” - Align to the vertical middle of the cell entry.

   (c) “BOTTOM” - Align to the bottom of the cell entry.

L.4.2.1.1.5 **Table Foot <*tfoot*>.** The element <***tfoot***> is the footer information in a displayed at the bottom of the table and again at the bottom of any continuation after a physical break between rows in the table body. The element contains optional column specification(s) (<***colspec***> see L.4.2.1.1.1) and rows (<***row***> see L.4.2.1.1.3.1). Entry table may not occur within this element.

a. DTD fragment for <***tfoot***>:

```
<!ELEMENT tfoot - o (colspec*, row+) -(entrytbl) >
<!ATTLIST tfoot
            valign  (top | middle | bottom)    "top"
            %secur;>
```

b. Attributes for <***thead***>:

1. **VALIGN** - Specifies the vertical positioning within the cell entries. If no value is entered the default value is top.
   (a) "TOP" - Align to the top of the cell entry.
   (b) "MIDDLE" - Align to the vertical middle of the cell entry.
   (c) "BOTTOM" - Align to the bottom of the cell entry.

L.4.3 **Simple Table.**

L.4.3.1 **Simple Table <*tabmat*>.** The element <***tabmat***> is used for simple tabular material which has fewer elements to specify than a CALS table (<***table***>). A simple table can have the look of a CALS table, but is not numbered. The default simple table has only two columns, although more columns may be defined, each column is of equal width. Other characteristics that can be defined include: width of the table; whether the column has a leader on the right side of the content; alignment of the text; and a limited set of table head style characteristics. The element contains an optional table title (<***title***> see L.4.1.5.1), table column specification and heading (<***tabspec***>) and table body (<***tabbody***>).

a. DTD fragment for <***tabmat***>:

```
<!ELEMENT tabmat - - (title?, tabspec*, tabbody)>
<!ATTLIST tabmat
            %navlink;
            width       (page | column)   "column"
            colnos      NUMBER            "2"
            %secur;
            %refs;>
```

b. Attributes for <***tabmat***>:

1. **%NAVLINK;** - Refer to common parameter entities for a complete description (see L.5.8).
2. **WIDTH** - Specifies the table width relative to margin width ("PAGE") or the column width ("COLUMN"). If no value is entered the default is column width.
3. **COLNOS** - Number of columns in the table. If no value is entered the default value is "2".
4. **%SECUR;** - Refer to common parameter entities for a complete description (see L.5.3).
5. **%REFS;** - Refer to common parameter entities for a complete description (see L.5.2).

L.4.3.1.1 **Simple Table Column Specification and Heading <*tabspec*>.** The element <***tabspec***> specifies the column specifications and the column's heading. The element must be specified for each column in the simple table.

a. DTD fragment for <***tabspec***>:

```
<!ELEMENT tabspec - o EMPTY>
<!ATTLIST tabspec
            no            NUMBER                #IMPLIED
            align         (left | right |
```

```
                 center | decimal)   "left"
leader          %yesorno;            "0"
head            CDATA                #IMPLIED
boldhd          %yesorno;            "1"
headrule        %yesorno;            "0">
```

b. Attributes for <***tabspec***>:

1. **NO** - Specifies the column number, start counting from 1 at the leftmost column. If no value is entered the column will be numbered automatically in the order entered.
2. **ALIGN** - Text horizontal position within the column. If no value is entered the default value is flush left alignment.
   (a) “LEFT” - Alignment is flush left.
   (b) “RIGHT” - Alignment is flush right.
   (c) “CENTER” - Alignment is centered.
   (d) “DECIMAL” - Alignment is on the leftmost decimal point.
3. **LEADER** - Specifies whether in the table body contains a dot leader to the right after the content, non-zero attribute value. If no value is entered the default is no dot leader.
4. **HEAD** - Column heading.
5. **BOLDHD** - Specifies whether the heading is bold, non-zero attribute value. If no value is entered the default is bold.
6. **HEADRULE** - Specifies whether the heading is underlined. If no value is entered the default is plain.

L.4.3.1.2 **Simple Table Body <*tabbody*>.** The element <***tabbody***> is the table body and contains table rows (<***tabrow***>).

a. DTD fragment for <***tabbody***>:

```
<!ELEMENT tabbody - o (tabrow)+>
<!ATTLIST tabbody
            %secur;
            %refs;>
```

b. Attributes for <***tabbody***>:

1. **%SECUR;** - Refer to common parameter entities for a complete description (see L.5.3).
2. **%REFS;** - Refer to common parameter entities for a complete description (see L.5.2).

L.4.3.1.2.1 **Simple Table Row <*tabrow*>.** The element <***tabrow***> is the table row and contains table entry (<***tabentry***>).

a. DTD fragment for <***tabrow***>:

```
<!ELEMENT tabrow - o (tabentry, tabentry+)>
```

```
<!ATTLIST tabrow
            %secur;
            %refs;>
```

b. Attributes for <***tabentry***>:

1. **%SECUR;** - Refer to common parameter entities for a complete description (see L.5.3).
2. **%REFS;** - Refer to common parameter entities for a complete description (see L.5.2).

L.4.3.1.2.2 **Simple Table Entry <*tabentry*>.** The element <***tabentry***> is the cell entry in the simple table. The element contains paragraph content (***%content;*** see L.3.7). Table, graphic and figure are not allowed in this element.

a. DTD fragment for <***tabentry***>:

```
<!ELEMENT tabentry - o (%content;) -(table | graphic | figure)>
<!ATTLIST tabentry
            %secur;
            %refs;>
```

b. Attributes for <***tabentry***>:

1. **%SECUR;** - Refer to common parameter entities for a complete description (see L.5.3).
2. **%REFS;** - Refer to common parameter entities for a complete description (see L.5.2).

L.4.4 **Figures and Graphics.**

L.4.4.1 **Figure <*figure*>.** The element <***figure***> may contain graphic illustrations, multi-sheet illustrations, graphic charts, or text illustrations, etc. Figures may be numbered or unnumbered. The element contains either an illustration(s) or verbatim narrative. The illustration group contains an optional figure title (<***title***> see L.4.1.5.1), an optional navigation reference (<***navref***> see L.4.7.10) followed by either at least one subfigure (<***subfig***>) or at least one illustration (<***graphic***>) followed by optional legend(s) (<***table***> (see L.4.2.1) or <***legend***>). The verbatim narrative group contains the verbatim narrative (<***verbatim***>) and a figure title (<***title***> see L.4.1.5.1).

a. DTD fragment for <***figure***>:

```
<!ELEMENT figure - - ((title?, navref?, (subfig+ | graphic+),
                       (table | legend)*) | (verbatim, title))>
<!ATTLIST figure
          %navlink;
          %nodeloc;
          fignum        %yesorno;                 "0"
          figtype       (normal-page | fo-inline |
                         fo-rear)                 "normal-page"
          fo-size       (25x11 | 35x11 |
                         45x11)                   #IMPLIED
          tocentry      %yesorno;                 "1"
          placement     (above | above-anchor |
                         below | below-anchor |
```

```
                 facingpg | facing-anchor |
                 immediate)                "immediate"
orient          (port | land)              "port"
size            (eighth | quarter |
                 half | full)              #IMPLIED
shape           (vertical | horizontal)   #IMPLIED
anchorref        NMTOKEN                  #IMPLIED
%refs;
%secur;>
```

b. Attributes for <***figure***> :

1. **%NAVLINK;** - Refer to common parameter entities for a complete description (see L.5.8).
2. **%NODELOC;** - Refer to common parameter entities for a complete description (see L.5.9).
3. **FIGNUM** - Specifies whether the figure should be numbered, a non-zero value. If no value is entered the default value is no figure number.
4. **FIGTYPE** - Specifies the figure size and location.
   (a) “NORMAL-PAGE” - Current page size and inline with the narrative.
   (b) “FO-INLINE” - Oversized (foldout) page and inline with the narrative. Page size is determined by the attribute “FO-SIZE”.
   (c) “FO-REAR” - Oversized (foldout) page and is located at the end of the manual. Page size is determined by the attribute “FO-SIZE”.
5. **FO-SIZE** - If **FIGTYPE** attribute is specified as either "FO-INLINE" or "FO-REAR", this attribute is used to specify the size of the foldout.
   (a) “25X11” - Foldout size is 25" by 11".
   (b) “35X11” - Foldout size is 35" by 11".
   (c) “45X11” - Foldout size is 45" by 11".
6. **TOCENTRY** - Specifies whether the figure title should appear in the table of contents, a non-zero value. If no value is entered the default is to include in the TOC.
7. **PLACEMENT** - Indicates the placement of the figure relative to the element’s position within text elements or relative to an anchor element. If no value is entered the default is immediate.
   (a) “ABOVE” - Float the graphic to the top of the same page the figure is located.
   (b) “ABOVE-ANCHOR” - Float the graphic to the top of the same page the figure anchor (<***anchor***> see L.4.1.3.1) is located.
   (c) “BELOW” - Float the graphic to the bottom of the same page the figure is located.
   (d) “BELOW-ANCHOR” - Float the graphic to the bottom of the same page the figure anchor (<***anchor***> see L.4.1.3.1) is located.
   (e) “FACINGPG” - Float the graphic to the facing page where the figure reference is located.
   (f) “FACING-ANCHOR” - Float the graphic to the facing page where the figure anchor (<***anchor***> see L.4.1.3.1) is located.
   (g) “IMMEDIATE” - Place the figure immediately inline where the figure reference or figure anchor location.

8. **ORIENT** - Specifies the orientation of the figure. If no value is entered the default is portrait.

(a) "PORT" - Indicating that the top of the graphic points toward the top of a portrait page "LAND" - Indicating that the top of the graphic points toward the top of a landscape page.

9. **SIZE** - Fractional part of a page occupied by the figure.

(a) “EIGHTH” - The figure is scaled to an eighth page.

(b) “QUARTER” - The figure is scaled to a quarter page.

(c) “HALF” - The figure is scaled to a half page.

(d) “FULL” - The figure is a full page.

10. **SHAPE** - Specifies whether the longer side of the figure’s repro area is on the vertical or horizontal side.

(a) “VERTICAL” - The long size is vertical.

(b) “HORIZONTAL” - The long size is horizontal.

11. **ANCHORREF** - Non-ID reference to an anchor name; the anchor element that is being referenced is placed in the text.

12. **%REFS;** - Refer to common parameter entities for a complete description (see L.5.2).

13. **%SECUR;** - Refer to common parameter entities for a complete description (see L.5.3).

L.4.4.1.1 **Subfigure <*subfig*>.** The element <***subfig***> is used to enter multiple sheets within a figure. The element contains a illustration (<***graphic***>) which may be followed by an optional legend(s) (<***table***> (see L.4.2.1) or <***legend***>).

a. DTD fragment for <***subfig***>:

```
<!ELEMENT subfig - - (graphic, (table | legend)*)>
<!ATTLIST subfig
          orient   (port | land)           "port"
          size     (eighth | quarter |
                    half | full)           #IMPLIED
          shape    (vertical | horizontal) #IMPLIED
          id       ID                      #IMPLIED
          idrefs   IDREFS                  #IMPLIED
          %navlink;
          %nodeloc;>
```

b. Attributes for <***subfig***> :

1. **ORIENT** - Specifies the orientation of the figure. If no value is entered the default is portrait.

(a) "PORT" - Indicating that the top of the graphic points toward the top of a portrait page "LAND" - Indicating that the top of the graphic points toward the top of a landscape page.

2. **SIZE** - Fractional part of a page occupied by the figure.

(a) “EIGHTH” - The figure is scaled to an eighth page.

(b) “QUARTER” - The figure is scaled to a quarter page.

(c) “HALF” - The figure is scaled to a half page.

(d) “FULL” - The figure is a full page.

3. **SHAPE** - Specifies whether the longer side of the figure’s repro area is on the vertical or horizontal side.
   (a) “VERTICAL” - The long size is vertical.
   (b) “HORIZONTAL” - The long size is horizontal.
4. **ID** - Specifies the subfigure identifier.
5. **IDREFS** - References to the figure (contained in the subfigure) identifier(s).
6. **%NAVLINK;** - Refer to common parameter entities for a complete description (see L.5.8).
7. **%NODELOC;** - Refer to common parameter entities for a complete description (see L.5.9).

L.4.4.1.2 **Illustration <*graphic*>.** The element <***graphic***> identifies an illustration, which is contained in an external entity. The illustration is stored either as vector (MIL-D-28000 or MIL-D-28003) or raster (MIL-R-28002) data and is used as an illustration in the document.

a. DTD fragment for <***graphic***>:

```
<!ELEMENT graphic - o EMPTY >
<!ATTLIST graphic
          boardno    ENTITY                    #REQUIRED
          graphsty   NMTOKEN                   #IMPLIED
          llcordra   NUTOKEN                   #IMPLIED
          rucordra   NUTOKEN                   #IMPLIED
          size       (eighth | quarter |
                      half | full)             #IMPLIED
          shape      (vertical | horizontal)   #IMPLIED
          hscale     NUTOKEN                   #IMPLIED
          vscale     NUTOKEN                   #IMPLIED
          scalefit   %yesorno;                 #IMPLIED
          hplace     (left | right |
                      center | none)           #IMPLIED
          vplace     (top | bottom |
                      middle | non)            #IMPLIED
          coordst    NUTOKEN                   #IMPLIED
          coordend   NUTOKEN                   #IMPLIED
          rotation   NUMBER                    #IMPLIED
          %navlink;
          %nodeloc;
          %refs;
          %secur;>
```

b. Attributes for <***graphic***> :

1. **BOARDNO** - Specifies the name of the entity containing the external graphic file.
2. **GRAPHSTY** - Provided to allow for cases where a "grphstyl" specified in a FOSI is to be used.

3. **LLCORDRA** - Specifies the left lower coordinate pair of a portion of the graphic to be placed in the entire or a portion of the repro area. The coordinate pair is separated by a comma.
4. **RUCORDRA** - Specifies the right upper coordinate pair of a portion of the graphic to be placed in the entire or a portion of the repro area. The coordinate pair is separated by a comma.
5. **SIZE** - Fractional part of a page occupied by the figure.
   (a) "EIGHTH" - The figure is scaled to an eighth page.
   (b) "QUARTER" - The figure is scaled to a quarter page.
   (c) "HALF" - The figure is scaled to a half page.
   (d) "FULL" - The figure is a full page.
6. **SHAPE** - Specifies whether the longer side of the figure's repro area is on the vertical or horizontal side.
   (a) "VERTICAL" - The long size is vertical.
   (b) "HORIZONTAL" - The long size is horizontal.
7. **HSCALE** - Specifies the horizontal scaling factor. The number 100 is unscaled graphic.
8. **VSCALE** - Specifies the vertical scaling factor. The number 100 is unscaled graphic.
9. **SCALEFIT** - Specifies the characteristic that allows the graphic to be scaled as needed to fit the size of the reproduction area, when attribute value is non-zero.
10. **HPLACE** - Specifies the horizontal placement in the available repro area. The position is flushed left, flushed right, centered or none.
11. **VPLACE** - Specifies the vertical placement in the available repro area. The position is top, bottom, centered or none.
12. **ROTATION** - Specifies the degree of rotation of the graphic.
13. **COORDST** - Specifies the left lower coordinate pair, separated by a comma, of a portion of the repro area. Start position for placement of the portion of the graphic specified by LLCORDRA and RUCORDRA.
14. **COORDEND** - Specifies the right upper coordinate pair, separated by a comma, of a portion of the repro area. End position for placement of the portion of the graphic specified by LLCORDRA and RUCORDRA.
15. **%NAVLINK;** - Refer to common parameter entities for a complete description (see L.5.8).
16. **%NODELOC;** - Refer to common parameter entities for a complete description (see L.5.9).
17. **%REFS;** - Refer to common parameter entities for a complete description (see L.5.2).
18. **%SECUR;** - Refer to common parameter entities for a complete description (see L.5.3).

L.4.4.1.3 **Legend <*legend*>.** The element **<*legend*>** identifies a legend occurring as part of a figure. The element contains a list of callouts (**<*callout*>** see L.4.1.3.2) followed by callout definition (**<*def*>** see L.4.1.2.3.2).

a. DTD fragment for **<*legend*>**:

```
<!ELEMENT legend - - (callout, def)+ >
<!ATTLIST legend
```

```
id          ID       #IMPLIED
assocfig    IDREF    #IMPLIED>
```

b. Attributes for <***legend***> :

1. **ID** - Specifies the legend identifier.
2. **ASSOCFIG** - A reference to a figure(s) associated with the current element.

L.4.4.2 **Symbol <*symbol*>.** The element <***symbol***> is used for a graphic symbol not found in standard ISO character sets that is inserted as a graphic in text. A symbol should be stored either as vector (MIL-D-28000 or MIL-D-28003) or raster (MIL-R-28002) data.

a. DTD fragment for <***symbol***> :

```
<!ELEMENT symbol - o EMPTY >
<!ATTLIST symbol
            symbolcall    ENTITY           #IMPLIED
            symbolid      ID               #REQUIRED
            symrefid      IDREF            #IMPLIED
            symlocid      IDREF            #IMPLIED
            reprowid      NUTOKEN          #IMPLIED
            reprodep      NUTOKEN          #IMPLIED
            hscale        NUTOKEN          #IMPLIED
            vscale        NUTOKEN          #IMPLIED
            scalefit      %yesorno;        #IMPLIED
            hplace        (left | right |
                           center | none)  #IMPLIED
            vplace        (top | bottom |
                           middle | non)   #IMPLIED
            rotation      NUMBER           #IMPLIED
            %secur;>
```

b. Attributes for <***symbol***> :

1. **SYMBOLCALL** - The external entity containing the symbol's graphic file.
2. **SYMBOLID** - Specifies the symbol identifier.
3. **SYMREFID** - References a symbol identifier for the external entity name.
4. **SYMLOCID** - References a symbol identifier for the location attributes.
5. **REPROWID** - Specifies the repro area width.
6. **REPRODEP** - Specifies the repro area depth.
7. **HSCALE** - Specifies the horizontal scaling factor. The number 100 is unscaled graphic.
8. **VSCALE** - Specifies the vertical scaling factor. The number 100 is unscaled graphic.
9. **SCALEFIT** - Specifies the characteristic that allows the graphic to be scaled as needed to fit the size of the reproduction area, when attribute value is non-zero.
10. **HPLACE** - Specifies the horizontal placement in the available repro area. The position is flushed left, flushed right, centered or none.

11. **VPLACE** - Specifies the vertical placement in the available repro area. The position is top, bottom, centered or none.
12. **ROTATION** - Specifies the degree of rotation of the graphic.
13. **%SECUR;** - Refer to common parameter entities for a complete description (see L.5.3).

L.4.4.3 **Icon Set <*icon-set*>.** The element <***icon-set***> is the hazard icon-set to identify graphically the dangerous condition associated to the warning statement.

a. DTD fragment for <***icon-set***>:

```
<!ELEMENT icon-set - o EMPTY >
<!ATTLIST icon-set
            boardno     ENTITY       #REQUIRED>
```

b. Attributes for <***icon-set***>:

1. **BOARDNO** - Specifies the name of the entity containing the external icon file.

L.4.5 **Content Specified Elements.**

L.4.5.1 **CAGEC <*cageno*>.** The element <***cageno***> is the Commercial and Government Entity Code (CAGEC) and can be embedded within the text stream to further identify a piece of information within the data. The element contains inline text (***%text;*** see L.3.6) which allows the embedding of data elements. Generally, the narrative is entered using #PCDATA.

a. DTD fragment for <***cageno***>:

```
<!ELEMENT cageno - - (%text;)>
<!ATTLIST cageno
          %refs;
          %secur;>
```

b. Attributes for <***cageno***> :

1. **%REFS;** - Refer to common parameter entities for a complete description (see L.5.2).
2. **%SECUR;** - Refer to common parameter entities for a complete description (see L.5.3).

L.4.5.2 **Control/Indicator <*ctrlind*>.** The element <***ctrlind***> control or indicator can be embedded within the text stream to further identify the data. The element contains inline text (***%text;*** see L.3.6) which allows the embedding of data elements. Generally, the narrative is entered using #PCDATA.

a. DTD fragment for <***ctrlind***>:

```
<!ELEMENT ctrlind - - (%text;)>
<!ATTLIST ctrlind
          %navlink;
          %refs;
          %secur;>
```

b. Attributes for <***ctrlind***> :

1. **%NAVLINK;** - Refer to common parameter entities for a complete description (see L.5.8).
2. **%REFS;** - Refer to common parameter entities for a complete description (see L.5.2).
3. **%SECUR;** - Refer to common parameter entities for a complete description (see L.5.3).

L.4.5.3 **Control/Indicator Value <*ctrlind-val*>.** The element <***ctrlind-val***> is the reading on a control or indicator and can be embedded within the text stream to further identify the data. The element contains inline text (***%text;*** see L.3.6) which allows the embedding of data elements. Generally, the narrative is entered using #PCDATA.

a. DTD fragment for <***ctrlind-val***>:

```
<!ELEMENT ctrlind-val - - (%text;)>
<!ATTLIST ctrlind-val
            %refs;
            %secur;>
```

b. Attributes for <***ctrlind-val***>:

1. **%REFS;** - Refer to common parameter entities for a complete description (see L.5.2).
2. **%SECUR;** - Refer to common parameter entities for a complete description (see L.5.3).

L.4.5.4 **Drawing Name <*dwgname*>.** The element <***dwgname***> is used to identify the names of drawings that can be embedded within text stream to further identify the data. The element contains the inline text (<***text***> see L.3.6) after which the drawing name is entered or a navigational reference (<***navref***> (see L.4.7.10) to the drawing information.

a. DTD fragment for <***dwgname***> :

```
<!ELEMENT dwgname - o (text | navref)>
<!ATTLIST dwgname
            %refs;
            %secur;>
```

b. Attributes for <***dwgname***> :

1. **%REFS;** - Refer to common parameter entities for a complete description (see L.5.2).
2. **%SECUR;** - Refer to common parameter entities for a complete description (see L.5.3).

L.4.5.5 **Drawing Number <*dwgno*>.** The element <***dwgno***> is the drawing number and can be embedded within the text stream to further identify the data. The element contains inline text (***%text;*** see L.3.6) which allows the embedding of data elements. Generally, the narrative is entered using #PCDATA.

a. DTD fragment for <***dwgno***>:

```
<!ELEMENT dwgno - o (%text;)>
<!ATTLIST dwgno
            %navlink;
```

```
            %refs;
            %secur;>
```

b. Attributes for <***dwgno***> :

1. **%NAVLINK;** - Refer to common parameter entities for a complete description (see L.5.8).
2. **%REFS;** - Refer to common parameter entities for a complete description (see L.5.2).
3. **%SECUR;** - Refer to common parameter entities for a complete description (see L.5.3).

L.4.5.6 **Flight Safety Critical Part <*flghtsafe-part*>.** The element <***flghtsafe-part***> is used to identify a flight-safety-critical part, officially denoted in the Army Aviation Flight Safety Program that can be embedded in the text stream. The element contains the inline text (<***text***> see L.3.6) after which the flight-safety-critical part is entered followed by an optional navigational reference (<***navref***> see L.4.7.10).

a. DTD fragment for <***flghtsafe-part***> :

```
<!ELEMENT flghtsafe-part - - (text, navref?)>
<!ATTLIST flghtsafe-part
            %navlink;
            %refs;
            %secur;>
```

b. Attributes for <***flghtsafe-part***> :

1. **%NAVLINK;** - Refer to common parameter entities for a complete description (see L.5.8).
2. **%REFS;** - Refer to common parameter entities for a complete description (see L.5.2).
3. **%SECUR;** - Refer to common parameter entities for a complete description (see L.5.3).

L.4.5.7 **General or Introductory Information <*geninfo*>.** The element <***geninfo***> contains titled and subtitled paragraphs giving general or introductory information. The element is contained in various work package contexts; such as service upon receipt work package, or contained as part of procedural instructions; such as cleaning an aircraft prior to shipping. This element contains the section and subsection parameter entity (***%titldtext;*** see L.3.3).

a. DTD fragment for <***geninfo***> :

```
<!ELEMENT geninfo - o (%titldtext;)+ >
<!ATTLIST geninfo
            %navlink;
            %nodeloc;
            %refs;
            %secur;>
```

b. Attributes for <***geninfo***> :

1. **%NAVLINK;** - Refer to common parameter entities for a complete description (see L.5.8).
2. **%NODELOC;** - Refer to common parameter entities for a complete description (see L.5.9).

3. **%REFS;** - Refer to common parameter entities for a complete description (see L.5.2).
4. **%SECUR;** - Refer to common parameter entities for a complete description (see L.5.3).

L.4.5.8 **Introductory <*intro*>.** The element <***intro***> identifies an introductory section contained in various work packages, which often (but not always) has text that should be entered verbatim as boiler plate text from the governing specification (TMs is MIL-STD-40051).

a. DTD fragment for <***intro***> :

```
<!ELEMENT intro  - o (%titldtext;)+ >
<!ATTLIST intro
            %refs;
            %secur;>
```

b. Attributes for <***intro***> :

1. **%REFS;** - Refer to common parameter entities for a complete description (see L.5.2).
2. **%SECUR;** - Refer to common parameter entities for a complete description (see L.5.3).

L.4.5.9 **Lubricant <*lubricant*>.** The element <***lubricant***> identifies a lubricant within text, primarily within a lubrication work package. The element contains inline text (***%text;*** see L.3.6) which allows the embedding of data elements. Generally, the narrative is entered using #PCDATA.

a. DTD fragment for <***lubricant***> :

```
<!ELEMENT lubricant - - (%text;)>
<!ATTLIST lubricant
            %navlink;
            %refs;
            %secur;>
```

b. Attributes for <***lubricant***> :

1. **%NAVLINK;** - Refer to common parameter entities for a complete description (see L.5.8).
2. **%REFS;** - Refer to common parameter entities for a complete description (see L.5.2).
3. **%SECUR;** - Refer to common parameter entities for a complete description (see L.5.3).

L.4.5.10 **Model Number <*modelno*>.** The element <***modelno***> is used to mark any official model number of a piece of equipment embedded in the text stream, work package setup information, and on chapter title pages and front cover of the manual.

a. DTD fragment for <***modelno***> :

```
<!ELEMENT modelno - - (#PCDATA)>
<!ATTLIST modelno
            nsn         CDATA       #IMPLIED
            eic         CDATA       #IMPLIED
```

```
            %refs;
            %secur;>
```

b. Attributes for <***modelno***> :

1. **NSN** - Used to specify the NSN of the current model number, if applicable.
2. **EIC** - Used to specify the end item code of the current model number, if applicable.
3. **%REFS;** - Refer to common parameter entities for a complete description (see L.5.2).
4. **%SECUR;** - Refer to common parameter entities for a complete description (see L.5.3).

L.4.5.11 **Name** <***name***>**.** The element <***name***> is used to identify the official name of a component/ assembly. The element contains the inline text (<***text***> see L.3.6) after which the official name is entered or a navigational reference (<***navref***> see L.4.7.10).

a. DTD fragment for <***name***> :

```
<!ELEMENT name - - (text | navref)>
<!ATTLIST name
            applic      CDATA       #IMPLIED
            partno      CDATA       #IMPLIED
            nsn         CDATA       #IMPLIED
            %navlink;
            %refs;
            %secur;>
```

b. Attributes for <***name***> :

1. **APPLIC** - Specifies the equipment configurations to which the current name applies.
2. **PARTNO** - Specifies the part number, if any, of the part bearing the current name.
3. **NSN** - Specifies the national stock number, if any, of the part bearing the current name.
4. **%NAVLINK;** - Refer to common parameter entities for a complete description (see L.5.8).
5. **%REFS;** - Refer to common parameter entities for a complete description (see L.5.2).
6. **%SECUR;** - Refer to common parameter entities for a complete description (see L.5.3).

L.4.5.12 **National Stock Number (NSN)** <***nsn***>**.** The element <***nsn***> is the national stock number and can be embedded within text stream to further identify the data. In addition, a navigational reference (<***navref***> see L.4.7.10) may occur anywhere within this element.

a. DTD fragment for <***nsn***> :

```
<!ELEMENT nsn - - (#PCDATA) +(navref)>
<!ATTLIST nsn
            eic         CDATA       #IMPLIED
            %navlink;
            %refs;
            %secur;>
```

b. Attributes for <***nsn***> :

1. **EIC** - Used to specify the end item code of the current NSN, if applicable.
2. **%NAVLINK;** - Refer to common parameter entities for a complete description (see L.5.8).
3. **%REFS;** - Refer to common parameter entities for a complete description (see L.5.2).
4. **%SECUR;** - Refer to common parameter entities for a complete description (see L.5.3).

L.4.5.13 **Part Number <*partno*>.** The element <***partno***> is used to identify a part numbers and can be embedded within text stream to further identify the data. In addition, a navigational reference (<***navref***> see L.4.7.10) may occur anywhere within this element.

a. DTD fragment for <***partno***> :

```
<!ELEMENT partno - - (#PCDATA) +(navref)>
<!ATTLIST partno
            nsn         CDATA       #IMPLIED
            eic         CDATA       #IMPLIED
            %navlink;
            %refs;
            %secur;>
```

b. Attributes for <***partno***> :

1. **NSN** - Used to specify the national stock number of the current part number, if applicable.
2. **EIC** - Used to specify the end item code of the current part number, if applicable.
3. **%NAVLINK;** - Refer to common parameter entities for a complete description (see L.5.8).
4. **%REFS;** - Refer to common parameter entities for a complete description (see L.5.2).
5. **%SECUR;** - Refer to common parameter entities for a complete description (see L.5.3).

L.4.5.14 **Supply Catalog <*sc*>.** The element <***sc***> is used to identify a supply catalog number of a tool or tool kit that occurs in the text stream or as a setup item identifying number. The element contains inline text (***%text;*** see L.3.6) which allows the embedding of data elements. Generally, the narrative is entered using #PCDATA.

a. DTD fragment for <***sc***> :

```
<!ELEMENT sc - - (%text;)>
<!ATTLIST sc
            %refs;
            %secur;>
```

b. Attributes for <***sc***> :

1. **%REFS;** - Refer to common parameter entities for a complete description (see L.5.2).
2. **%SECUR;** - Refer to common parameter entities for a complete description (see L.5.3).

L.4.5.15 **Scope <*scope*>.** The element <***scope***> includes a brief statement of what is covered in the TM, information chapter, work package and/or procedure. This includes the type of manual, model numbers and equipment names, purpose of equipment, any special inclusions in the manual and any other pertinent information. The element includes paragraph(s) (<***para***> see L.4.1.5.3) and/or paragraph(s) with required alert notices (<***specpara***> see L.4.1.1.1).

a. DTD fragment for <***scope***>:

```
<!ELEMENT scope - - (para | specpara)+ >
<!ATTLIST scope
          %bodyatt;
          %secur;>
```

b. Attributes for <***scope***> :

- **%BODYATT;** - Refer to common parameter entities for a complete description (see L.5.1).
- **%SECUR;** - Refer to common parameter entities for a complete description (see L.5.3).

L.4.5.16 **Title Page <*titlepg*>.** The element <***titlepg***> is used for a title page preceding an information chapter in a technical equipment manual. The element contains at least one nomenclature/component name (<***name***> see L.4.5.11), with optional part number(s) (<***partno***> see L.4.5.13), equipment model number(s) (<***modelno***> see L.4.5.10), and/or NSN(s) (<***nsn***> see L.4.5.12).

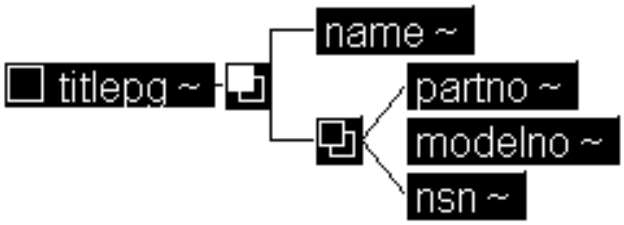

Figure 119 DTD Hierarchy for <titlepg>

a. DTD fragment for <***titlepg***>:

```
<!ELEMENT titlepg - - (name, (partno | modelno | nsn)*)+>
<!ATTLIST titlepg
            maintlvl   (depot | operator |
                        gensup | dirsup |
                        unitlvl | inter |
                        avum-avim | tmlvls)   #REQUIRED>
```

b. Attributes for <***titlepg***>:

1. **MAINTLVL** - Maintenance level.
   (a) “OPERATOR” - Applies to operator maintenance level.
   (b) “UNITLVL” - Applies to unit maintenance level.

(c) “DIRSUP” - Applies to direct support (DS) maintenance level.

(d) “GENSUP” - Applies to general support (GS) maintenance level.

(e) “INTER” - Applies to intermediate (DS/GS) maintenance level.

(f) “DEPOT” - Applies to depot maintenance level.

(g) “AVUM-AVIM” - Applies to aviation unit (AVUM) and intermediate (AVIM) maintenance level.

(h) “TMLVLS” - Applies to all maintenance levels.

L.4.5.17 **Torque Value or Limit <*torque*>.** The element <***torque***> is used to identify a torque value or limit embedded in the text or table entry. The element contains inline text (***%text;*** see L.3.6) which allows the embedding of data elements. Generally, the narrative is entered using #PCDATA.

a. DTD fragment for <***torque***> :

```
<!ELEMENT torque - - (%text;)>
<!ATTLIST torque
            %refs;
            %secur;>
```

b. Attributes for <***torque***> :

1. **%REFS;** - Refer to common parameter entities for a complete description (see L.5.2).
2. **%SECUR;** - Refer to common parameter entities for a complete description (see L.5.3).

L.4.5.18 **Voltage <*voltage*>.** The element <***voltage***> identifies a critical voltage measurement embedded in the text. The element contains inline text (***%text;*** see L.3.6) which allows the embedding of data elements. Generally, the narrative is entered using #PCDATA.

a. DTD fragment for <***voltage***> :

```
<!ELEMENT voltage - - (%text;)>
<!ATTLIST voltage
            %refs;
            %secur;>
```

b. Attributes for <***voltage***> :

1. **%REFS;** - Refer to common parameter entities for a complete description (see L.5.2).
2. **%SECUR;** - Refer to common parameter entities for a complete description (see L.5.3).

L.4.6 **Work Package Initial Setup.**

L.4.6.1 **Work Package Summary <*wpsum*>.** The element <***wpsum***> is the work package summary and contains a phrase or sentence briefly describing the contents of the work package, e.g., "Repair and replace the fuel filter." The text is entered by using either the inline text (<***text***> see L.3.6)) or paragraph (<***para***> see L.4.1.5.3)) depending on whether the text is to start a new line.

a. DTD fragment for <***wpsum***> :

```
<!ELEMENT wpsum - o (text | para)>
<!ATTLIST wpsum
            %navlink;
            %refs;
            %secur; >
```

b. Attributes for <***wpsum***> :

1. **%NAVLINK;** - Refer to common parameter entities for a complete description (see L.5.8).
2. **%REFS;** - Refer to common parameter entities for a complete description (see L.5.2).
3. **%SECUR;** - Refer to common parameter entities for a complete description (see L.5.3).

L.4.6.2 **Work Package Setup Information <*wpinfo*>.** The element <***wpinfo***> initial setup information lists all of the information required by the technician so the tools, test equipment, references, parts, and other items needed to complete the tasks can be obtained. The element contains a maintenance level (<***maintlvl***>), and any applicable setup categories that applies to the work package which are applicable configuration (<***appconfig***>), test equipment list (<***testeqp***>), tools list (<***tools***>), expendable materials and parts required list, (<***mtrlpart***>), personnel requirements (<***persnreq***>), drawing requirements (<***dwgreq***>), document reference materials (<***refs***>), troubleshooting references (<***trblrefs***>), equipment condition (<***eqpconds***>) and/or special environment (<***specenv***>). Each setup category may only be referenced once.

a. DTD fragment for <***wpinfo***> :

```
<!ELEMENT wpinfo - - (maintlvl, appconfig?, (testeqp | tools | mtrlpart |
                      persnreq | dwgreq)*, (ref | trblrefs)*, (eqpconds |
                      specenv)*)>
<!ATTLIST wpinfo
          %navlink;
          %nodeloc;
          %refs;
          %secur;>
```

b. Attributes for <***wpinfo***> :

1. **%NAVLINK;** - Refer to common parameter entities for a complete description (see L.5.8).
2. **%NODELOC;** - Refer to common parameter entities for a complete description (see L.5.9).
3. **%REFS;** - Refer to common parameter entities for a complete description (see L.5.2).
4. **%SECUR;** - Refer to common parameter entities for a complete description (see L.5.3).

L.4.6.2.1 **Maintenance Level <*maintlvl*>.** The element <***maintlvl***> is the work package maintenance level and is entered using the attribute "LEVEL". The element is EMPTY and all pertinent information is entered through its attributes.

a. DTD fragment for <***maintlvl***>:

```
<!ELEMENT maintlvl - o EMPTY>
<!ATTLIST maintlvl
```

```
level    (depot | operator |
          gensup | dirsup |
          unitlvl | inter |
          avum-avim | tmlvls)     #REQUIRED>
```

b. Attributes for <***maintlvl***>:

1. **LEVEL** - Specifies the work package maintenance level.
   (a) "OPERATOR" - Applies to operator maintenance level.
   (b) "UNITLVL" - Applies to unit maintenance level.
   (c) "DIRSUP" - Applies to direct support (DS) maintenance level.
   (d) "GENSUP" - Applies to general support (GS) maintenance level.
   (e) "INTER" - Applies to intermediate (DS/GS) maintenance level.
   (f) "DEPOT" - Applies to depot maintenance level.
   (g) "AVUM-AVIM" - Applies to aviation unit (AVUM) and intermediate (AVIM) maintenance level.
   (h) "TMLVLS" - Applies to all maintenance levels.

L.4.6.2.2 **Applicable Configuration** <***appconfig***>**.** The element <***appconfig***> defines the applicable configurations that lists the configurations covered by the work package. The element contains a navigational reference <***navref***> or at least one applicable configuration item (<***setup-item***>).

a. DTD fragment for <***appconfig***>:

```
<!ELEMENT appconfig - o (navref | (setup-item)+)>
<!ATTLIST appconfig
            %navlink;
            %refs;
            %secur;>
```

b. Attributes for <***appconfig***>:

1. **%NAVLINK;** - Refer to common parameter entities for a complete description (see L.5.8).
2. **%REFS;** - Refer to common parameter entities for a complete description (see L.5.2).
3. **%SECUR;** - Refer to common parameter entities for a complete description (see L.5.3).

L.4.6.2.2.1 **Setup Item** <***setup-item***>**.** The element <***setup-item***> is a generic item in a specific initial setup category list. Information is entered identifying the equipment/tool name (<***name***> see L.4.5.11) name, the required personnel (MOS <***nameid***> and MOS title <***name***> see L.4.5.11) or conditional statement (<***condition***>), followed by either an optional identification number (<***identno***>) or an optional quantity (<***qty***>) followed by an optional reference to the item's description (<***itemref***>). Anywhere in the element an index reference (<***indxref***> see L.4.1.3.4) or footnote reference (<***ftnref***> see L.4.1.4.2) may occur.

a. DTD fragment for <***setup-item***> :

```
<!ELEMENT setup-item - o ((name | (nameid, name?) | condition), (identno |
```

```
                          qty)?, itemref?)  +(indxref | ftnref)>
<!ATTLIST setup-item
            %navlink
            %refs;
            %secur;>
```

b. Attributes for <***setup-item***> :

1. **%NAVLINK;** - Refer to common parameter entities for a complete description (see L.5.8).
2. **%REFS;** - Refer to common parameter entities for a complete description (see L.5.2).
3. **%SECUR;** - Refer to common parameter entities for a complete description (see L.5.3).

L.4.6.2.2.1.1 **Military Occupational Specialty (MOS) Name Identification <*nameid*>.** The element <***nameid***> is the identifying number of the Military Occupational Specialty (MOS) required to perform the procedures in the work package.

a. DTD fragment for <***nameid***>:

```
<!ELEMENT nameid - o (%text;)>
<!ATTLIST nameid
            %refs;
            %secur;>
```

b. Attributes for <***nameid***>:

1. **%REFS;** - Refer to common parameter entities for a complete description (see L.5.2).
2. **%SECUR;** - Refer to common parameter entities for a complete description (see L.5.3).

L.4.6.2.2.1.2 **Condition Statement <*condition*>.** The element <***condition***> is used to describe either prerequisite, special environmental or equipment condition statement(s) prior to the work package procedure(s). The element contains narrative text (<***text***> see L.3.6) followed by an optional navigational reference (<***navref***> see L.4.7.10).

a. DTD fragment for <***condition***>:

```
<!ELEMENT condition - o (text, navref?)>
<!ATTLIST condition
            %navlink;
            %faultstate;
            %refs;
            %secur;>
```

b. Attributes for <***condition***>:

1. **%NAVLINK;** - Refer to common parameter entities for a complete description (see L.5.8).
2. **%FAULTSTATE;** - Refer to common parameter entities for a complete description (see L.4.7.6).

3. **%REFS;** - Refer to common parameter entities for a complete description (see L.5.2).
4. **%SECUR;** - Refer to common parameter entities for a complete description (see L.5.3).

L.4.6.2.2.1.3 **Identifying Number <*identno*>.** The element <***identno***> contains some form of identifying number for an item within the work package setup information. The element contains one or more of the following identifying qualifiers part number (<***partno***> see L.4.5.13), model number (<***modelno***> see L.4.5.10), TM number (<***tmno***> see K.3.1.1.1.1.1.2), NSN (<***nsn***> see L.4.5.12), supply category (<***sc***> see L.4.5.14) and/ or CAGEC (<***cageno***> see L.4.5.1).Anywhere in the element a navigational reference (<***navref***> see L.4.7.10) may be included.

a.

```
<!ELEMENT identno - o (partno* | modelno* | tmno | nsn* | sc* | cageno)+
                      +(navref)>
<!ATTLIST identno
            %refs;
            %secur;>
```

b.

1. **%REFS;** - Refer to common parameter entities for a complete description (see L.5.2).
2. **%SECUR;** - Refer to common parameter entities for a complete description (see L.5.3).

L.4.6.2.2.1.4 **Quantity <*qty*>.** The element <***qty***> indicates the recommended quantity.

a. The DTD fragment <***qty***>:

```
<!ELEMENT qty - o (%text;)>
<!ATTLIST qty
            %refs;
            %secur;>
```

b. The attributes for <***qty***>:

1. **%REFS;** - Refer to common parameter entities for a complete description (see L.5.2).
2. **%SECUR;** - Refer to common parameter entities for a complete description (see L.5.3).

L.4.6.2.2.1.5 **Setup Item Reference Information <*itemref*>.** The element <***itemref***> contains a reference to the setup item information. The element contains at least one cross reference external to the document (<***extref***> see L.4.1.3.3), cross reference within the document (<***xref***> see L.4.1.3.8), and/or specific reference to a standard table entry in a supporting information chapter (<***simref***> see L.4.1.3.6).

a. DTD fragment for <***itemref***>:

```
<!ELEMENT itemref - o (xref | extref | simref)+>
```

L.4.6.2.3 **Test Equipment List <*testeqp*>.** The element <***testeqp***> is the list of test equipments required to perform the procedures in the work package. The element contains either a navigational reference (<***navref***> see L.4.7.10) or at least one test equipment item (<***setup-item***> see L.4.6.2.2.1).

a. DTD fragment for <***testeqp***>:

```
<!ELEMENT testeqp - o (navref | (setup-item)+)>
<!ATTLIST testeqp
            %navlink;
            %refs;
            %secur;>
```

b. Attributes for <***testeqp***>:

1. **%NAVLINK;** - Refer to common parameter entities for a complete description (see L.5.8).
2. **%REFS;** - Refer to common parameter entities for a complete description (see L.5.2).
3. **%SECUR;** - Refer to common parameter entities for a complete description (see L.5.3).

L.4.6.2.4 **Tools <*tools*>.** The element <***tools***> is the list of tools required to perform the procedures in the work package. The element contains a navigational reference (<***navref***> see L.4.7.10) or at least one tool item (<***setup-item***> see L.4.6.2.2.1).

a. DTD fragment for <***tools***>:

```
<!ELEMENT tools - o (navref | (setup-item)+)>
<!ATTLIST tools
            %navlink;
            %refs;
            %secur;>
```

b. Attributes for <***tools***>:

1. **%NAVLINK;** - Refer to common parameter entities for a complete description (see L.5.8).
2. **%REFS;** - Refer to common parameter entities for a complete description (see L.5.2).
3. **%SECUR;** - Refer to common parameter entities for a complete description (see L.5.3).

L.4.6.2.5 **Expendable Materials and Parts Required <*mtrlpart*>.** The element <***mtrlpart***> is the list of expendable materials and parts required to perform the procedures in the work package. It consists of a navigational reference (<***navref***> see L.4.7.10) or at least one expendable material and part item (<***setup-item***> see L.4.6.2.2.1).

a. DTD fragment for <***mtrlpart***>:

```
<!ELEMENT mtrlpart - o (navref | (setup-item)+)>
<!ATTLIST mtrlpart
            %navlink;
            %refs;
            %secur;>
```

b. Attributes for <***mtrlpart***>:

1. **%NAVLINK;** - Refer to common parameter entities for a complete description (see L.5.8).
2. **%REFS;** - Refer to common parameter entities for a complete description (see L.5.2).
3. **%SECUR;** - Refer to common parameter entities for a complete description (see L.5.3).

L.4.6.2.6 **Personnel Required <*persnreq*>.** The personnel required element <***persnreq***> lists the personnel required to perform the procedures in the current work package. The element contains a navigational reference <***navref***> or one or more setup items <***setup-item***>.

a. DTD fragment for <***persnreq***>:

```
<!ELEMENT persnreq - o (navref | (setup-item)+)>
<!ATTLIST persnreq
            %navlink;
            %refs;
            %secur;>
```

b. Attributes for <***persnreq***>:

1. **%NAVLINK;** - Refer to common parameter entities for a complete description (see L.5.8).
2. **%REFS;** - Refer to common parameter entities for a complete description (see L.5.2).
3. **%SECUR;** - Refer to common parameter entities for a complete description (see L.5.3).

L.4.6.2.7 **Drawing Requirements <*dwgreq*>.** The element <***dwgreq***> lists the drawings required to perform the procedures in the work package. The element contains either a navigational reference <***navref***> or at least one drawing number <***dwgno***> which may be preceded by a drawing name <***dwgname***>.

a. DTD fragment for <***dwgreq***>:

```
<!ELEMENT dwgreq - o (navref | (dwgname?, dwgno)+)>
<!ATTLIST dwgreq
            %navlink;
            %refs;
            %secur;>
```

b. Attributes for <***dwgreq***>:

1. **%NAVLINK;** - Refer to common parameter entities for a complete description (see L.5.8).
2. **%REFS;** - Refer to common parameter entities for a complete description (see L.5.2).
3. **%SECUR;** - Refer to common parameter entities for a complete description (see L.5.3).

L.4.6.2.8 **References Material <*ref*>.** The element <***ref***> is all reference information other than references to troubleshooting work packages. The reference material may include other TMs and publications, chapters, or work packages. The element contains at least one cross reference, internal to the document instance (<***xref***> see L.4.1.3.8), cross reference, external to the document instance (<***extref***> see L.4.1.3.3), or navigational reference (<***navref***> see L.4.7.10).

a. DTD fragment for <***ref***>:

```
<!ELEMENT ref - o (xref | extref | navref)+>
```

```
<!ATTLIST ref
            %navlink;
            %refs;
            %secur;>
```

b. Attributes for <***ref***>:

1. **%NAVLINK;** - Refer to common parameter entities for a complete description (see L.5.8).
2. **%REFS;** - Refer to common parameter entities for a complete description (see L.5.2).
3. **%SECUR;** - Refer to common parameter entities for a complete description (see L.5.3).

L.4.6.2.9 **Troubleshooting References <*trblrefs*>.** The element <***trblrefs***> is references to troubleshooting work packages that might be needed if a problem is encountered during a maintenance procedure. The element contains a navigational reference (<***navref***> see L.4.7.10) or at least one troubleshooting reference item (<***setup-item***> see L.4.6.2.2.1).

a. DTD fragment for <***trblrefs***>:

```
<!ELEMENT trblrefs - o (navref | (setup-item)+)>
<!ATTLIST trblrefs
            wpno  IDREF  #REQUIRED
            %navlink;
            %bodyatt;
            %secur;>
```

b. Attributes for <***trblrefs***>:

1. **WPNO** - Identifies the referenced troubleshooting work package, using the unique work package number.
2. **%NAVLINK;** - Refer to common parameter entities for a complete description (see L.5.8).
3. **%BODYATT;** - Refer to common parameter entities for a complete description (see L.5.1).
4. **%SECUR;** - Refer to common parameter entities for a complete description (see L.5.3).

L.4.6.2.10 **Equipment Condition <*eqpconds*>.** The element <***eqpconds***> is a list of equipment condition prior to beginning the tasks covered by the work package. The element contains either a navigational reference (<***navref***> see L.4.7.10) or at least one equipment condition item (<***setup-item***> see L.4.6.2.2.1).

a. DTD fragment for <***eqpconds***>:

```
<!ELEMENT eqpconds - o (navref | (setup-item)+)>
<!ATTLIST eqpconds
            %navlink;
            %refs;
            %secur;>
```

b. Attributes for <***eqpconds***>:

1. **%NAVLINK;** - Refer to common parameter entities for a complete description (see L.5.8).
2. **%REFS;** - Refer to common parameter entities for a complete description (see L.5.2).
3. **%SECUR;** - Refer to common parameter entities for a complete description (see L.5.3).

L.4.6.2.11 **Special Environment Condition <*specenv*>.** The element <***specenv***> is special environmental condition, such as ventilation, lighting, or temperature, required to perform the procedures contained in the work package. The element contains either a navigational reference (<***navref***> see L.4.7.10) or at least one special environmental condition item (<***setup-item***> see L.4.6.2.2.1).

a. DTD fragment for <***specenv***>:

```
<!ELEMENT specenv - o (navref | (setup-item)+)>
<!ATTLIST specenv
            %navlink;
            %refs;
            %secur;>
```

b. Attributes for <***specenv***>:

1. **%NAVLINK;** - Refer to common parameter entities for a complete description (see L.5.8).
2. **%REFS;** - Refer to common parameter entities for a complete description (see L.5.2).
3. **%SECUR;** - Refer to common parameter entities for a complete description (see L.5.3).

L.4.7 **IETM Elements.**

L.4.7.1 **Evaluation Expression <*expression*>.** The element <***expression***> is used to present a condition, state evaluation, or other logical processing that qualifies or accompanies the traversal of a navigation reference link. It may qualify the traversal, update a state table, alter the content of a property in or out of the state table, or supply or modify a value. An expression may contain a operation (binary or unary), a property, a value or any combination. Expressions may be nested so that the value operated upon by a operator is derived from another such operation. The element contains either an operation, property (<***property***>) or value (***%value;*** see L.3.13). The operation contains an operand/operation (<***expression***>) followed by either an unary operator (***%unop;*** see L.3.11) or a binary operator (***%binop;*** see L.3.12) followed by an operand/ operation (<***expression***>), after the operator is performed an optional prompt dialog box (<***prompt***> see L.4.7.1.3) follows.

a. DTD fragment for <***expression***>:

```
<!ELEMENT expression - - ((expression, ((%unop;) | ((%binop;), expression)),
                          prompt?) | property | %value;)>
<!ATTLIST expression
             %navlink;
             %refs; >
```

b. Attributes for <***expression***>:

1. **%NAVLINK;** - Refer to common parameter entities for a complete description (see L.5.8).
2. **%REFS;** - Refer to common parameter entities for a complete description (see L.5.2).

L.4.7.1.1 **Unary Operator Elements.** The elements defined is a operand being acted on by the operator (***%unop;*** see L.3.11). The content model for all the elements are EMPTY and will not display each DTD fragment. Using the element name, an action is performed against a value or property. Refer to MIL-PRF-87269 for details on the purpose and use.

L.4.7.1.1.1 **Pass <*pass*>.** The element **<*pass*>** returns a pass value of a test component.

L.4.7.1.1.2 **Fail <*fail*>.** The element **<*fail*>** returns a fail value of a test component.

L.4.7.1.1.3 **Undefined <*undef*>.** The element **<*undef*>** returns a undefined value of a test component.

L.4.7.1.1.4 **True <*true*>.** The element **<*true*>** returns a true evaluation test of addressable data, such as an expression or assertion.

L.4.7.1.1.5 **Not True <*nottrue*>.** The element **<*nottrue*>** returns a not-true evaluation test of addressable data, such as an expression or assertion.

L.4.7.1.1.6 **Empty Test <*empty*>.** The element **<*empty*>** evaluates whether a set, sequence or string is empty. True if value is non-zero and false if ’0’.

L.4.7.1.1.7 **Not <*not*>.** The element **<*not*>** identifies a logical NOT function.

L.4.7.1.1.8 **Maximum <*max*>.** The element **<*max*>** indicates the allowable maximum value.

L.4.7.1.1.9 **Minimum <*min*>.** The element **<*min*>** indicates the allowable minimum value.

L.4.7.1.1.10 **Index Head <*head*>.** The element **<*head*>** is a command to return the first value or head of a sequence.

L.4.7.1.1.11 **Index Tail <*tail*>.** The element **<*tail*>** is a command to return the last value or tail of a sequence.

L.4.7.1.1.12 **Index <*index*>.** The element **<*index*>** is a command to return the value located by its position (**<*index-val*>** see L.4.7.1.2.17.1) within a sequence.

L.4.7.1.1.13 **Size <*size*>.** The element **<*size*>** returns the number of members of a set or sequence, or length of a string.

L.4.7.1.1.14 **Negative <*neg*>.** The element **<*neg*>** returns the negative value of a number.

L.4.7.1.1.15 **Integer Conversion <*trunc*>.** The element **<*trunc*>** converts a number truncated to an integer.

L.4.7.1.1.16 **Real Number Conversion <*float*>.** The element **<*float*>** converts a number to a real number value.

L.4.7.1.2 **Binary Operator Elements.** The elements defined are two operands being acted on by a operator (***%binop;*** see L.3.12). The content model for the majority of the elements are EMPTY and will not display each DTD fragment. The elements with non EMPTY content model will have the DTD fragment shown. Using the element name, an action is performed against the values or properties. Refer to MIL-PRF-87269 for details on the purpose and use.

L.4.7.1.2.1 **Equal <*eq*>.** The element **<*eq*>** identifies a logical expression relational operator “=” (equal to).

L.4.7.1.2.2 **Not Equal <*ne*>.** The element **<*ne*>** identifies a logical expression relational operator “≠” (not equal to).

L.4.7.1.2.3 **Less Than <*lt*>.** The element **<*lt*>** identifies a logical expression relational operator “<” (less than).

L.4.7.1.2.4 **Less Than or Equal to <*le*>.** The element <***le***> identifies a logical expression relational operator "≤" (less than or equal to).

L.4.7.1.2.5 **Greater Than <*gt*>.** The element <***gt***> identifies a logical expression relational operator ">" (greater than).

L.4.7.1.2.6 **Greater Than or Equal to <*ge*>.** The element <***ge***> identifies a logical expression relational operator "≥" (greater than or equal to).

L.4.7.1.2.7 **Logical AND <*and*>.** The element <***and***> identifies a logical AND function.

L.4.7.1.2.8 **Logical Inclusive OR <*or*>.** The element <***or***> identifies a logical inclusive OR function.

L.4.7.1.2.9 **Logical Exclusive OR <*xor*>.** The element <***xor***> identifies a logical exclusive OR function.

L.4.7.1.2.10 **Addition <*plus*>.** The element <***plus***> identifies a numeric expression operator "+" (plus).

L.4.7.1.2.11 **Subtraction <*minus*>.** The element <***minus***> identifies a numeric expression operator "–" (minus).

L.4.7.1.2.12 **Multiplication <*mult*>.** The element <***mult***> identifies a numeric expression operator "*" (times).

L.4.7.1.2.13 **Division <*div*>.** The element <***div***> identifies a numeric expression operator "/" (divided by).

L.4.7.1.2.14 **Integer Division <*idivide*>.** The element <***idivide***> identifies integer division.

L.4.7.1.2.15 **Modulus <*mod*>.** The element <***mod***> returns the remainder value of an integer division operation.

L.4.7.1.2.16 **Exponentiation <*exponent*>.** The element <***exponent***> a numeric expression operator to raise the first number to the power of the second number.

L.4.7.1.2.17 **Add <*add*>.** The element <***add***> contains a command to add a value to a set or sequence; the element must contain an <***index-val***> (sequence position) to operate on a <***sequence***>. The same operation for <***sequence***> can operate on a string.

a. DTD fragment for <***add***>:

```
<!ELEMENT add  - o (index-val)? >
```

L.4.7.1.2.17.1 **Indexing Value <*index-val*>.** The element <***index-val***> is the index position pointer in the set, sequence or character string.

a. DTD fragment for <***index-val***>:

```
<!ELEMENT index-val - - (#PCDATA) >
```

L.4.7.1.2.18 **Remove <*remv*>.** The element <***remv***> contains a command to remove a value, contained in a <***value***> element or located by an <***index-val***> (see L.4.7.1.2.17.1)element applied to a sequence, from a set or sequence. Can also be used to remove a character from a string, with <***index-val***> indicating the character position within the string.

a. DTD fragment for <***remv***>:

```
<!ELEMENT remv - o (index-val, index-val?)? >
```

L.4.7.1.2.19 **Append <*append*>.** The element <***append***> identifies a command to append a value or property to a sequence or character string.

L.4.7.1.2.20 **Subsequence <*subsequence*>.** The element <***subsequence***> indicates a value is a sequence of values in a certain order.

L.4.7.1.2.21 **Union <*union*>.** The element <***union***> identifies the union of two sets.

L.4.7.1.2.22 **Intersection <*intersect*>.** The element <***intersect***> identifies the intersection of two sets.

L.4.7.1.2.23 **Set Difference <*set-diff*>.** The element <***set-diff***> identifies a set containing the difference between two sets.

L.4.7.1.2.24 **Member <*member*>.** The element <***member***> evaluates whether a value is a member of a set or sequence.

L.4.7.1.2.25 **Subset <*subset*>.** The element <***subset***> evaluates whether one set is a subset of another.

L.4.7.1.2.26 **Disjoint <*disjoint*>.** The element <***disjoint***> evaluates whether the intersection of two sets are empty.

L.4.7.1.2.27 **Store <*store*>.** The element <***store***> is a binary command to store X as Y (X is a value or property containing a value, Y is a property). Used to affect the state table upon a link traversal.

L.4.7.1.3 **Dialog Box Prompt <*prompt*>.** The element <***prompt***> holds the text of user prompts and also encloses user input in response to the prompt. A prompt may be contained in a navigation reference (<***navref***> see L.4.7.10) and also in an expression (<***expression***> see L.4.7.1) or assertion (<***assertion***> see L.4.7.2) element within the navigational reference. The element contains either a paragraph (<***para***> see L.4.1.5.3) or an unorder list (<***randlist***> see L.4.1.2.2) followed by an optional input to the prompt (<***input***> see F.10.3.10).

a. DTD fragment for <***prompt***>:

```
<!ELEMENT prompt - - ((para | randlist), input?)>
```

L.4.7.1.4 **Property <*property*>.** The element <***property***> contains a name to which values can be attached in order to track the current state of

a. The system or subsystem/assembly/component under test
b. Procedural actions
c. Current conditions and similar troubleshooting concepts.

Values can be attached to a property element through the property element's attributes or through an element in ***%value;*** used in an expression or assertion. Properties are not evaluable per se, only values are evaluable. Property values may be any of the value types listed in the ***%value;*** element entity, including boolean (which allows an existence test). Values and properties may be stored in a state table or tables by an IETM application.

a. DTD fragment for <***property***>:

```
<!ELEMENT property - - (#PCDATA) >
<!ATTLIST property
```

```
%navlink;
id          ID         #REQUIRED
valueloc    NAMES      #IMPLIED
valuetype   (%value;)  #IMPLIED
inputvalue  IDREF      #IMPLIED
value       CDATA      #IMPLIED>
```

b. Attributes for <***property***>:

1. **%NAVLINK;** - Refer to common parameter entities for a complete description (see L.5.8).
2. **ID** - Specifies the unique identifier of the current property element instance.
3. **VALUELOC** - Specifies the location (usually other properties) which supplies the value of the current property.
4. **VALUETYPE** - Specifies the form of the value in any value-related attribute. See L.3.13 for a description of the attribute values in <sgmlentity>value</sgmlentity>.
5. **INPUTVALUE** - References the identifier of an input element containing a value to be attached to the current property.
6. **VALUE** - Supplies an alphanumeric or numeric value if attribute "VALUETYPE" = "VALUE."

L.4.7.1.5 **Value Data Type Elements.** The elements defined are the data types available for evaluating operations. The elements <***boolean***>, <***float***>, <***integer***>, <***real***>, and <***string***> have the same content model of parsable character data and the DTD fragment will not be shown.

L.4.7.1.5.1 **Boolean <*boolean*>.** The element <***boolean***> indicates the value is a boolean (true or false).

L.4.7.1.5.2 **Floating Point Number <*float*>.** The element <***float***> indicates the value is a floating point number.

L.4.7.1.5.3 **Integer <*integer*>.** The element <***integer***> indicates the value is an integer.

L.4.7.1.5.4 **Real Number <*real*>.** The element <***real***> indicates the value is a real number.

L.4.7.1.5.5 **Character String <*string*>.** The element <***string***> indicates the value is a character string.

L.4.7.1.5.6 **NIL <*nil*>.** The element <***nil***> contains a value type of "NIL" or undefined. The content model is EMPTY and presentation media uses the element name for action to be performed.

L.4.7.1.5.7 **Prompt Input <*input*>.** The element <***input***> (see F.10.3.10) is the inputted information from a prompt.

L.4.7.1.5.8 **Test Outcome <*outcome*>.** The element <***outcome***> (see F.10.4) is the results from a test procedure.

L.4.7.1.5.9 **Set <*set*>.** The element <***set***> contains value in an unordered set of values.

a. DTD fragment for <***set***>:

```
<!ELEMENT (set |
          sequence) - - (%value;)>
```

L.4.7.1.5.10 **Sequence <*sequence*>.** The element <***sequence***> contains a value in a sequence of values in a certain order.

a. DTD fragment for <***sequence***>:

```
<!ELEMENT (set |
          sequence) - - (%value;)>
```

L.4.7.2 **Assertion** <***assertion***>**.** The element <***assertion***> states a condition, value, property, or similar state that can be evaluated as true or false. In most circumstances, an assertion must be true in order to traverse a navigation reference (<***navref***> see L.4.7.10). The element contains either a property value (<***property***> see L.4.7.1.4) or a value data type (***%value;*** see L.3.13) followed by evaluated expression (<***expression***> see L.4.7.1) followed by an optional dialog box prompt for next action (<***prompt***> see L.4.7.1.3).

a. DTD fragment for <***assertion***>:

```
<!ELEMENT assertion - - ((property | %value;), expression, prompt?)>
<!ATTLIST assertion
          %navlink;
          %refs;>
```

b. Attributes for <***assertion***>:

1. **%NAVLINK;** - Refer to common parameter entities for a complete description (see L.5.8).
2. **%REFS;** - Refer to common parameter entities for a complete description (see L.5.2).

L.4.7.3 **Alternate Paths** <***alts***>**.** The element <***alts***> is alternate path(s) for link traversal (<***navref***> see L.4.7.10) in an electronic environment. It contains at least one navigational reference qualified by an expression (<***expression***> see L.4.7.1) followed by an an optional dialog box prompt for next action (<***prompt***> see L.4.7.1.3). The paper manual and ETM equivalent of <***alts***> is <***test-alts***> (see L.4.7.7).

a. DTD fragment for <***alts***>:

```
<!ELEMENT alts - - ((expression, navref), prompt?)+>
<!ATTLIST alts
          %navlink;
          %refs;>
```

b. Attributes for <***alts***>:

1. **%NAVLINK;** - Refer to common parameter entities for a complete description (see L.5.8).
2. **%REFS;** - Refer to common parameter entities for a complete description (see L.5.2).

L.4.7.4 **Process Call and Return** <***process-call***>**.** The element <***process-call***> identifies a location in the document where the user must run a software program or expect a program to execute automatically in an IETM. The element contains a software program call to process (<***process***>) and a return location after finished processing (<***process-return***>).

a. DTD fragment for <***process-call***>:

```
<!ELEMENT process-call - - (process, process-return) >
<!ATTLIST process-call
          id         ID      #REQUIRED
```

```
processid  IDREF   #REQUIRED
prompt     CDATA   #IMPLIED
%navlink;
%nodeloc;
%faultstate;
%secur;>
```

b. Attributes for <***process-call***>:

1. **ID** - Specifies the unique identifier of the process call instance.
2. **PROCESSID** - Reference to the process identifier.
3. **PROMPT** - Contains the content of a prompt associated with starting an executable process. The prompt may capture data for use by the program.
4. **%NAVLINK;** - Refer to common parameter entities for a complete description (see L.5.8).
5. **%NODELOC;** - Refer to common parameter entities for a complete description (see L.5.9).
6. **%FAULTSTATE;** - Refer to common parameter entities for a complete description (see L.4.7.6).
7. **%SECUR;** - Refer to common parameter entities for a complete description (see L.5.3).

L.4.7.4.1 **Software Program Process <*process*>.** The element <***process***> contains identification of a software program and parameters necessary to execute the process through an external procedure. The element is EMPTY and all pertinent information is entered through its attributes.

a. DTD fragment for <***process***>:

```
<!ELEMENT process - o EMPTY >
<!ATTLIST process
          process   ENTITY  #REQUIRED
          id        ID      #REQUIRED>
```

b. Attributes for <***process***>:

1. **PROCESS** - The entity, referenced by the attribute, will probably contain a script, batch file, or application-specific mechanism for causing automatic execution of the program. The execution mechanism should include a return to the appropriate pointer to next action to perform (<***process-return***>).
2. **ID** - Specifies the unique identifier of the process call instance.

L.4.7.4.2 The element <***process-return***> contains a navigational reference in the document that is returned to after the program execution. The element contains a navigation reference (<***navref***> see L.4.7.10) that can point to a location qualified by an expression (<***expression***> see L.4.7.1) or assertion (<***assertion***> see L.4.7.2) or to an alternate qualified locations (<***alts***> see L.4.7.3). The <***expression***> can be used to operate on a value or values returned by the program execution.

a. DTD fragment for <***process-return***>:

```
<!ELEMENT process-return - o (navref) >
<!ATTLIST process-return
```

```
id          ID      #REQUIRED
processid   IDREF   #REQUIRED
%nodeloc;
%faultstate;>
```

b. Attributes for <***process-return***>:

1. **ID** - Specifies the unique identifier of the process call instance.
2. **PROCESSID** - Reference to the process identifier.
3. **%NODELOC;** - Refer to common parameter entities for a complete description (see L.5.9).
4. **%FAULTSTATE;** - Refer to common parameter entities for a complete description (see L.4.7.6).

L.4.7.5 **Valued Passed During Link Traversal <*valuepass*>.** The element <***valuepass***> contains a value to be passed during a link traversal (<***navref***> see L.4.7.10). The element contains at least one property value (<***property***> see L.4.7.1.4), as affected by any expression or assertion in the navigational reference (<***navref***>), is passed to the value locations (usually other properties) given in the value.

a. DTD fragment for <***valuepass***>:

```
<!ELEMENT valuepass - o (property+) >
```

L.4.7.6 **Current Fault State <*faultstate*>.** The element <***faultstate***> contains two elements that track suspected and cleared faults through their attributes. The element is contained in a navigation reference (<***navref***> see L.4.7.10) to pass the resulting fault state to the link target.

a. DTD fragment for <***faultstate***>:

```
<!ELEMENT faultstate - o (suspect, cleared) >
```

L.4.7.6.1 **Suspect Fault List <*suspect*>.** The element <***suspect***> contains fault states that remain suspect when the parent (<***navref***> see L.4.7.10) link is traversed. The element is EMPTY and all pertinent information is entered through its attributes.

a. DTD fragment for <***suspect***>:

```
<!ELEMENT suspect - o EMPTY >
<!ATTLIST suspect
          %faultstate;
          parent       %yesorno;    #IMPLIED
          child        %yesorno;    #IMPLIED
          probability  NUMBER       #IMPLIED
          cost         NUTOKEN      #IMPLIED>
```

b. Attributes for <***suspect***>:

1. **%FAULTSTATE;** - Refer to common parameter entities for a complete description (see L.4.7.6).
2. **PARENT** - Specifies whether or not the suspect faults will cause an apparent fault in their immediate parent's assembly/component of an assembly/component/system.

3. **CHILD** - Specifies whether or not any of the suspect faults will cause an apparent fault in the child components of an assembly/ component/system.
4. **PROBABILITY** - Specifies the probability that correcting the suspect faults will return the equipment to ready status.
5. **COST** - The cost in time of pursuing the current suspect faults.

L.4.7.6.2 **Cleared Fault <*cleared*>.** The element <***cleared***> contains fault states to be cleared (exonerated) when the parent (<***navref***> see L.4.7.10) link is traversed. The element is EMPTY and all pertinent information is entered through its attributes.

a. DTD fragment for <***cleared***>:

```
<!ELEMENT cleared - o EMPTY >
<!ATTLIST cleared
          %faultstate;>
```

b. Attributes for <***cleared***>:

1. **%FAULTSTATE;** - Refer to common parameter entities for a complete description (see L.4.7.6).

L.4.7.7 **Test Alternatives <*test-alts*>.** The element <***test-alts***> contains alternate tests that may be performed at the current location in a troubleshooting procedure. The choice of tests is qualified by some condition, such as equipment configuration or current state of the equipment or troubleshooting. This element is used to present test options in paper manuals and it appears in the same navigational reference (<***navref***> see L.4.7.10) with an alternative path tests (<***alts***> see L.4.7.3) for an IETM. The element contains an optional introductory paragraph (<***para***> see L.4.1.5.3) followed by at least one procedural step (<***step1***> see L.4.1.8.2) followed by an optional query to the test (<***query***> see F.10.3.7).

a. DTD fragment for <***test-alts***>:

```
<!ELEMENT test-alts - o (para?, step1+, query?)>
<!ATTLIST test-alts
          %navlink;
          %nodeloc;
          contentref      IDREFS      #CONREF
          %refs;>
```

b. Attributes for <***test-alts***>:

1. **%NAVLINK;** - Refer to common parameter entities for a complete description (see L.5.8).
2. **%NODELOC;** - Refer to common parameter entities for a complete description (see L.5.9).
3. **CONTENTREF** - References the identifier(s) of content elsewhere in the document that should be used as content of the current element instance. When a value is entered, the content of the element becomes EMPTY and the referenced information is used.
4. **%REFS;** - Refer to common parameter entities for a complete description (see L.5.2).

L.4.7.8 **Navigational Paragraph <*navpara*>.** The element <***navpara***> contains a paragraph restating the navigational criteria contained in the sibling expression (<***expression***> see L.4.7.1) or assertion (<***assertion***>

see L.4.7.2) of the same navigational reference (<***navref***> see L.4.7.10) parent. The element is provided to display text of the navigation criteria in paper manuals, recognizing that the wording of conditional navigation instructions differs in the paper and electronic worlds. The same document can then be used by a composition system and an IETM application. The element contains either alert notices (***%alert;*** see L.3.2), procedural steps (<***step1***> see L.4.1.8.2), narrative text (<***text***> see L.3.6) or paragraphs (<***para***> see L.4.1.5.3).

a. DTD fragment for <***navpara***>:

```
<!ELEMENT navpara - o (%alert; | step1+ | text | para+ )>
<!ATTLIST navpara
          %navlink;
          id          ID        #IMPLIED
          contentref  IDREFS    #CONREF>
```

b. Attributes for <***navpara***>:

1. **%NAVLINK;** - Refer to common parameter entities for a complete description (see L.5.8).
2. **ID** - Specifies the unique identifier of the current navigational paragraph.
3. **CONTENTREF** - References the identifier(s) of content elsewhere in the document that should be used as content of the current element instance. When a value is entered, the content of the element becomes EMPTY and the referenced information is used.

L.4.7.9 **Login Script <*login*>.** The element <***login***> contains a login script used to initiate use of and obtain qualifying information for an IETM. The element is EMPTY and all pertinent information is entered through its attributes.

a. DTD fragment for <***login***>:

```
<!ELEMENT login - o EMPTY >
<!ATTLIST login
          script    ENTITY    #CURRENT>
```

b. Attributes for <***login***>:

1. **SCRIPT** - The external entity containing the login script.

L.4.7.10 **Navigational Reference <*navref*>.** The element <***navref***> indicates a navigation reference element which points to another location in the document (the target). The target location is indicated through the attributes for the element, which defines the type of data target. At the target location, the link-end is inserted as ***%navlink;*** attributes on the element referenced. The element also contains other elements contained within the IETM conditions (***%conditions;*** see L.3.10) and used to qualify the traversal of the link if presented in interactive electronic format.

a. DTD fragment for <***navref***>:

```
<!ELEMENT navref - o %conditions; >
<!ATTLIST navref
            navid       ID                        #REQUIRED
            maintlvl    (depot | operator |
                         gensup | dirsup |
```

```
                 unitlvl | inter |
                 avum-avim | none)      #IMPLIED
skilltrk    NUTOKENS                    #IMPLIED
applic      CDATA                       #IMPLIED
prevloc     %yesorno;                   #IMPLIED
wpid        IDREFS                      #CONREF
pathid      IDREFS                      #CONREF
branchid    IDREFS                      #CONREF
testid      IDREFS                      #CONREF
procid      IDREF                       #IMPLIED
stepid      IDREFS                      #CONREF
figid       IDREFS                      #CONREF
callout     IDREFS                      #IMPLIED
rectifid    IDREFS                      #CONREF
opid        IDREFS                      #CONREF
descripid   IDREFS                      #CONREF
techdescid  IDREFS                      #CONREF
partid      IDREFS                      #IMPLIED
processid   IDREF                       #IMPLIED
%secur;>
```

b. Attributes for <***navref***> :

1. **NAVID** - Specifies the unique navigation reference identifier .
2. **MAINTLVL** - Used to qualify the traversal by authorized maintenance level applicable to this traversal.
   (a) “OPERATOR” - Applies to operator maintenance level.
   (b) “UNITLVL” - Applies to unit maintenance level.
   (c) “GENSUP” - Applies to general support (GS) maintenance level.
   (d) “DIRSUP” - Applies to direct support (DS) maintenance level.
   (e) “INTER” - Applies to intermediate (GS/DS) maintenance level.
   (f) “DEPOT” - Applies to depot maintenance level.
   (g) “AVUM-AVIM” - Applies to aviation unit (AVUM) and intermediate (AVIM) maintenance level.
   (h) “NONE” - Applies to particular maintenance levels.
3. **SKILLTRK** - Used to qualify the traversal by skill track.
4. **APPLIC** - Used to qualify the traversal by configuration applicability.
5. **PREVLOC** - The target reference to use is the previous traversal location.
6. **WPID** - The target reference is a work package identifier.
7. **PATHID** - The target reference is a flowtree path identifier.
8. **BRANCHID** - The target reference is a flowtree branch identifier.
9. **TESTID** - The target reference is a test identifier.

10. **PROCID** - The target reference is a procedure identifier.
11. **STEPID** - The target reference is a procedural step identifier.
12. **FIGID** - The target reference is a figure identifier.
13. **CALLOUT** - The target reference is a callout identifier.
14. **RECTIFID** - The target reference is a rectification procedure identifier.
15. **OPID** - The target reference is an operational procedure identifier.
16. **DESCRIPID** - The target reference is a descriptive material identifier.
17. **TECHDESCID** - The target reference is a troubleshooting technical description identifier.
18. **PARTID** - The target reference is a part identifier.
19. **PROCESSID** - The target reference is a process call identifier.
20. **%SECUR;** - Refer to common parameter entities for a complete description (see L.5.3).

L.5 **Common Attributes.** The following attributes are common throughout MIL-STD-2361(SC) and are entered in the DTDs using parameter entity references.

L.5.1 **Body Attributes.** The attributes are for general use for any SGML element. The attributes defines change levels, equipment configuration, identifier and referencing attributes. By referencing the parameter entity ***%bodyatt;***, the following attributes are available to the associated element.

a. DTD fragment for ***%bodyatt;***:

```
<!ENTITY % bodyatt "inschlvl   NUTOKENS   #IMPLIED
                    delchlvl   NUTOKENS   #IMPLIED
                    label      CDATA      #IMPLIED
                    texttype   NUMBER     #IMPLIED
                    itemid     NMTOKEN    #IMPLIED
                    config     NUTOKENS   #IMPLIED
                    skilltrk   NUTOKENS   #IMPLIED
                    %refs;" >
```

b. Attributes for ***%bodyatt;***:

c. **INSCHLVL** - Specifies the change level(s) at which information was inserted. An audit trail can be maintained by listing multiple change levels separated by spaces.

d. **DELCHLVL** - Specifies the change level(s) at which information was deleted. An audit trail can be maintained by listing multiple change levels separated by spaces.

e. **LABEL** - Specifies the label associated with paragraph, figure, or table. Label is only appropriate for manually enumerated documents. Typically, the rendering system will automatically enumerate the elements requiring numbering, in which case the label attribute is omitted or ignored if present, as specified in the FOSI.

f. **TEXTTYPE** - (pending information from OSD)

g. **ITEMID** - Supplies an identifier of the item, such as SSSN, LRU, part number, or reference designator.

h. **CONFIG** - Specifies the equipment configurations to which element applies.

i. **SKILLTRK** - Designation of the skill level of the user at which the current element of information is aimed. A particular set of values common to all documents has not been created. Currently, the relevant values are set by contract.

j. **%REFS;** - Refer to common parameter entities for a complete description (see L.5.2).

L.5.2 **Reference Attributes.** The attributes are for general use for any SGML element. The attributes defines an identifier and referencing attributes. By referencing the parameter entity ***%refs;***, the following attributes are available to the associated element.

a. DTD fragment for ***%refs;***:

```
<!ENTITY % refs "id         ID       #IMPLIED
                 idref      IDREFS   #IMPLIED
                 assocfig   IDREFS   #IMPLIED">
```

b. Attributes for ***%refs;***:

c. **ID** - An identifier of the element which is assigned at origination and which remains unchanged as the document is revised or updated even though the automatically assigned enumeration or manually-assigned "labels" change (in some cases many times). The value of the "ID" is used when making references to the element from other portions of the document. If no ID is given, none will be maintained and the element can then not be cross-referenced by means of an IDREF.

d. **IDREF** - A reference to an identifier(s). The use of this attribute must be specified in the composition system as it has no implied or default use.

e. **ASSOCFIG** - A reference to a figure(s) associated with the current element.

L.5.3 **Security Attributes.** The attributes are for general use for any SGML element. The attributes defines security classification for the element and is inherent to any children to the element. By referencing the parameter entity ***%secur;***, the following attributes are available to the associated element.

a. DTD fragment for ***%secur;***:

```
<!ENTITY % secur "security   (uc | fouo |
                              c | s | ts)  #IMPLIED
                  restrict   NMTOKENS      #IMPLIED
                  release    NMTOKENS      #IMPLIED
                  codeword   NMTOKENS      #IMPLIED
                  scilevel   %yesorno;     '0'
                  diglyph    NMTOKENS      #IMPLIED">
```

b. Attributes for ***%secur;***:

c. **SECURITY** - Specifies the security classification of the element. If no value is entered the implied value is unclassified.

1. “UC” - Indicates the element is unclassified.
2. “FOUO” - Indicates the element is for official use only.
3. “C” - Indicates the element is confidential.
4. “S” - Indicates the element is secret.
5. “TS” - Indicates the element is top secret.

d. **RESTRICT** - Specifies the restrictions to the information. The value might include: No Foreign Distribution, NATO, etc.

e. **RELEASE** - Specifies the countries to which the document may be released.

f. **CODEWORD** - Specifies any associated code words.

g. **SCILEVEL** - Flag to indicate if element has a Special Compartmentalized Information level; a non-zero value indicates the element has such a designation.

h. **DIGLYPH** - One or more two-letter codes defining the classification of the element. Values are determined by contract.

L.5.4 **Work Package Body Attributes.** The attributes are used for work package SGML elements. The attributes define change level, equipment configuration and referencing attributes. By referencing the parameter entity ***%wpbodyatt;***, the following attributes are available to the associated element.

a. DTD fragment for ***%wpbodyatt;***:

```
<!ENTITY % wpbodyatt "inschlvl   NUTOKENS   #IMPLIED
                      delchlvl   NUTOKENS   #IMPLIED
                      label      CDATA      #IMPLIED
                      texttype   NUMBER     #IMPLIED
                      itemid     NMTOKEN    #IMPLIED
                      config     NUTOKENS   #IMPLIED
                      skilltrk   NUTOKENS   #IMPLIED
                      idref      IDREFS     #IMPLIED
                      assocfig   IDREFS     #IMPLIED">
```

b. Attributes for ***%wpbodyatt;***:

1. **INSCHLVL** - Specifies the change level(s) at which information was inserted. An audit trail can be maintained by listing multiple change levels separated by spaces.
2. **DELCHLVL** - Specifies the change level(s) at which information was deleted. An audit trail can be maintained by listing multiple change levels separated by spaces.
3. **LABEL** - Specifies the label associated with paragraph, figure, or table. Label is only appropriate for manually enumerated documents. Typically, the rendering system will automatically enumerate the elements requiring numbering, in which case the label attribute is omitted or ignored if present, as specified in the FOSI.
4. **TEXTTYPE** - (pending information from OSD)
5. **ITEMID** - Supplies an identifier of the item, such as SSSN, LRU, part number, or reference designator.
6. **CONFIG** - Specifies the equipment configurations to which element applies.
7. **SKILLTRK** - Designation of the skill level of the user at which the current element of information is aimed. A particular set of values common to all documents has not been created. Currently, the relevant values are set by contract.
8. **IDREF** - A reference to an identifier(s). The use of this attribute must be specified in the composition system as it has no implied or default use.
9. **ASSOCFIG** - A reference to a figure(s) associated with the current element.

L.5.5 **Work Package Module Resource Value Attributes.** The attributes are used for work package SGML elements. The attributes define the highlighting of primary procedural step and number of columns. By referencing the parameter entity ***%wprsrc-vals;***, the following attributes are available to the associated element.

a. DTD fragment for ***%wprsrc-vals;***:

```
<!ENTITY % wprsrc-vals "summary-detail   %yesorno;    #CURRENT
                        columns          (1 | 2)      '1'">
```

b. Attributes for ***%wprsrc-vals;***:

a. **SUMMARY-DETAIL** - Specifies the style of writing procedural steps. A summary-detail style, indicated by a nonzero value, summarizes the action in a primary procedural step, usually presented in all-caps, and gives the actual procedure to accomplish the action in a second-level procedure step(s), presented in upper-and-lowercase format. The first time the attribute is referenced for the element it is treated as required, thereafter that it will assume the current attribute value.

b. **COLUMNS** - Specifies the either single or dual columns on a composed page. If no value is entered the default value is single column.

L.5.6 **Tracking Attributes.** The attributes are used for work package SGML elements. The attributes define FGC, LSA origin and modification audit trail attributes. By referencing the parameter entity ***%tracking;***, the following attributes are available to the associated element.

a. DTD fragment for ***%tracking;***:

```
<!ENTITY % tracking "FGC           CDATA      #IMPLIED
                     written-by    CDATA      #IMPLIED
                     written-on    CDATA      #IMPLIED
                     changelvl     CDATA      #IMPLIED
                     last-mod      CDATA      #IMPLIED
                     LSA-ID        CDATA      #IMPLIED
                     insertwp      %yesorno;  '0'
                     deletewp      IDREF      #CONREF">
```

b. Attributes for ***%tracking;***:

c. **FGC** - Specifies the functional group code that applies to the subject of the element.

d. **WRITTEN-BY** - Specifies the original author of a document.

e. **WRITTEN-ON** - Specifies the original creation date.

f. **CHANGELVL** - Specifies the change level.

g. **LAST-MOD** - Specifies the last modification date.

h. **LSA-ID** - Specifies the identification of the subject of the element in logistic support analysis applying to the equipment covered in the TM.

i. **INSERTWP** - Specifies the a new work package since last TM revision. Setting this attribute to a non-zero number will cause the work package sequence number to use the point work package number (the last two numbers). The work package sequence number will use the for the first four numbers the from the prior old revision work package and the point number will count the number of new work packages added from the prior to the old revision work package. After a revision is enacted the attribute is reset to zero. If no value is entered the default is not a new work package.

j. **DELETEWP** - Specifies the work package has been deleted. The attribute is used for a place holder for the composition to determine the work package sequence number. The attribute is using

the default value #CONREF. To maintain the place holder the IDREF references the attribute "WPID". #CONREF causes the content model to become EMPTY and assumes the content model of the referenced material. Therefore, referencing the itself causes no contain to be present and work package sequence number is maintained correctly until the next revision. After a revision is enacted the work package is removed from the document instance.

L.5.7 **Information Chapter Resource Value Attributes.** The attributes are used for information chapter SGML elements. The attributes define whether to include page number with cross reference, highlighting of primary procedural step, number of columns and chapter TOC attributes. By referencing the parameter entity ***%imrsrc-vals;***, the following attributes are available to the associated element.

a. DTD fragment for ***%imrsrc-vals;***:

```
<!ENTITY % imrsrc-vals "pageref          %yesorno;     #CURRENT
                        summary-detail   %yesorno;     '0'
                        columns          (1 | 2)       '1'
                        chap-toc         %yesorno;     '1'">
```

b. Attributes for ***%imrsrc-vals;***:

c. **PAGEREF** - Specifies whether or not cross references include a reference a page number. A non-zero value indicates that the cross reference should include a page number. The first time the attribute is referenced for the element it is treated as required, thereafter that it will assume the current attribute value.

d. **SUMMARY-DETAIL** - Specifies the style of writing procedural steps. A summary-detail style, indicated by a nonzero value, summarizes the action in a primary procedural step, usually presented in all-caps, and gives the actual procedure to accomplish the action in a second-level procedure step(s), presented in upper-and-lowercase format.

e. **COLUMNS** - Specifies the either single or dual columns on a composed page. If no value is entered the default value is single column.

f. **CHAP-TOC** - Specifies whether the chapter includes a table of chapter contents on the chapter title page. The style sheet for the information chapter specifies what contents are extracted to create the TOC. A non-zero value indicates that a TOC should be extracted and printed. If no value is entered the default value is include the TOC

L.5.8 **Navigational Linking Attributes.** The attributes are for use for SGML element incurring IETM functionality. The attributes defines IETM framing information. By referencing the parameter entity ***%navlink;***, the following attributes are available to the associated element.

a. DTD fragment for ***%navlink;***:

```
<!ENTITY % navlink "navrefid      IDREFS                    #IMPLIED
                    traverstype   (seq | agg-seq |
                                   agg-choice | interrupt |
                                   request | confirm |
                                   escape | valuepass |
                                   external)                 #IMPLIED
```

```
                    input-return  IDREF                        #IMPLIED">
```

b. Attributes for ***%navlink;***:

c. **NAVREFID** - References the identifier(s) of a element that points to the current location.

d. **TRAVERSTYPE** - Specifies the type of traversal behavior. The behavior influences the screen interactions and displays.

   1. “SEQ” - Specifies a sequence reference.
   2. “AGG-SEQ” - Specifies an aggregate sequence reference.
   3. “AGG-CHOICE” - Specifies an aggregate choice reference.
   4. “INTERRUPT” - Specifies an interruption reference.
   5. “REQUEST” - Specifies a request reference.
   6. “CONFIRM” - Specifies a confirmation reference.
   7. “ESCAPE” - Specifies a escape condition reference.
   8. “VALUEPASS” - Specifies values are passed with the reference.
   9. “EXTERNAL” - Specifies the reference lays external to the current document.

e. **INPUT-RETURN** - References the identifier of an element that returns a value to the current location. Data to manage the input acceptance is found in attributes for ***<input>***.

L.5.9 **Node Location Attributes.** The attributes are for use for SGML element incurring IETM functionality. The attributes defines IETM framing information. By referencing the parameter entity ***%nodeloc;***, the following attributes are available to the associated element.

a. DTD fragment for ***%nodeloc;***:

```
<!ENTITY % nodeloc  "frame-label   CDATA                     #IMPLIED
                     nodeapplic    CDATA                     #IMPLIED
                     startnode     %yesorno;                 #IMPLIED
                     nodeid        IDREF                     #CURRENT
                     node-type     (yes | no |
                                    true | nottrue |
                                    pass | fail |
                                    unantic | value-branch |
                                    test | step |
                                    alert | statement )      #IMPLIED
                     value-range   NUTOKENS                  #IMPLIED">
```

b. Attributes for ***%nodeloc;***:

c. **FRAME-LABEL** - Specifies a label or title for the frame.

d. **NODEAPPLIC** - Specifies to which equipment configurations the node applies.

e. **STARTNODE** - Specifies whether or not the current element begins a new node and a non-zero value indicates that it does.

f. **NODEID** - Specifies a reference to the current node identifier. Since the default type is #CURRENT, this attribute needs to have a value supplied only when the material bearing the attribute begins a new node or the first time used for the same element name.

g. **NODE-TYPE** - Specifies the information type used by the node

1. “YES” - Specifies the node is a response to a yes condition.
2. “NO” - Specifies the node is a response to a no condition.
3. “TRUE” - Specifies the node is a response to a true condition.
4. “NOTTRUE” - Specifies the node is a response to a not true condition.
5. “PASS” - Specifies the node is a response to a passed condition.
6. “FAIL” - Specifies the node is a response to a failed condition.
7. “UNANTIC” - Specifies the node is a response to an unanticipated condition.
8. “VALUE-BRANCH” - Specifies the node is has a passed value(s).
9. “TEST” - Specifies the node is test condition.
10. “STEP” - Specifies the node is a procedural step.
11. “ALERT” - Specifies the node is an alert notice (warning, caution or note).
12. “STATEMENT” - Specifies the node is a statement or general paragraph.

h. **VALUE-RANGE** - If for the attribute **NODE-TYPE** is "VALUE-BRANCH", this attribute specifies a number range.

L.5.10 **Faultstate Attributes *%faultstate;*.** The parameter entity ***%faultstate;*** is used for tracking suspected and exculpated faults in a system under test. The parameter entity ***%faultstate;*** contains a set of attributes used to track fault information (fault states) during troubleshooting procedures. These attributes may be used with any element type that references this attribute set ***%faultstate;*** in the document type declaration.

a. DTD fragment for ***%faultstate;***:

```
<!ENTITY % faultstate "suspectfaults  IDREFS   #CURRENT
                       clearedfaults  IDREFS   #CURRENT
                       testfaults     IDREFS   #IMPLIED
                       suspect-add    IDREFS   #IMPLIED
                       cleared-add    IDREFS   #IMPLIED
                       culpritfault   IDREFS   #IMPLIED
                       rectifrefs     IDREFS   #IMPLIED">
```

b. Attributes for ***%faultstate;***:

1. **SUSPECTFAULTS** - Reference the identifier(s) of suspected fault conditions. The first time the attribute is referenced for the element it is treated as required, thereafter that it will assume the current attribute value.
2. **CLEAREDFAULTS** - Reference the identifier(s) of possible faults that have been tested and cleared. The first time the attribute is referenced for the element it is treated as required, thereafter that it will assume the current attribute value.
3. **TESTFAULTS** - Reference the identifier(s) the faults under test in the current element.
4. **SUSPECT-ADD** - Reference the identifier(s) what new fault identifiers should be added to the set of suspect faults at this point in the document. Generally new faults may be brought in when moving from one component or assembly to another.
5. **CLEARED-ADD** - Reference the identifier(s) what new fault identifiers should be added to the set of cleared faults. Generally the result of a link traversal.

6. **CULPRITFAULT** - Reference the identifier(s) of a fault that has been isolated as the cause of the malfunction.
7. **RECTIFREFS** - Reference the identifier(s) of a corrective action procedure.

THIS PAGE INTENTIONALLY LEFT BLANK.

Introduction to MIL-STD-2361(SC) SGML Markup

M.1 **Scope.** This appendix describes methods to markup SGML documents in accordance with MIL-STD-2361(SC) SGML constructs. Adhering to the methods defined in this appendix will assisted in applying MIL-STD-2361(SC)SGML constructs to both legacy and new document development.

M.2 **Applicable documents.** Refer to paragraph 2.

M.3 **Introduction to MIL-STD-2361(SC)SGML Markup.**

M.3.1 **Types of tags in MIL-STD-2361(SC).** The elements used by MIL-STD-2361(SC) fall into two types of tags: content tags and structural tags. Content tags embody the functional requirements contained in the respective functional requirements standards and specifications, such as MIL-STD-40051. Content tags have names indicating their data content, such as ***<maintsk>***, ***<install>***, or ***<mac>***. Structural tags, such as ***<para>*** (paragraphs), are based on the physical structure of the document, and are used to "chunk up" the data within the content tags. MIL-STD-2361(SC) tags mix content identification and structural uses, such as ***<step1>***, ***<step2>***, etc.

M.3.1.1 **Applying content tags.** Each of MIL-STD-40051 content parts is comprised of a similar structure. The top level is an information module tag, such as ***<gim>***, ***<mim>***, ***<opim>***, ***<tim>***, ***<pim>***, or ***<sim>***. These top-level tags contain specialized sets of work package elements that are, in some cases, unique to the respective information modules, while, in other cases, common to one or more information module. For example, maintenance information chapter ***<mim>*** can contain service upon receipt work packages ***<surwp>***, preventive maintenance work packages ***<pmcswp>***, maintenance instruction work packages ***<maintwp>***, etc. The top level information chapter tag will be used for building even a single work package.

M.3.1.2 **Tagging legacy data.** There is a great deal of legacy data within the Army. Legacy data, for purposes of this standard, will be defined as any data (paper or digital) that has not been SGML-tagged in compliance with the respective functional requirements standard or specification, MIL-STD-2361(SC), and MIL-PRF-28001. To ensure appropriate tagging conventions and methodology are applied, the following procedures are offered as guidance for applying SGML to legacy data. These procedures are oriented toward the TM requirements set forth in MIL-STD-45001, due to the maturity of that standard and its close association with MIL-STD-2361(SC). However, all of the procedures may be applied regardless of the types of data being converted and tagged.

a. Determine the functional type(s) of publication material to be tagged (i.e., TMs, training products, etc.). Publications developed in compliance with traditional requirements documents are produced as complete books (e.g., front, body, and rear matter) in which the publication technical content is not functionally grouped. SGML tagging of legacy data in compliance with this standard can be accomplished only after the publication data has been restructured into functional groupings.

b. Determine the legacy data (e.g., TM, training product, etc.) restructuring requirements for compliance with the respective functional requirements standard or specification and MIL-STD-2361(SC). Virtually no TM legacy data are structured in compliance with functionally grouped requirements standards and specifications, such a MIL-STD-40051.

c. Once the restructuring requirements have been determined, an outline of the restructured document(s) should be developed. The outline will be used as a guide for restructuring the documents in compliance with the functional standard or specification and tagging the restructured document in compliance with the applicable MIL-STD-2361(SC) DTD(s). In the case of TMs, an outline may be developed by selecting applicable MIL-STD-2361(SC) content tags which conform to content requirements, specified in MIL-STD-40051, pertaining to the type and maintenance level of the legacy manual.

d. The appropriate top-level tag from the DTD (e.g., <***mim***>, <***opim***>, etc.) will be selected and applied to the legacy data. Any #REQUIRED attributes of the top-level tag can then be inserted. In particular, <***tmno***> and <***imlevel***> are necessary to construct page header, page footer, and chapter cover page.

e. Select the appropriate text for the module from your legacy data and determine the type of work package for the legacy material being tagged. Work packages will contain complete "start-to-finish" tasks for a particular component, and they may contain multiple tasks and procedures. Work packages may have starting conditions that require completing a previous work package. Starting conditions that are dependent upon completion of another work package must contain a reference to the requisite work package in the Initial Setup under the reference tag <***ref***>. Starting conditions may be referenced in several work packages.

f. Once the work package has been determined, the appropriate work package tag may be applied and any #REQUIRED attributes of that tag inserted. In particular, <***wpno***> is used as source of the work package number.

g. Every work package has its own unique set of content tags. Some work package content is mandatory while other content is optional. First, determine the content-specific tags in the work package. For instance, a maintenance work package <***maintwp***> requires the content specific tags title <***title***>, work package summary <***wpsum***>, work package information <***wpinfo***>, and at least one maintenance task <***maintsk***>. In addition, <***maintwp***> may include tags for warnings <***warning***>, cautions <***caution***>, and/or notes <***note***> and general information <***geninfo***>. Apply the tags to the appropriate legacy text data and insert any #REQUIRED attributes of those tags.

h. As the writer continues to fill in the content requirements, checks of the DTD should be made for any content-oriented tags contained in the third-level tags. For instance, work package summary <***wpsum***> contains only #PCDATA, but work package information <***wpinfo***> can contain eleven optional content tags. As the optional and required content tags are determined and added to the legacy data, the content requirements for the work package are being satisfied. The content tags should be applied to the legacy data to the level of the document requiring content tags.

i. There are some special content tagging considerations that must be addressed when tagging legacy data. The considerations are concerned with General Information with Theory of Operation, Troubleshooting, Maintenance Allocation Chart (MAC), and Repair Parts and Special Tools List (RPSTL).

- General Information with Theory of Operation. When developing the general information with theory of operation portions of a publication chapter, several work packages may require construction, depending on the complexity of the equipment. A work package may contain a whole system theory (<***systhry***>) followed by subsystem theory (<***ssysthry***>), or it may begin immediately with subsystem theory. General information should use an introduction tag (<***intro***>) rather than a <***systhry***> tag. The <***systhry***> tag will be reserved for theory only. Complex systems may need a separate work package constructed for each subsystem. Such work packages will often include data on line replaceable units (<***lruthry***>) and shop replaceable units (<***sruthry***>).
- Fault isolation troubleshooting. Fault isolation that is presented as text instructions rather than in logic diagrams is tagged with a narrative tag <***narrative***> in a troubleshooting work package <***tswp***>. The <***tswp***> consists of a test (<***test***>), a query (<***query***>) as to the result of the test, and alternate paths designated yes <***yes***> and no <***no***>. A <***test***> may contain subtests <***subtest***> if several circuits must be tested. <***Yes***> and <***no***> tags each contain an action (<***action***>).

- Maintenance Allocation Chart (MAC). The maintenance allocation charts are tagged with content tags. The functional group number (<***groupno***>) is followed by the nomenclature of the component or assembly. All of the maintenance information pertaining to that component or assembly should be contained within the qualify function tag (<***qualify***>). The qualify tag is comprised of the maintenance function (<***maintfunc***>); the level to which the maintenance function is assigned (<***maintclass***>), which contains specific maintenance level tags; reference to tools and equipment used in the maintenance (<***teref***>); and any additional remarks (<***remarks***>). The qualify function may contain multiple <***maintfunc***> entries.
- Repair Parts and Special Tool Lists (RPSTL). The DTDs containing RPSTL work packages <***rpstlwp***> do not currently model the list data itself. The list data should be incorporated based on the CCSS database format until revisions are made to MIL-STD-40051. Efforts are currently underway to provide requirements for content tagging the RPSTL list data. The standard RPSTL introductory material is currently included as a boilerplate text entity.

M.3.1.3 **Applying structural tags.** Structural tags, such as paragraph (<***para***>), contain no intelligence about the content of data, but they do flag material for specific treatment by a presentation system. For instance, tagged text can be numbered automatically by a presentation system, but untagged text cannot be automatically numbered. SGML does not recognize carriage returns as processing instructions (e.g., "break line here"), but as marking record boundaries. The presentation system, in general, ignores carriage record boundaries and will not trigger paragraph returns.

M.3.1.3.1 **Titles.** Many elements contain a title (<***title***> see L.4.1.5.1) element content. For instance, all work packages will have a title. Most <***title***> elements are mandatory and contain only character data which is entered after the element <***text***>. If a <***title***> is associated with a counter, the FOSI will specify the appropriate automatic numbering. Titles are tagged <***title***><***text***>TITLE</***text***></***title***> for a title.

M.3.1.3.2 **Paragraphs (<*para*> see L.4.1.5.3).** Paragraphs are common structural tags, included in many content-oriented element content models. Paragraphs contain a parameter entity, %content;, which includes character data (#PCDATA) and various SGML tags that may be contained in paragraph text, such as references, footnote references, index references, change notices, and emphasis tags. Paragraphs are the element through which lists, figures, and tables are included in documents developed in accordance with MIL-STD-2361(SC).

Sub-paragraphs. Titling paragraphs may be preceded by the usual <***title***> element if the content model follows the pattern "(title?, para)+". However, the <***para***> element uses its "parahead" attribute for the title if the DTD does not specify a <***title***> element before every single <***para***>. The information will be bold and inline with the paragraphs.

a. DTD fragment for <***systhry***>:

```
<!ELEMENT systhry - o (title, (specpara | para)+, (ssysthry* |
  (lruthry*, sruthry*)*))>.
```

b. Sample SGML document fragment for <***systhry***>:

```
<systhry>
<title><text>Viewer Mount</text></title>
<para parahead="Bolt Assembly, Vehicle Side">There are three bolts needed for the
plate next to the vehicle.  By bolting these three bolts the viewer can
be fixed to the vehicle.</para>
```

<*para parahead="Revolving Plate"*> The viewer revolves freely due to the revolving plate that is start of the viewer mount.</*para*></*systhry*>

M.3.1.3.3 **Procedures (<*proc*> see L.4.1.8.1).** A procedure is a set of steps that comprise all or part of a task. A procedure may, but does not have to, contain a title. However, if a task, such as "SERVICING", has more than one procedure, the separate procedures will have a title. The distinction between a task name and a procedure title will be maintained and will be explicit. Task names are literals and will be appropriately inserted into the document instance by the FOSI. Procedure titles will be included as content of the <*title*> tag in the document instance.

M.3.1.3.4 **Determination of procedure, task, or work package designation.** There may be publications data where it is difficult to determine if data are procedures, tasks, or work packages. If legacy data contains a long or specific title for a maintenance action, it may be a procedural title. The parameter entity %maintsk; tag may have to be included above the title if not present in legacy data. On the other hand, a long or specific title may signal the beginning of a work package. If tasks like "Removal" or "Installation" are subordinate to the title, it should probably be treated as the title of a maintenance work package. The document instance developer will be required to analyze the legacy data to determine its intent for portraying either procedures, tasks, or work packages.

M.3.1.3.5 **Steps.** The SGML structural tags for steps will be used when tagging legacy data to show the steps within a procedure. Care will be taken to ensure that the steps tags are used correctly. The step tag <*step1*> (see L.4.1.8.2) refers to primary-level step, not the first step in a procedure. The step tag <*step2*> refers to first-level substep, not to step number 2. Sub-steps are contained in next higher step level. Element <*step1*> does not end until the end of any <*step2*> sub-element contained within the <*step1*> parent element. Steps are automatically numbered by the FOSI. To avoid double presentation of step numbers upon printing, delete the literal step numbers from document instance. The same convention applies to indentation of sub-steps, which are indented by FOSI. To avoid duplication of indentation space, all tabs or spaces will be deleted from the legacy document instance.

Steps usually consist of single paragraphs, although multiple paragraphs are allowed. Good writing practice dictates precise separation into steps rather than merging several actions in one step. If a step has an associated warning, caution, or note, it will be tagged with the <*specpara*> tag. The <*specpara*> tag may replace <*para*> as the first element in a step. An end-tag will be included for <*warning*> and <*specpara*>, but are not required for steps or paragraphs. The first step will include the text for the step in a paragraph within the <*specpara*> tag, and the second primary-level step will include a substep. For example:

<*step1*>
<*specpara*>
<*warning*><*para*>Sodium peroxide can cause caustic burns from prolonged skin contact.</*para*></*warning*>
<*para*>Mix the sodium peroxide into a paste with the distilled water.</*para*>
</*specpara*></*step1*>
<*step1*><*para*>Apply a thick layer of the paste over the corroded plate.
<*step2*><*para*>Use the toothbrush to ensure paste coverage in the threaded holes.</*para*></*step2*>
</*step1*>
<*step1*><*para*>After 15 minutes, wash the plate clean of the sodium peroxide paste with distilled water.</*para*></*step1*>

M.3.1.3.6 **Lists.** Lists are usually contained within paragraphs. However, any element with a parameter entity %content; as a content model can contain a list. Warnings, cautions, and notes may also contain lists. The list tag will identify the type of list being tagged. There are three types of SGML lists: random, sequential, and definition lists.

M.3.1.3.6.1 **Random lists.** Random lists (<***randlists***> see L.4.1.2.2) are not numbered. Each item starts a new line of text as is regulated by the FOSI. If the "bullet" attribute is changed to "yes" (by entering <***randlist bullet =”1”***> in the document instance, the items will be bulleted.

M.3.1.3.6.2 **Sequential lists.** The numbers on sequential lists (<***seqlist***> see L.4.1.2.1) are provided by the FOSI. Therefore, any numbers appearing on legacy data numbered lists should be removed during the tagging process, otherwise, the items in the lists will have duplicate item numbers. This applies to nested sequence lists also. Nested sequence list numbering is keyed to the nesting level of the list.

M.3.1.3.6.3 **Definition lists.** Definition lists Definition lists (<***deflist***> see L.4.1.2.3) are used to for lists defining words. A definition list may have a title (<***title***>). A definition list may then have one or more term (<***term***>) each of which must be followed by a definition (<***def***>).

M.3.1.3.6.4 **Numbered lists.** The numbers on numbered lists (<***seqlist***>) are provided by the FOSI. Therefore, any numbers appearing on legacy data numbered lists should be removed during the tagging process, otherwise, the items in the lists will have duplicate item numbers. This applies to nested sequence lists also. Nested sequence list numbering is keyed to the nesting level of the list.

M.3.1.4 **Tables.** There are three types of table structures allowed for use with MIL-STD-2361(SC)DTDs: simple table <***tabmat***> (see L.4.3.1), for simple two-, three-, or four-column tables; CALS table model <***table***> (see L.4.2.1), which is a more complex structure; and MIL-STD-40051 defined standard tables, in which columns and rows are inferred from content-specific tags.

M.3.1.4.1 **Simple tables <*tabmat*>.** All columns in these tables are of equal width and there are no column or row spans. There will be no rules on the tables, no graphics are included, there is a single entry for each column head, and they are never numbered. Simple table cells may contain character data or lists, but will contain no procedures or steps. These tables can be varied by the markup in the document. The following conventions will apply to simple tables:

a. Width of the table (page and column), and number of columns, will be defined in attributes of <***tabmat***>.
b. There will be one <***tabspec***> for each column in the table.
    1. Attribute "no" will give sequential number of column being defined.
    2. Attribute "align" will define text alignment for the entire column.
    3. Attribute "leader" will turn leaders on or off (toggle) in the table body.
    4. Attribute "head" will contain the text of table header.
    5. Attribute "boldhd" will indicate a boldface column head.
    6. Attribute "headrule" will indicate the column head is underlined.
c. There will be one <***tabbody***> with one or more <***tabrow***>.
d. The <***tabrow***> will have one or more <***tabentry***> which can contain content; for more information refer to the common parameter entities section.

M.3.1.4.1.1 **Table specification (<*tabspec*>).** The table specification defines the columns formatting. Default format for the <***tabspec***> is with bold head and left-align columns without leaders. For tables that fit this model, no definition of attributes is required. When the document is processed, the default values will be assumed unless otherwise specified.

M.3.1.4.2 **CALS tables.** The CALS table model defined in MIL-PRF-28001. The following conventions apply to CALS tables:

- May have any number and widths of columns.
- May have multi-level heads, stub columns, and spanning cells or rows.
- May be ruled and rules can be controlled locally.
- May contain graphic elements.
- May contain warnings, cautions, notes, and procedures or steps.
- May be varied by the markup in the document.
- May be numbered or unnumbered using "tablenum" attribute.

a. CALS table structure and markup. The CALS table model follows the general model:

TABLE	<***table***>
COLUMN SPECIFICATION	<***colspec***>
SPAN SPECIFICATION	<***spanspec***>
TABLE GROUP	<***tgroup***>
TABLE HEAD	<***thead***>
TABLE FOOT	<***tfoot***>
TABLE BODY	<***tbody***>

The head, body, and foot each contain:

ROWS	<***row***>
CELL ENTRY	<***entry***>
ENTRY TABLES	<***entrytbl***>

b. Column specifications (<***colspec***>). Colspec are used to define the column characteristics of a <***table***>. Column specifications can be specified separately for head, body and foot (the <***colspec***> of <***tgroup***> control the column specs for the body). The following colspec, used in MIL-STD-2361(SC), is identical to the one used in MIL-PRF-28001.

```
<!ELEMENT colspec - o EMPTY >
<!ATTLIST colspec
      colnum    NUMBER                  #IMPLIED
      colname   NMTOKEN                 #IMPLIED
      align    (left | right |
                center | justify |
                char)                   #IMPLIED
      charoff   NUTOKEN                 #IMPLIED
      char      CDATA                   #IMPLIED
      colwidth  CDATA                   #IMPLIED
      colsep    %yesorno;               #IMPLIED
      rowsep    %yesorno;               #IMPLIED>
```

c. Spanning specification (<***spanspec***>). The spanning specification is used to define the spanned column characteristics of a <***table***>. The following spanspec is used in MIL-STD-2361(SC) and is identical to the one used in MIL-PRF-28001. "Namest" and "nameend" refer to column names set up in <***colspec***>.

```
<!ELEMENT spanspec - o EMPTY>
```

```
<!ATTLIST spanspec
         namest  NMTOKEN   #REQUIRED
         nameend NMTOKEN   #REQUIRED
         spanname NMTOKEN   #REQUIRED
         align   (left | right |
                  center | justify |
                  char)     "center"
         charoff  NUTOKEN    #IMPLIED
         char    CDATA      #IMPLIED
         colsep  %yesorno;  #IMPLIED
         rowsep  %yesorno;  #IMPLIED>
```

d. Table columns and spans. Columns are assigned both a number and a name in <***colspec***>. The column names are referenced in a <***spanspec***> in "namest" and "nameend" to specify start and end of a spanning column. Horizontal spans can be given a name so that they can be referenced in the tagged document instance as an attribute of <***entry***> (the cell). Spanned rows are controlled in <***entry***> by the attribute "morerows" and the column is referenced by name in <***entry***>.

e. Alignment in troubleshooting tables. To indicate how material is aligned within the troubleshooting table, the second column contains, in effect, the third column. For instance, a ruled row in a <***known***> table consists of a <***malfunc***> (which appears in the first column) and one or more <***testing***> tags. The <***testing***> tag includes the contents of both the second and third columns. It contains a <***proc***> (in second column) and an <***action***> (in third column) to be taken in response to the procedure. Each <***proc***> and <***action***> are aligned. If a second <***testing***> tag follows, it starts a new line in the second column, separated by a line space from the material above. When another <***malfunc***> tag occurs, it is separated by a rule from the <***malfunc***> group above.

M.3.1.4.3 **Figures.** Few systems can handle composite figures in which multiple graphic files are positioned within a single figure area using the attributes of <***graphic***>. Keep figure tagging simple. Single-page figures should contain only a <***graphic***> tag, not <***subfig***> or <***macrograph***>. Each illustration should be a single graphic file unless made up of full-page sheets. If a figure contains several sheets, use one <***figure***> tag and a <***subfig***> for each sheet. Figures can be numbered or unnumbered using attribute "fignum". If your legacy data uses unnumbered figures, add ’fignum="0"’ to the <***figure***> tag.

Suggestion is to perform graphic file sizing and cropping in a graphics editor. Using this suggestion will eliminate guess work and the sizing is performed in an application made specifically for the task.

M.3.1.4.3.1 **Graphics.** The <***graphic***> tag is used to refer to the graphic file entity and supply its size, clipping, scaling, placement, etc. The following graphic specification is used in MIL-STD-2361(SC) and is similar to MIL-STD-28001.

```
<!ELEMENT graphic - o EMPTY >
<!ATTLIST graphic
            boardno    ENTITY                  #REQUIRED
            graphsty   NMTOKEN                 #IMPLIED
            llcordra   NUTOKEN                 #IMPLIED
            rucordra   NUTOKEN                 #IMPLIED
            size       (eighth | quarter |
                        half | full)            #IMPLIED
```

```
shape      (vertical | horizontal)  #IMPLIED
hscale     NUTOKEN                  #IMPLIED
vscale     NUTOKEN                  #IMPLIED
scalefit   %yesorno;                #IMPLIED
hplace     (left | right |
            center | none)          #IMPLIED
vplace     (top | bottom |
            middle | non)           #IMPLIED
coordst    NUTOKEN                  #IMPLIED
coordend   NUTOKEN                  #IMPLIED
rotation   NUMBER                   #IMPLIED
%navlink;
%nodeloc;
%refs;
%secur;>
```

M.3.1.4.4 **Warnings, Cautions, and Notes.** Warnings, Cautions, and Notes may be added by two methods: within the <***specpara***> element, or explicitly by including the tags <***warning***>, <***caution***>, and /or <***note***> in the document instance. The method chosen for use will be controlled by content model of an element. If a warning or caution applies to specific step or procedure, it must be contained in that element. This can be accomplished through <***specpara***>. The <***specpara***> element is usually invoked in grouping, i.e., (specpara | para). The <***specpara***> element includes a <***para***> element after an optional and repeating warning, caution, and or note. This <***para***> is mandatory in a <***specpara***>. In steps, this <***para***> is the first paragraph normally contained in the step. Another <***note***> may follow this <***para***>.

M.3.1.4.5 **Assigning attribute values.** Almost every element has associated attributes. There are three global parameter entity sets of attributes that attach to most elements: %refs;, %bodyatts;, and %secur;. These global attributes define, respectively: IDs and ID references; text characteristics like change level or nuclear hardness critical processes; and security level. None of these attributes are required.

a. Local attributes. Many elements have additional attributes, some of which are required. For instance, “tmno” is required on the top module element and "id" is required on the footnote.

b. Cross-reference attributes. To cross-reference an element, insert an ID attribute for the element. Then refer to that ID at the cross-reference point with an <***xref***> or an attribute of the IDREF tag. Insert the ID as a value of the appropriate IDREF attribute. ID values must be unique strings, beginning with an alpha character, after which the IDs can contain both letters and numbers. To help keep ID strings unique, use the beginning alpha character to keep the IDs of work packages, tables, tasks, procedures, figures, index entries, and footnotes separate. These seven elements are the only IDs that must be resolved. The FOSI specifies resolution of the IDREFs. You can use entire words or abbreviations as IDs and they are not required to contain numbers.

c. Cross reference <***xref***> (see L.4.1.3.8). The cross-reference tag <***xref***> uses an IDREF attribute to automatically link to the ID attribute of other elements. The attribute "assocfig" (part of the %ref; attribute set) also has an IDREF value type and it is used to link text and graphics, not for cross-references. The external reference tag <***extref***> (see L.4.1.3.3) is used to reference other TMs or documents outside the document instance, and the reference is inserted as a literal string in the attribute "docno."
   1. Internal reference:

```
<!ELEMENT xref - o EMPTY >
<!ATTLIST xref
            taskid         IDREF            #IMPLIED
            wpid           IDREF            #IMPLIED
            stepstart      IDREF            #IMPLIED
            stepend        IDREF            #IMPLIED
            figid          IDREF            #IMPLIED
            callout        CDATA            #IMPLIED
            tableid        IDREF            #IMPLIED
            tslocid        IDREF            #IMPLIED
            pagelocid      IDREF            #IMPLIED
            pretext        CDATA            #IMPLIED
            posttext       CDATA            #IMPLIED
            %secur;>
```

2. External reference :

```
<!ELEMENT extref - o EMPTY >
<!ATTLIST extref
            docno     CDATA     #IMPLIED
            revno     NUMBER    #IMPLIED
            pretext   CDATA     #IMPLIED
            posttext  CDATA     #IMPLIED
            wpid      CDATA     #IMPLIED
            taskid    CDATA     #IMPLIED
            figid     CDATA     #IMPLIED
            tableid   CDATA     #IMPLIED
            partid    CDATA     #IMPLIED
            %secur;>
```

d. Cross-reference resolution.

- Text. Text references will be to either a task or a titled procedure within a work package. The resolved value for a task will be its name; for a procedure it will be the title. The attribute "taskid" supplies the IDREF to the ID of a task or titled procedure. Only procedures with titles will be referenced. If a procedure does not have a title, the task containing the procedure will be referenced. The work package number will always be invoked through "wpid", if the reference location is in another work package in same information module.
- Work packages. The <***xref***> attribute "wpid" will always be used for cross reference resolution for work packages. The "wpid" value for text, tables, and figures located in another work package in the same information module will always be supplied. When referencing complete start-to-finish contents of another work package, only the "wpid" attribute will be used. Each work package tag will have an "id" attribute. The "wpno"

attribute is not its ID. The same value will not be used for "wpno" attribute and work package "id" attribute.

- Figures and tables. Only numbered figures and tables will be referenced. The FOSI will extract the figure id ("figid") or table number ("tableid"). and use as appropriate. The cross-reference value will not include the title.
- Steps. The word “step” and the step number will be generated the composition system when ONLY step start reference (“stepstart”) is used. When reference a sequence of steps the composition system generates the word “steps” with the first step number (using “stepstart” attribute reference) followed by an “–” and the ending step number (using “stepend attribute reference).

e. Empty tags. Empty elements contain no character data or other elements. Empty tags mark things like cross-references and index entries that will be created by the composition system. Empty tags also mark insertions of external files in non-SGML notations, such as graphic files. “Empty tags” contain the information your composition system needs to resolve reference values in a series of attributes.

Administrative Publications Applications

N. SCOPE

N.1 **Scope.** This appendix contains information on the application of SGML to administrative publications as applied to MIL-STD-2361(SC). Administrative Publications Tutorial Information will be supplied at a later date.

N.2 **Applicable documents.** Refer to paragraph 2.

THIS PAGE INTENTIONALLY LEFT BLANK.

Training Publications Applications

O. SCOPE

O.1 **Scope.** This appendix contains information on the application of SGML to training publications as applies to MIL-STD-2361(SC). Training Publications Tutorial will be supplied at a later date.

O.2 **Applicable documents.** Refer to paragraph 2.

THIS PAGE INTENTIONALLY LEFT BLANK.

FOSI Application as a Style Guide

P. SCOPE

P.1 **Scope.** This appendix contains information on the application of FOSIs as style guides.

P.2 **Applicable documents.** Refer to paragraph 2.

P.3 **Using Formatting Output Specification Instances (FOSI).** This section describes methods for interchanging formatting requirements for technical documents whose source files are tagged according to DTDs developed in accordance with MIL-STD-2361(SC). A DTD interprets the content and structural requirements contained in a functional specification, and the FOSI interprets the style and formatting requirements specified in the DTD.

P.3.1 **Style.** Adherence to rules described in MIL-STD-2361(SC)allows for different receiving processing systems to unambiguously interpret the style and formatting intent of the sending system. By combining the document instance, content-tagged in accordance with the appropriate MIL-STD-2361(SC)DTDs, with the FOSI, the resulting publication will preserve the information content of the original and allow similar presentation. The FOSI's values for the style characteristics are passed to, or used by, the program that performs layout and final composition.

P.3.2 **The Output Specification (OS).** The Output Specification (OS) uses SGML to define style characteristics and provide methods of linking style to elements in an SGML document instance. In fact, the OS is itself a DTD. A FOSI containing specific values for the characteristics which identify the format of a document type is itself an instance of the OS DTD. In this sense, any particular FOSI is just one member of the family of possible instances for the OS DTD.

P.4 **FOSIs in the ASRL.** FOSIs available in the ASRL are designed to function with DTDs developed in accordance with MIL-STD-2361(SC). The FOSIs are fully compliant with, and adhere to the rules described in, ISO 8879 and MIL-STD-28001B Amendment 1. The Army-approved FOSIs contained in the ASRL will facilitate the reuse of DoD SGML DTDs. The overall goal is to allow for the interchange of style and formatting information between all types of publishing systems. This includes current batch and WYSIWYG systems, as well as future systems incorporating newer technology. This is accomplished by the interchange of style information using the semantics described, to be used as input to the formatting system, whether human or computer.

P.5 **Using the FOSI.** A FOSI is developed to present the formatting information of a specific document, or class of documents, based on the MIL-STD-2361(SC)DTD with which the document instance was marked up. The FOSI is written to the Output Specification Document Type Definition (OS DTD). The OS DTD was designed to present a methodology for interchanging formatting information in a standard way. It contains many of the same features of a style sheet and is designed to be read by both humans and machines. However, for a person to read through a FOSI, some knowledge of the Standard Generalized Markup Language (SGML) would be beneficial as well as knowledge of the OS DTD. The process of using a FOSI to produce a document is as follows.

a. A document would be marked using the SGML tagging scheme provided by the DTD written for that document type.
b. A FOSI would be prepared designating the formatting information for the document type. The FOSI provides all the necessary formatting information. Within the FOSI, this information is associated with the elements and/or attributes of the DTD written for that document. For example, the FOSI might specify that a chapter title is to be centered, bold, sanserif, in 10 on 12 type. The document being tagged using SGML tags would simply have the SGML tags:

```
<chapter> <title><text>THIS IS THE TITLE<text><title>....<chapter>
```

The user does not have to alter the FOSI or provide formatting information in any manner, other than to mark up a document using the elements and attributes provided in the DTD. It should be understood, however that the FOSI has itself been written to a DTD. This is why the formatting information can be interchanged in a standard way. If formatting information needs to be changed for a given document (for example, chapter titles will now be quad left), the FOSI will have to be changed to reflect this, and parsed to make certain it is following the OS DTD. An organizational policy and procedure for such changes should be developed, implemented, and adhered to. The user should not be allowed to make arbitrary changes to the FOSI.

SGML Reference Material

Q. SCOPE

Q.1 **Scope.** This appendix contains reference information.

Q.2 **Applicable documents.** Refer to paragraph 2.

Q.3 **How to Keep Up with SGML.** There are several ways to find out more about SGML and to keep up to date with any SGML developments, and new products. The following paragraphs describe some of the channels that users of the ASRL can use.

Q.4 **The SGML Users' Group.** The objectives of the SGML User's Group is to promote the use of the Standard Generalized Markup Language and to provide a forum for the exchange of information about SGML. Regional chapters exists and frequent meetings are organized for developers and users of SGML. For more information contact SGML Users' Group PO Box 361, Great Western Way Swindon, Wiltshire SN57BF, United Kingdom (phone +44 793 512 515; fax +44 793 512 516).

Q.5 **The GCA.** The Graphic Communications Association is a nonprofit organization, affiliated to the Printing Industries of America, Inc. For more information contact Graphic Communications Association 100 Daingerfield Road Alexandria, VA 22314–2888.

Q.6 **Books and Magazines.** For book references see the information documents section of this handbook. The SGML Newsletter, **<*TAG*>** is published monthly by the SGML Associates, Inc. and the Graphic Communications Association. The magazine is a reliable source of information on SGML ideas, tips literature, products and conferences. Subscriptions may be obtained from: SGML Associates, Inc.,**<*TAG*>** The SGML Newsletter, 6360 S Gibraltar Circle, Aurora, CO 80016–1212.

Q.7 **Servers.** Information about SGML may be obtained from comp.text.sgml Usenet Newsgroup on the Internet which contains an archive of messages, postings and additional information. The World Wide Web is a source for information on SGML a starting point is the SGML Consortia and Users' Group at http://www.sil.org/sgml/groups.html.

INDEX

A

Additional Authorization List (AAL) Work Package (Operator Only) 272
Administrative Publications
    Applications
        Scope 447
Ammunition Information Work Package 157
Ammunition Maintenance Information Module 157
Ammunition Work Package 293
Applicability
    Department of the Army
        Contractors 1
ARMY SGML REGISTRY AND LIBRARY (ASRL)
    Description 36
ASRL
    Administrator
        Address
            Electronic Mail 48
    Assistance 40
    Capabilities
        Reuse 36
    Concept
        Background
            Organization 36
    FOSIs in the ASRL 451
    Internet Access 40
    Operations
        Access 39
    Services
        Assets 37
    SGML Objects
        Procedures for submitting to ASRL
            New Constructs and SGML Objects 38
Attributes
    Assigning Values 444
Auxiliary Equipment Maintenance Information Module 163
Aviation Supporting Information Chapter 311

C

CDRL

Data Call
PDP
Publication Development 34
Common Elements 361
Component Checklist Work Package 302
Components of End Item (COEI) and Basic Issue Items (BII) Lists Work Package . . . 266
Composing with SGML
DTD Hierarchical Relationships
Elements
Attributes and Entities 11
Conformance
MIL-STD-40051
Valid SGML Document 32
Controls and Indicators Work Package 88
Conversion
Legacy Data 30

D

Definitions
Terms
Acronyms 5
Delivery of Data
Medium
MIL-STD-1840
Tape 35
Depot Mobilization Requirements Work Package 300
Document Instance
Creation 32
Document Instances 12
DTD 12
Certification
Parse Log 46
Delivery Options 48
Information
Submission Format
Abstract 44
Outline
Contractor 29

E

Entity
General

Text
Nested 55
Equipment Description Work Package 75
Expendable and Durable Items List Work Package 280

F

Files
Graphics
Exchanging
ISO Character Set 56
Foreign Ammunition (NATO) Work Package 293
Formatting output Specification Instance (FOSI)
MIL-PRF-28001
Format Characteristics
FOSI and DTD Relationship 15
FOSI
Using FOSI 451
FOSI Application
Style Guide
Output Specification 451
Front Matter for Technical Equipment Manuals 327

G

General Information with Theory of Operation Chapter 61
General Information Work Package 63
Generic Supporting Information Work Package 310
Grouping Information with SGML
Content Tagged Information
Databases 22

I

Illustrated list of Manufactured Items Work Package 288
Initial Setup
Work Package
Setup Guide 24
Interactive Electronic Technical Manual (IETM)
MIL-2361(SC)
MIL-PRF-87269
MIL-PRF-87268 35
Introduction
Scope of Handbook
Implementation 1

Introductory work package 314
Inventory Work Package 294

L

Lubrication Instructions Work Package 148

M

Maintenance Allocation Chart (MAC) Work Package 254
Maintenance Information Chapter 103
Maintenance Test Flight Chart Work Package 156
Maintenance Test Flight Maintenance Information Module 150
Maintenance Test Flight Maintenance Procedures Work Package 150
Maintenance Test Flight Troubleshooting Guide Work Package 221
Maintenance Work Packages 123
Mandatory Replacement Parts List Work Package 291
Manual 325
MIL-STD-2361(SC)
Types of Tags
Applying Content Tags
Tagging 437
MIL-STD-2361(SC) Common SGML Elements SGML Elements
<action> 364
<add> 366, 419
<aindx> 373
<alts> 364, 422, 423, 425
<anchor> 371, 372, 397
<and> 366, 419
<appconfig> 410, 411
<append> 366, 420
<assertion> 364, 420, 422, 423, 425
<boolean> 421
<(boolean> 366
<cageno> 362, 364, 402, 413
<callout> 362, 364, 372, 400
<caution> 361, 363, 364, 367, 368, 381
<change> 362, 364, 381
<cleared> 425
<colspec> 387–390, 392, 393
<condition> 411, 412
<ctrlind-val> 362, 364, 403
<ctrlind> 362, 364, 402
<def> 370, 371, 400

<deflist> 361, 370
<disjoint> 366, 420
<div> 366, 419
<dwgname> 362, 364, 403, 415
<dwgno> 363, 364, 403, 404, 415
<dwgreq> 410, 415
<emphasis> 363, 364, 379
<emphterm> 363, 364, 379, 380
<empty> 365, 418
<entry> 363, 391, 392
<entrytbl> 391, 393
<eq> 366, 418
<eqpconds> 410, 416
<exponent> 366, 419
<expression> 364, 417, 420, 422, 423, 425
<extref> 363, 364, 372, 373, 413, 415
<fail> 365, 418
<faultstate> 364, 424
<figure> 363, 371, 372, 396, 397
<flghtsafe-part> 363, 364, 404
<float> 365, 366, 418, 421
<ftnote> 363, 364, 377
<ftnref> 363, 364, 377, 411
<ge> 366, 419
<geninfo> 404
<graphic> 363, 367, 368, 396, 398, 399
<gt> 366, 419
<head> 365, 418
<icon-set> 367, 402
<identno> 411, 413
<idivide> 366, 419
<index-val> 418, 419
<index> 365, 418
<indxref> 363, 364, 373, 374, 411
<input> 366, 367, 420, 421, 433
<integer> 366, 421
<intersect> 366, 420
<intro> 405
<item> 363, 369, 370
<itemref> 411, 413
<le> 366, 419
<legend> 396, 398, 400, 401

<login> 426
<lt> 366, 418
<lubricant> 363, 364, 405
<maintlvl> 410, 411
<max> 365, 418
<member> 366, 420
<min> 365, 418
<minus> 366, 419
<mod> 366, 419
<modelno> 363, 364, 405, 406, 408, 413
<mtrlpart> 410, 414
<mult> 366, 419
<name> 363, 364, 406, 408, 411
<nameid> 411, 412
<navpara> 364, 425, 426
<navref> 363, 364, 372, 377, 378, 381, 382, 396, 403, 404, 406, 407, 411–417, 420, 422–427
<ne> 366, 418
<neg> 365, 418
<nil> 366, 367, 421
<not> 365, 418
<note> 361, 363, 367–369, 381
<nottrue> 365, 418
<nsn> 363, 364, 406–408, 413
<null> 363, 364, 380
<or> 366, 419
<outcome> 366, 367, 421
<pageloc> 363, 364, 374, 376
<para> 361–364, 367, 368, 371, 378, 379, 381–386, 408, 409, 420, 425, 426
<partno> 363, 364, 407, 408, 413
<pass> 365, 418
<persnreq> 410, 415
<plus> 366, 419
<proc> 362, 363, 381, 382
<process-call> 364, 422, 423
<process-return> 422–424
<process> 422, 423
<prompt> 364, 417, 420, 422
<property> 417, 420–422, 424
<qty> 411, 413
<query> 425
<randlist> 361, 370, 420
<real> 366, 421

<ref> 415, 416
<refs> 410
<remv> 366, 419
<row> 390, 391, 393
<sc> 363, 364, 407, 413
<scope> 408
<seqlist> 361, 369
<sequence> 366, 367, 419, 421, 422
<set-diff> 366, 420
<set> 366, 367, 421
<setup-item> 411–417
<simref> 363, 364, 374, 375, 413
<size> 365, 418
<spanspec> 387–390, 392
<specenv> 410, 417
<specpara> 361–363, 367, 382–386, 408
<step1> 363, 364, 381, 382, 425, 426
<step2> 382, 383
<step3> 383, 384
<step4> 383, 384
<step5> 384, 385
<step6> 384, 385
<step7> 385, 386
<step8> 385, 386
<store> 366, 420
<string> 366, 421
<subfig> 396, 398
<subsequence> 366, 420
<subset> 366, 420
<subtitle> 361, 362, 378
<suspect> 424
<symbol> 363, 364, 401
<tabbody> 394, 395
<tabcontent> 391
<tabentry> 363, 395, 396
<table> 363, 386, 387, 394, 396, 398
<tabmat> 363, 394
<tabrow> 395
<tabspec> 394, 395
<tail> 365, 418
<tbody> 388, 390, 391
<term> 370, 371

<test-alts> 364, 422, 425
<testeqp> 410, 413, 414
<text> 377, 378, 403, 404, 406, 409, 412, 426
<tfoot> 388, 393
<tgroup> 386–388
<thead> 388, 393, 394
<title> 361–364, 369, 370, 377, 378, 381, 386, 394, 396
<titlepg> 408
<tmno> 413
<tools> 410, 414
<torque> 363, 364, 409
<trblrefs> 410, 416
<true> 365, 418
<trunc> 365, 418
<tslocptr> 363, 364, 375
<tswp> 376
<undef> 365, 418
<union> 366, 420
<value> 419
<valuepass> 364, 424
<verbatim> 363, 364, 380, 381, 396
<vol-rear> 362
<voltage> 363, 364, 409
<volume> 362
<warning> 361, 363, 364, 367, 368, 381
<wpinfo> 374, 410
<wpsum> 409, 410
<xor> 366, 419
<xref> 363, 364, 375, 376, 413, 415
MIL-STD-2361(SC) GIM Chapter SGML Elements SGML Elements
<calref> 74
<comp-item> 77, 78
<config> 80
<copyrt> 75
<cpcdata> 71
<descwp> 62, 75, 76
<destructmat> 71
<deviation> 74, 75
<ecp> 74
<eir> 70
<eqpconfig> 75, 80
<eqpdata> 75, 79

<eqpdesc> 77
<eqpdiff> 75, 78, 79
<eqpinfo> 75, 77
<geninfo> 75
<gim> 61, 62, 75
<ginfowp> 62–65, 70
<handreceipt> 70
<hcp> 73
<intro> 82
<loa> 72
<locdesc> 75, 77, 78
<lruthry> 82, 83
<mfrr> 70
<mobreq> 75
<navref> 78–80, 82, 83
<nomenreflist> 72
<para> 70–75, 77, 80, 82
<pssref> 71
<qainfo> 72, 73
<scope> 70
<secref> 73, 74
<sftyinfo> 73
<specpara> 77, 80, 82
<sruthry> 82–84
<ssysthry> 82, 83
<subtitle> 82
<supdatawp> 63, 84, 85
<systhry> 82
<thrywp> 62, 81
<title> 70, 75, 82
<titlepg> 61
<wrntyref> 72
MIL-STD-2361(SC) MIM Chapter SGML Elements SGML Elements
<accept> 109
<acceptqual> 143, 144
<acptrejinsp> 129, 140, 160, 161
<actionreq> 143, 171, 172
<adjust> 129, 144
<align> 129, 141
<alignproc> 112, 113
<ammotype> 162
<ammowp> 157, 158

<areainspec> 169, 172
<arm> 162
<assem> 129, 142
<auxeqp-item> 165
<auxeqpwp> 163, 164
<calibration> 129, 144, 145
<calign> 106, 112
<caution> 129, 153, 159, 164
<cautions> 152, 154, 155
<checked> 121
<chkeqp> 108, 109
<chklist> 131, 132
<cl-proc> 152–155
<clean> 129, 139, 140
<compnt-assem> 109, 143, 166
<condition> 133, 134, 143
<contents> 157
<cover> 129, 136, 137
<coverpage> 131, 132
<crewmember> 121, 122
<crit.insp.tab> 108, 109
<date> 132, 169, 171
<defect.tab> 142, 143
<defect> 160
<defecttype> 143
<disassem> 129, 139
<dodac> 162, 163
<emphterm> 156
<eqpnotavail> 122
<extconn> 112, 113
<extpwr> 129, 138
<extref> 143
<figure> 139, 142, 152, 154, 155, 157, 169, 172
<finalinspec> 169, 172
<flight> 154, 155
<geninfo> 106, 115, 117, 129, 148, 150, 157, 159, 165
<geninspec> 169
<handling> 160
<hoist> 129, 137
<hover> 152, 153, 155
<ident-fault> 171, 172
<indentfault> 170

<initials> 170–172
<inspec-area> 169, 170
<inspec-form> 169, 172
<inspec-head> 169
<inspec-item> 169, 171
<inspecphase> 171
<inspinstitm> 129, 138, 139
<insppt> 133
<install> 106, 111, 129, 144
<interck> 152, 153
<interval> 120
<intro> 152
<intropara> 117, 118
<item-condition> 166, 167
<item> 110
<itemno> 120
<jack> 129, 135
<landing> 152, 153, 155
<location> 109, 110, 166
<login> 103
<lube> 129, 142
<lubewp> 105, 148, 149
<maintsk> 129, 131, 165
<maintwp> 105, 123, 124
<manhours> 121
<markings> 159–161
<mim> 103, 104
<modelno> 165
<modreq> 132
<moor> 129, 136
<mrplpart> 122, 123
<mtfchartwp> 150, 156
<mtfprocwp> 150–152
<name> 132, 165
<navref> 108, 134, 159, 160, 162
<ndti> 129, 140
<nonrepairable> 109, 110
<note> 129, 152–155, 159, 164, 168
<nsn> 132, 165
<opchk> 129, 138
<opsym> 152–155
<orsch> 129, 146

<otherck> 154, 156
<packing> 160, 161
<paint> 129, 141
<para> 107, 108, 110–113, 118, 121, 122, 131, 134–138, 140, 144–146, 148, 150, 152–155, 159–162, 167
<park> 129, 135, 136
<partno> 132, 165
<pecul.insp.tab> 108, 110
<period> 120, 121
<perioddef> 118–120
<perseqpwp> 105, 113, 114
<phaseno> 169, 170
<pis> 129, 145
<pmcs-entry> 118–120
<pmcsintro> 117
<pmcsproc> 121, 122
<pmcstable> 118
<pmcswp> 105, 115, 116
<pmi-cklistwp> 167, 168
<pmiwp> 105, 147, 148
<pms-form> 166
<pms-inspecwp> 165, 166
<pms-item> 166
<pms-proc> 167
<postflight> 156
<ppm> 129, 146
<precal> 106, 112
<prechkadj> 111, 112
<preckadj> 106
<preflghtreq> 152
<prelanding> 154, 155
<preserv> 106, 111
<preshopaction> 133, 134
<prestart> 154
<pretakeoff> 154, 155
<proc-item> 152–155
<proc> 107, 108, 110–113, 115, 131, 134–142, 144–146, 148, 150, 152, 154, 155, 159–162
<processeqp> 108, 110, 111
<pshopanal> 129, 131
<pshopchk.tab> 131, 133
<pss> 129, 146, 147
<pwron-inspec> 169, 172

<reason> 132
<remarks> 110
<remove> 129, 139
<repair-rplc> 129, 141
<repairable> 109
<requiremnt> 170–172
<revform> 132, 133
<revtag> 132, 133
<ris> 129, 145
<runup> 154
<scope> 164
<secitem> 132, 133
<seqno> 109, 166
<serialno> 132, 169, 170
<service> 129, 134, 161, 162
<setconn> 112, 113
<shltr> 106, 107
<shutoff> 152, 153, 155, 156
<sig> 132, 133
<siting> 106, 107
<sling> 129, 137
<specpara> 107, 108, 110–113, 118, 121, 134–138, 140, 144–146, 152–155, 159–162
<start> 152–154
<status> 170–172
<step1> 110, 118, 121, 122, 153, 167
<subtitle> 109, 117, 133, 135–138, 150
<surmat> 106, 108
<surtsk> 106, 107
<surwp> 105, 106
<table> 111, 139, 144, 157
<taxi> 152–155
<test-inspect> 129, 142, 143
<test-pass> 129, 145, 146
<text> 120, 134
<title> 106, 107, 109, 110, 115, 117, 118, 121, 129, 133, 143, 148, 150, 152, 153, 157, 159–162, 164, 166–169, 172
<totalhrs> 169–171
<tow> 129, 135
<unpack> 108
<unpacking> 160, 161
<warning> 129, 152–155, 159, 164
<wpinfo> 106, 115, 117, 129, 148, 150, 159–162, 164, 165

<wpsum> 106, 115, 117, 129, 148, 150, 159, 165
<xref> 143, 162
MIL-STD-2361(SC) OPIM Chapter SGML Elements SGML Elements
<assem> 92, 94
<caution> 90, 92, 98
<ctrldesc> 89
<ctrlind> 90
<ctrlindtab> 89, 90
<ctrlindwp> 87–89
<ctrlrow> 90
<decon> 98, 99
<ecm> 98, 100
<emergency> 96, 100
<figure> 89, 90, 94
<fording> 98, 99
<function> 90, 91
<geninfo> 89, 92, 98, 101
<inddesc> 89
<indrow> 90, 91
<initial> 92, 94
<instructplt> 94–96
<key> 90
<login> 87
<note> 90, 92, 98
<oper> 92, 95
<operaux> 92, 95
<opertsk> 92
<opim> 87, 88
<opunutsk> 96, 98
<opunuwp> 96, 97
<opusualwp> 87, 91, 92
<para> 93–96, 98–100
<prepmove> 92, 96
<proc> 93–96, 98–101
<shelter> 92, 93
<site> 92, 93
<specialproc> 101, 102
<specpara> 94, 95
<specprocwp> 87, 100, 101
<title> 89, 90, 92–96, 98–101
<titlepg> 87
<unusualenv> 98, 99

<warning> 92, 98
<wpinfo> 92, 98
<wpsum> 92, 98
MIL-STD-2361(SC) PILOT-OPIM Chapter SGML Elements SGML Elements
<pilot-opim> 323
MIL-STD-2361(SC) PIM Chapter SGML Elements SGML Elements
<figure> 314
<howtouse> 314
<introwp> 313–315
<login> 313
<pim> 313, 314
<pl> 316, 317
<plwp> 313, 316, 317
<pnindxwp> 313, 318
<prtindex> 318–320
<refdesindxwp> 313, 319
<stl> 317, 318
<stlwp> 313, 317
<title> 314, 316–319
MIL-STD-2361(SC) Production SGML Elements SGML Elements
<address> 338, 339
<aindx> 342–344, 348
<authent> 342, 344, 348
<avail> 331
<aviation> 325, 348, 349
<avmodule> 325, 357, 358
<back> 342, 345, 348
<caution> 334
<chgdate> 327, 333, 334, 341
<chglist> 338, 339
<chgno> 327, 333, 338, 341
<chgsheet> 338, 346, 347
<chgwp> 339, 340
<city-state> 339
<contents> 341, 342, 346, 347, 352
<da2028> 342, 344, 348
<date> 337, 338
<decon> 352–354
<deflist> 343
<descwp> 355
<destr> 331, 333
<disclos> 331, 332

<dist> 331, 332
<eic> 329, 330
<emergency> 352, 353
<export> 331–333
<fltsafety> 352–354
<foldsect> 342, 344, 348
<frnt> 327, 349, 350
<frntcover> 327, 328, 345–347, 352
<gim> 342, 357
<glossary> 342, 343, 348
<graphic> 327, 331
<haz-icons> 335
<hazard> 336
<hazdesc> 335, 336
<hazid> 336, 337
<hazmat> 335
<helplink> 342
<howtouse> 342, 346, 347
<insertpg> 339, 340
<loepwp> 337
<lubewp> 355
<maintwp> 355
<manual> 325, 326
<mim> 342, 357
<modelno> 329, 330
<module> 355, 356
<modules> 325
<name> 329, 330
<note> 337
<notices> 327, 331, 338, 341
<nsn> 329, 330
<opim> 342, 357
<opsup> 354
<para> 331–334, 336, 338–341, 352–354
<partno> 329, 330
<pcklist-manual> 350
<perseqpwp> 355
<pilot-opim> 349, 350, 359
<pilotop> 349
<pim> 342, 357
<pmcswp> 355
<pmiwp> 355

<proc> 342, 353, 354
<production> 325
<prtitle> 328, 329, 338, 341
<rear> 342, 343, 349–351, 355
<removepg> 339, 340
<reporting> 341
<rev.chg> 337, 338
<rev.date> 337
<rev.no> 337, 338
<rpstlfmt> 345
<rpstlfrnt> 345
<safetysup> 352
<servbranch> 328, 329
<servnomen> 327, 333, 339, 341
<ship> 351
<shipim> 359
<sim> 342, 349, 350, 355, 357
<simsup> 355
<stitle> 328, 331, 341
<subject> 329–331
<super> 331, 332
<supplement> 325, 351, 352
<surwp> 355
<symbol> 335, 336
<sysnomen> 329, 330
<testmodulewp> 355
<thrywp> 355
<tim> 342, 357
<title> 331, 332, 334, 335, 337, 338, 352–354
<titleblk> 341, 345–347, 352
<tminfono> 328, 329
<tmno> 328, 329
<tmtitle> 327, 328
<tsindxwp> 355
<tswp> 355
<vol-rear> 347, 348, 351, 355, 357
<volume> 346, 351, 355, 357
<warnextrac> 334
<warninfo> 334, 335
<warning> 334
<warnsum> 334, 346, 347, 352
<wpinfo> 354

<wpno> 340
<wpsup> 354
MIL-STD-2361(SC) SHIPIM Chapter SGML Elements SGML Elements
<shipim> 321
MIL-STD-2361(SC) SIM Chapter SGML Elements SGML Elements
<aal-entry> 279
<aal> 272, 279
<aalwp> 272, 273, 278
<abbrev> 308, 309
<acceptance> 305, 307, 308
<actionreq> 301, 302
<ammowp> 293
<avim> 262, 263
<avmac> 254, 261
<avmaintclass> 262
<avqualify> 261, 262
<avsim> 245, 311
<avtool-entry> 287, 288
<avtoolidlist> 285, 287
<avum> 262, 263
<bii-entry> 271
<bii> 266, 270, 271
<biitab> 271
<cageno> 269, 272
<callout> 284
<cargoloading> 298
<category> 268, 271, 279, 280, 286, 287, 292
<certreq> 305, 307
<coei-entry> 268, 269
<coei> 266–268
<coeibiiwp> 266, 267
<coeitab> 267, 268
<compassem> 255, 256, 261
<compchklist> 302, 303
<compchklistwp> 302
<compname> 303, 304
<crew> 259
<damage> 303, 305
<daterec> 303, 304
<dcpno> 269, 272, 279
<decalinfo> 282, 283
<def> 305, 306

<depot> 260, 262
<desc> 269, 270, 272
<direct> 260
<dwgno> 289
<eqploadwp> 283, 284
<expdur-entry> 280, 281
<explist> 280, 281
<explistwp> 280
<extref> 287, 288
<figno> 289, 290
<figure> 267, 271, 283, 284, 288, 298, 310
<first> 305, 308
<flyable> 296, 297
<formchart> 298, 299
<fuel-oilwt> 298
<geninfo> 296, 298
<gensup> 260
<genwp> 310, 311
<groupno> 255, 256, 261
<illno> 269, 271
<inprocess> 305, 307
<intermediate> 296, 297
<intro> 254, 255, 266, 272, 279, 280, 283, 285, 288, 290, 291, 294, 300, 302, 308
<inventoriable> 294, 295
<inventorywp> 294
<item> 284
<itemno> 281, 286, 288, 293
<kvl> 282
<loaddesc> 283, 284
<loadlist> 284, 285
<loadwtlimit> 298
<login> 245
<lvl> 281
<mac> 254–256
<macwp> 254, 255
<maintclass> 257, 258
<maintenance> 263, 264
<maintfunc> 257, 262
<manuindx> 288, 289
<manuwp> 288, 289
<missneqpwt> 298
<mobilreq> 300, 301

<mobiltab> 301
<mobilwp> 300, 301
<mrpl-entry> 292, 293
<mrpl> 291, 292
<mrplwp> 291, 292
<name> 254, 256, 263, 282, 286, 288, 289, 293, 303
<natowp> 293, 294
<nsn> 263, 269, 272, 279, 282, 286, 288, 293, 303
<operator> 259
<org> 259
<pageloc> 301
<para> 254, 287, 291, 297, 301, 306, 307, 310
<partdesc> 289, 290
<partno> 269, 272, 286, 288, 289, 293, 303
<persnnlwt> 298
<prdinv> 294–296
<prelim> 299, 300
<proc> 291, 297, 310
<pubident> 254
<publist> 254
<qawp> 305, 306
<qty> 270, 272, 279, 288, 293, 303
<qtyrec> 303–305
<qualify> 255, 257
<recfrom> 303, 304
<refwp> 248, 253
<remarkcode> 265
<remarkcol> 287, 288
<remarkrefs> 257, 261, 262, 265
<remarks> 265, 287, 288
<remarktab> 254, 264, 265
<responsibility> 305, 306
<rpstlwp> 265, 266
<scope> 254
<security> 294, 295
<serno> 303
<short> 296, 297
<sim> 245
<specialreq> 305–307
<specpara> 254, 291, 297, 310
<storagewp> 296
<stowagewp> 282

<stowinfo> 282, 283
<subtitle> 310
<table> 298
<tblno> 289, 290
<tblnoteref> 287, 288
<tblnotes> 286–288
<terefcode> 263, 264
<terefs> 257, 261–263
<tereqtab> 254, 263
<title> 254, 255, 261, 263, 264, 266, 272, 280, 282–285, 288, 290, 291, 293, 294, 296–298, 300–302, 305, 308, 310
<titlepg> 245
<tool-entry> 286
<toolidlist> 285, 286
<toolidwp> 285
<toolno> 263, 264
<torqueval> 290, 291
<torquewp> 290, 291
<typedes> 256, 257
<um> 270, 272, 279, 282
<unit> 258, 259
<uoc> 269, 270, 272
<weightbalwp> 297–299
<weighteqp> 299, 300
<weightinst> 298, 299
<wireid> 308, 309
<wiringdiag> 308, 310
<wiringwp> 308, 309
<wpinfo> 297
<wpsum> 297
<wtbalance> 298
<xref> 301

MIL-STD-2361(SC) TIM Chapter SGML Elements SGML Elements

<action> 180, 186, 187, 189, 203, 205, 206, 234, 235, 240
<alertblock> 238, 241
<answer> 229
<bit-module> 218, 219
<block-entry> 210, 211
<blockref> 209, 211
<branch> 238, 241
<branchref> 241, 243
<checkstep> 184, 186

<ckremarks> 217
<comp-locator> 197
<condition> 203, 210, 216, 224–226
<criteria> 217, 218
<dataitem> 216
<disconnect> 182, 237, 238
<end-statement> 244
<end-statemnt> 231, 243
<endblock> 241, 243
<entry-point> 198, 199
<extern-content> 232, 234
<fault-ids> 194, 212, 213
<fault> 194, 195
<faultdesc> 194, 195
<faulthpath> 204
<faultitem> 211–213
<faultmsg> 187, 189
<faultpath> 200, 203, 204
<faultref> 212, 213
<faultreports> 180, 190, 191, 218, 219
<faulttest> 200, 201
<figure> 175, 176, 183, 190, 196, 197, 218, 221
<flowtree> 182–184, 198, 207, 218, 219, 238
<follow-on> 187, 189
<for> 227
<funcdepend> 196, 197, 221
<functnl-flow> 198, 206, 207
<geninfo> 176, 180, 184, 186, 190, 195, 221, 237
<graphic> 189, 203, 205–207, 226, 231, 234, 236, 238, 241
<harness-indx> 198
<helpinfo> 210
<helplink> 176, 180, 213, 219, 221
<hookup> 182, 184
<howtouse> 175
<indication> 186, 206, 234
<initial-cond> 200, 225, 226
<input> 218, 230–232, 234, 236, 237, 242
<interconnect> 196, 221
<item-func> 216, 217
<known-info> 209, 211
<known-malfunc> 198, 200, 201
<locref> 231, 241, 243

<logic-graphic> 207, 208
<login> 173
<loop> 227
<maintwp> 194
<malfunc> 202, 204
<memdata> 216
<memloc> 216
<messageindx> 186, 187
<messageproc> 186, 189, 190
<messages> 180, 186, 188
<messagewords> 186, 187, 190
<modelno> 194
<mtf-tswp> 173, 221, 222
<name> 180, 194, 216
<navref> 180, 183, 184, 201, 203–206, 208, 213, 215–218, 225, 227–229, 231–235, 238, 240, 241, 244
<nsn> 194
<opcheck> 183–185
<opertest> 198, 205, 206
<origin> 238, 239
<otherdata> 216, 217
<outcome> 186, 231–234, 236, 237
<pageloc> 231, 241, 243
<para>182, 189, 196–198, 203, 205, 213, 217, 221, 226, 227, 230, 233, 234, 236, 241, 243, 244
<partno> 194
<passfailck> 198, 213, 214
<pathreftbl> 209, 210
<prob-cause> 209, 212, 224
<proc-cleanup> 218, 219, 224, 226, 236, 237
<proc> 184, 189, 225, 226, 231, 237
<prompt> 231
<query> 228, 237, 240
<queryreason> 209, 213
<question> 228, 229
<rectif> 225, 235, 243, 244
<refinfo> 209, 213
<response> 216, 217
<schematic> 197, 221
<signal-item> 215
<specpara> 182, 203, 205, 227, 234, 236, 243
<step1> 189, 203, 226, 231, 234, 235
<step2> 228

<step> 184, 186, 198, 226, 231, 235–237, 241, 243
<subproc> 184, 198, 231, 236, 237
<suspect-fault> 205, 234, 235
<symp-title> 200
<sympno> 179
<symprefs> 194
<symptom> 208, 215
<sysdesc> 195, 196, 221
<sysname> 202, 204
<system> 208
<table> 176, 183, 184, 190, 196, 198
<techdescwp> 173, 193, 196, 197, 219, 220
<test> 183, 184, 206, 240, 243, 244
<testblock> 239, 241, 243
<testdesc> 182, 183, 186, 198, 218, 219
<testflow> 196
<testing> 203
<testmodule> 180, 182, 183
<testmodulewp> 173, 180, 181, 184, 193
<testoption> 240
<testref> 235–237, 243
<testunit> 206
<text> 203, 208, 216, 217, 225
<tim> 173, 174
<title> 175, 176, 178, 180, 182, 184, 189, 190, 195, 197, 198, 200, 210, 219, 221, 223–225, 227, 236–238, 240
<titlepg> 173
<ts-category> 178, 179
<tsguide> 223
<tsindx-entry> 178, 179
<tsindx> 176, 178
<tsindxowp> 176
<tsindxwp> 173, 176–178
<tsintrowp> 173, 175
<tslocptr> 231
<tsproc> 182, 184, 198, 206, 231, 236, 240
<tswp> 173, 191–193, 196, 197, 219
<while> 227, 228
<word> 187, 189
<wpinfo> 180, 200, 226
<wpsum> 180, 200
<xref> 180, 187, 189, 224

Module 355

N

Notes
Key Words
Searches 50

O

On-Vehicle Equipment Loading Plan Work Package 283
Operation Under Unusual Conditions Work Package 96
Operation Under Usual Conditions Work Package 91
Operators Instruction Information Chapter 87

P

Parsing
MIL-STD-2361(SC)
TM DTDs 32
Part Number Index Work Package 318
Parts Information Chapter 313
Parts Information Module 313
Personal Equipment Work Package 113
Phased Maintenance Inspection Checklist Maintenance Information Module 167
Phased Maintenance Inspections Work Package 147
Pilot Operating Procedures Information Chapter 323
Preventive Maintenance Checks and Services Work Package 115
Preventive Maintenance Services Maintenance Information Module 165
Production Information 325
Public Identifier
Formal
SGML Catalog
System 33
Purpose of Handbook 1

Q

Quality Assurance Requirements Work Package 305

R

Rear Matter 342
Reference Designator Index Work Package 319
References Work Package 248
Repair Parts and Special Tools List (RPSTL) Work Package 265
Repair Parts and Special Tools List Front Matter 345
Repair Parts List Work Package 316

Reuse
Work Package
Filtering and Overlaying
Reuse Examples 23

S

Service Upon Receipt Procedures Work Package 105
SGML
Document Elements 51
IDs
IDREFs 33
Processing Language
Database
DTD 11
Reference Material 453
SGML Database 11
Tutorial
Scope 51
SGML Constructs
Submittal Package
ASRL
USAPA 44
SGML Declaration 12
SGML Markup 12
SGML Objects
ASRL
Tag Descriptions
Constructs 34
SGML Overview
ISO 8879 Standard
MIL-STD-2361(SC) 11
SGML Tags 12
Shared Common Elements 361
Shipping Information Chapter 321
Special and Detailed Procedures Work Package 100
Special Tools Lists Work Package 317
Specialized Aviation Information Module or Work Package 348
Specifications
Standards
Handbooks
Informational Documents 2
Standard General Information Chapter 62

Standard Maintenance Information Chapter 105
Standard Supporting Information Chapter 246
Storage of Aircraft Work Package 296
Stowage and Decal/Data Plate Guide Work Package 282
Structure Tags
    CALS Tables 441
    Definition Lists 441
    Figures 443
    Graphics 443
    Lists 440
    Numbered Lists 441
    Paragraphs 439
    Procedures 440
    Random Lists 441
    Sequential Lists 441
    Simple Tables 441
    Steps 440
    Table Specification 441
    Tables 441
    Titles 439
    Warnings, Cautions and Notes 444
Support Data Work Package for Repair Parts, Special Tools, TMDE and Support Equipment 84
Supporting Information Chapter 245
Supporting Information Module 245

T

Tagging
    Structural Tags 439
Technical Information and Description Work Package 219
Technical Manual Development
    Information Chapter
        Work Package 17
Technical Manual Supplements 351
Technical Publications Applications
    Introduction to MIL-STD-2361(SC) DTD Models 59
Theory of Operation Work Package 81
TM Development
    Contractor
        SME
            TM Writers 30
    General 25
    Legacy 28

MIL-STD-2361(SC)
Requirements
SGML Constructs 27
Traditional Method
Process Flow 26
Tool Identification List Work Package 285
Torque Limits Work Package 290
Training Publications Applications
Scope 449
Troubleshooting Index Work Package 176
Troubleshooting Information Chapter 173
Troubleshooting Introduction Work Package 175
Troubleshooting Procedures Work Package 191
Troubleshooting Test Module Work Package 180

V

Validating SGML Markup
Parsing Defined 15
Volume 346
Volume Rear 347

W

Weight and Balance Work Package 297
What is MIL-STD-2361(SC) SGML
Digital Publications Program
DTDs and SGML Tags 10
Wiring Diagrams Work Package 308

CONCLUDING MATERIAL

Custodians:
Army - AC1

Review Activities:
Army - AL, AR, AV, CR, MR, MI, AT, TE, CR4, GL, CU, AC2

Preparing Activity:
Army - AC1

Project Number:
IPSC 0055

STANDARDIZATION DOCUMENT IMPROVEMENT PROPOSAL

INSTRUCTIONS

1. The preparing activity must complete blocks 1, 2, 3, and 8. In block 1, both the document number and revision should be given.

2. The submitter of this form must complete blocks 4, 5, 6, and 7, and send to preparing activity.

3. The preparing activity must provide a reply within 30 days from receipt of the form.

NOTE: This form may not be used to request copies of documents, nor to request waivers, or clarification of requirements on current contracts. Comments submitted on this form do not consitute or imply authorization to waive any portion of the referenced document(s) or to amend contractual requirements.

I RECOMMEND A CHANGE:	1. DOCUMENT NUMBER MIL-HDBK-2361(AC)	2. DOCUMENT DATE *(YYYYMMDD)* 19990520

3. DOCUMENT TITLE
Department of Defense
Digital Publications Development Implementation Guide

4. NATURE OF CHANGE *(Identify paragraph number and include proposed rewrite, if possible. Attach extra sheets as needed.)*

5. REASON FOR RECOMMENDATION

6. SUBMITTER

a. NAME *(Last, First, Middle Initial)*	b. ORGANIZATION	
c. ADDRESS *(Include ZIP Code)*	d. TELEPHONE *(Include Area Code)* (1) Commercial (2) DSN *(If applicable)*	**7. DATE SUBMITTED** *(YYYYMMDD)*

8. PREPARING ACTIVITY

a. NAME U.S. Army Publishing Agency (Hope Robinson)	b. TELEPHONE (1) Commercial (703) 428-0508 (2) DSN 328-0508
c. ADDRESS *(Include ZIP Code)* ATTN: JDHQSV-PAP-E Hoffman Bldg I 2461 Eisenhower Ave Alexandria, VA 22331-0302	**IF YOU DO NOT RECEIVE A REPLY WITHIN 45 DAYS, CONTACT:** Defense Standardization Program Office (DLSC-LM) 8725 John J. Kingman Road, Suite 2533 Fort Belvoir, Virginia 220060-6221 Telephone (703) 767-6888 DSN 427-6888