INCH - Pound

PPP-B-601H
May 22 1989
SUPERSEDING
PPP-B-601G
October 21 1981

FEDERAL SPECIFICATION

BOXES, WOOD, CLEATED-PLYWOOD

This specification is approved by the Commissioner, Federal Supply Service, General Services Administration, for the use of all Federal agencies.

1. SCOPE AND CLASSIFICATION

1.1 Scope. This specification covers the requirements for new wood cleated-plywood boxes intended for use as containers for domestic and overseas shipment of general materials and supplies (see 6.1).

1.2 Classification.

1.2.1 Types. Cleated-plywood boxes shall be of the following types, as specified (see 6.2).

Domestic type (see 6.1.1)
Overseas type (see 6.1.2)

1.2.2 Styles. Cleated-plywood boxes shall be furnished in the following styles as specified (see 6.2).

Style A (see figures 1, 2 and 4)
Style B (see figures 1, 3 and 5)
Style I (see figure 1)
Style J (see figure 1)

Beneficial comments (recommendations, additions, deletions) and any pertinent data which may be of use in improving this document should be addressed to: U.S. Army Natick Research, Development, and Engineering Center, Natick, MA 01760-5014 by using the self-addressed Standardization Document Improvement Proposal (DD Form 1426) appearing at the end of this document or by letter.

AMSC N/A FSC 8115

DISTRIBUTION STATEMENT A. Approved for public release; distribution is unlimited.

1.2.3 Grades. Unless otherwise specified (see 6.2), the boxes furnished shall be grade B.

Grade A - with preservative treatment
Grade B - without preservative treatment or fire retardent treatment
Grade C - with fire retardent treatment

1.2.4 Types of loads. The boxes shall be furnished for the shipment of type 1 (easy), type 2 (average) and type 3 (difficult) loads, as specified (see 6.2 and 6.3),

1.2.5 Unnailed closure option. When specified (see 6.2), style A or B boxes shall have the top panel modified as specified in 3.2.4 and closed with flat steel strapping as specified in the appendix. Securing the top panel to the box with other than flat steel strapping shall be prohibited.

1.3 Part number. Specification part number for items described in this specification will be formulated as shown in 6.5.

2. APPLICABLE DOCUMENTS

2.1 Government documents. Unless otherwise specified, the following documents of the issue in effect on date of invitation for bids or request for proposal form a part of this specification to the extent specified herein.

Federal Specifications:

FF-N-105 - Nails, Brads, Staples and Spikes: Wire, Cut and Wrought

TT-W-572 - Wood Preservative: Water-Repellent

Federal Standard:

FED-STD-123 - Marking for Shipment (Civil Agencies)

(Activities outside the Federal Government may obtain copies of Federal specifications, standards, and commercial item descriptions as outlined under General Information in the Index of Federal Specifications, Standards and Commercial Item Descriptions. The Index, which includes cumulative bimonthly supplements as issued, is for sale on a subscription basis by the Superintendent of Documents, U.S. Government Printing Office, Washington, DC 20402).

(Single copies of this specification, and other Federal specifications and commercial item descriptions required by activities outside the Federal Government for bidding purposes are available without charge from General Services Administration Business Service Centers in Boston, MA; New York, NY; Philadelphia, PA; Washington, DC; Atlanta, GA; Chicago, IL; Kansas City, MO; Fort Worth, TX; Houston, TX; Denver, CO; San Francisco, CA; Los Angeles, CA; and Seattle, WA.)

(Federal Government activities may obtain copies of Federal standardization documents and the Index of Federal Specifications, Standards and Commercial Item Descriptions from established distribution points in their agencies).

Military Specifications:

MIL-L-19140 - Lumber and Plywood, Fire-Retardant Treated

Military Standards:

MIL-STD-105 - Sampling Procedures and Tables for Inspection by Attributes
MIL-STD-129 - Marking for Shipment and Storage
MIL-STD-731 - Quality of Wood Members for Containers and Pallets

(Copies of Military specifications and standards required by contractors in connection with specific procurement functions should be obtained from the procuring activity or as directed by the contracting activity.)

Federal Regulation:

US Department of Commerce Publications

PS-1 - Construction and Industrial Plywood

(Copies may be obtained from the Superintendent of Documents, U.S. Government Printing Office, Washington, DC 20402.)

2.2 Other publications. The following documents form a part of this specification to the extent specified herein. Unless a specific issue is identified the issue in effect on date of invitation for bid or request for proposal shall apply.

American National Standards Institute (ANSI)

HPMA-HP 1983 - Plywood

(Copies are available for a fee at the American National Standards Institute, Inc., 1430 Broadway, New York, NY 10018.)

American Society for Testing and Materials (ASTM)

D 3951 - Standard Practice for Commercial Packaging

(Application for copies should be addressed to the American Society for Testing and Materials, 1916 Race Street, Philadelphia, PA 19103-1187.)

Standard Grading Rules for Canadian Lumber

(Application for copies should be addressed to the National Lumber Grades Authority, 1055 W. Hastings Street, Vancouver 1, B.C., Canada.)

Standard Grading Rules for Northeastern Lumber

(Application for copies should be addressed to the Northeastern Lumber Manufacturers Association, Inc., Glens Falls, NY 12801.)

Official Grading Rules for Eastern Pine

(Application for copies should be addressed to the Northern Hardwood and Pine Manufacturers Association, Inc., Suite 207, Northern Building, Green Bay, WI 54301.)

Standard Grading Rules for Southern Pine Lumber

(Application for copies should be addressed to the Southern Pine Inspection Bureau, Pensacola, FL 32500.)

Standard Grading Rules for West Coast Lumber

(Application for copies should be addressed to the West Coast Lumber Inspection Bureau, Portland, OR 97200.)

Grading Rules for Western Lumber

(Application for copies should be addressed to the Western Wood Products Association, 1500 Yeon Building, Portland, OR 97204.)

Grading Rules for Northern Hardwood and Pine Manufacturing Association, Inc.

(Application for copies should be addressed to the Northern Hardwood and Pine Mfg. Association, Inc., Suite 207, Northern Building, Green Bay, WI 54301.)

(Technical society and technical association documents are generally available for reference from libraries. They are also distributed among technical groups and using Federal agencies.)

2.3 Order of precedence. In the event of a conflict between the text of this specification and the references cited herein, the text of this specification shall take precedence. Nothing in this specification, however, shall supersede applicable laws and regulations unless a specific exemption has been obtained.

3. REQUIREMENTS

3.1 Material. (see 6.7.)

3.1.1 Plywood for panels. Plywood used in the fabrication of panels shall be in accordance with the commercial standards in table I. The thickness of the plywood shall be as specified in table II or III. Plywood having holes extending through more than two plies shall be prohibited for use as box panels. When the plywood is specified to be surface treated with water repellent wood preservative, the treatment shall be as specified in 3.7.

TABLE I. Plywood PS-1 and HPMA HP 1983 commercial standards 1/

Box type	PS-1	HPMA-HP 1983
Domestic	C-D	Type III, grade 3-4
Overseas	C-D with exterior glue	Type I, grade 3-4

1/ Plywood is furnished unsanded. If smooth finish or sanded panels are required, appropriate sanded grades should be specified in the contract (see 6.2).

2/ End grain joints shall be prohibited for grade 4 veneers.

3.1.2 Lumber for cleats. Lumber for cleats used in the fabrication of plywood boxes shall conform to the following requirements of MIL-STD-731, quality classification class 2 or in accordance with table Ia, as specified (see 6.2). The thickness and width of cleats shall be as shown in table II or III, as applicable. Unless otherwise specified in 3.1.2.1, filler cleats shall be either the same length as the distance between the through cleats or approximately 1/8 inch shorter on each end (see figure 4, inserts A1-A4). When the cleats are to be surface treated with water repellent wood preservative, the treatment shall be as specified in 3.7 (see 6.2) and shall be accomplished prior to use of the cleats in panel fabrication.

TABLE Ia. Commercial standards for lumber (see 2.2)

Rules	Grade 1/ 9/		
CL 2/	Construction	Light	Framing
NELMA 3/	"	"	"
NHPMA 4/	"	"	"
SPIB 5/	"	"	"
WCLIB 6/	"	"	"
WWPA 7/	"	"	"
NHPMA 8/	"	"	"

1/ Structural (str.) design values greater (12.5%) than str. No. 3, but slightly (10%) less than Str. No. 2.

2/ Standard grading rules for Canadian lumber.

3/ Standard grading rules for Northeastern lumber.

4/ Official grading rules for Eastern white pine, Norway pine, Jack pine, Eastern spruce, Balsam fir, Eastern hemlock and tamarack.

5/ Standard grading rules for Southern pine lumber.

6/ Standard grading rules for West Coast lumber.

7/ Standard grading rules for Western lumber.

8/ Standard grading rules for Northern Hardwood and Pine Manufacturing Association, Inc.

9/ Wood shall be completely free of bark to prevent spread of Oak Wilt disease.

3.1.2.1 Drainage for overseas type, styles A and B boxes. Filler edge cleats on top and bottom panels, except on top only when box is provided with skids, shall be either the same length as the distance between the through edge cleats or approximately 1/4 inch shorter on each end. When the filler cleats are the same length as the distance between the through edge cleats, each end shall be either cut at an angle or notched to provide a drainage area between the filler cleat and the plywood of approximately 1/4 inch by 1/4 inch (see figure 4, inserts A1-A4). Provisions for drainage areas are not applicable for cleats placed on the underside of the top panels of the unnailed closure style A box.

Table II. Domestic type, requirements for cleats and plywood

Style of box	Weight of contents		Minimum thickness of plywood 5/		Size of cleats 1/	
					Thickness	Width
	Exceeding	Not exceeding	PS-1 (see table I)	HPMA-HP 1983 (see table I) 3/	All Wood groups (incl)	All Wood groups (incl)
	Pounds	Pounds	Inch	Inch	Inch	Inches
A, B, I and J	0	75	5/16 4/ 6/	1/8	3/4	1-3/8
A, B, I and J	75	150	5/16 4/ 6/	1/8	3/4	1-3/4
A, B, I and J	150	300	5/16 4/ 6/	3/16 4/	3/4	1-3/4

Table II. Domestic type, requirements for cleats and plywood (cont'd)

Style of box	Weight of contents: Exceeding	Weight of contents: Not exceeding	Minimum thickness of plywood 5/: PS-1 (see table I)	Minimum thickness of plywood 5/: HPMA-HP 1983 (see table I) 3/	Size of cleats 1/: Thickness: All Wood groups (incl)	Size of cleats 1/: Width: All Wood groups (incl)
	Pounds	Pounds	Inch	Inch	Inch	Inches
A, B, I and J	300	500	5/16 6/	3/16	3/4	1-3/4
A, B, I and J	500	800	5/16	1/4	3/4	2-1/4
A, B, I and J	800	1000	3/8	5/16	3/4	2-5/8

1/ At no place shall the actual thickness be less than the required thickness, minus 1/16 inch, nor the actual width be less than the required width, minus 1/4 inch.

2/ Alternatively low density wood plywood conforming to HPMA-HP 1983 (table I) may be used.

3/ Low density wood plywood conforming to HPMA-HP 1983 (table I) shall not be used.

4/ 3/20 minimum inch thick plywood conforming to type III, grade 4 of HPMA-HP 1983, may be used in place of the 5/16 inch (3/20 inch thick plywood is not standard thickness in PS-1).

5/ Except that commercial tolerances shall apply.

6/ At the option of the supplier, 1/4-inch sanded plywood may be furnished.

3.1.3 Skids. Lumber used for the fabrication of skids shall conform to the requirements of MIL-STD-731, quality classification class 3, or in accordance with table Ia, as specified (see 6.2).

TABLE III. Overseas type, requirements for cleats and plywood

Weight of contents		Minimum thickness of plywood 6/								Sizes of edge cleats for all groups 1/	
		Types 1 and 2 loads				Type 3 load					
Exceeding	Not exceeding	PS-1 (see table I) 2/		HPMA-HP 1983 (see table I) 3/		PS-1 (see table I) 2/		HPMA-HP 1983 (see table I) 3/		Thickness	Width
		Style		Style		Style		Style			
		A&B	I and J 4/	A&B	I and J 4/	A&B	I and J 4/ 7/	A&B	I and J 4/ 7/		
Pounds	Pounds	Inch	Inch	Inch	Inch	Inch	Inch	Inch	Inch	Inch	Inches
0	100	5/16 8/	3/8	3/16 5/	5/16	5/16 8/	3/8	3/16 5/	5/16	3/4	1-3/4
100	200	5/16 8/	3/8	3/16 5/	5/16	5/16 8/	3/8	3/16	5/16	3/4	1-3/4
200	300	5/16 8/	1/2	3/16	3/8	5/16	15/32	1/4	3/8	3/4	1-3/4
300	400	5/16 8/	1/2	3/16	3/8	5/16	15/32	1/4	3/8	3/4	1-3/4
400	500	5/16 8/	1/2	3/16	3/8	5/16	19/32	1/4	1/2	3/4	2-1/4
500	600	5/16	1/2	1/4	3/8	5/16	19/32	1/4	1/2	3/4	2-5/8
600	800	3/8	5/8	5/16	1/2	3/8	19/32	5/16	5/8	3/4	3-1/4
800	1000	3/8	5/8	5/16	1/2	1/2	19/32	3/8	5/8	3/4	3-1/4

1/ At no place shall the actual thickness be less than the required thickness, minus 1/16 inch, nor the actual width be less than the required width, minus 1/4 inch.

2/ Alternatively low density wood plywood conforming to HPMA-HP 1983 (table I) may be used.

3/ Low density wood plywood conforming to HPMA-HP 1983 (table I) shall not be used.

4/ Top and bottom panels of I and J boxes only, all other panels as specified for styles A and B.

5/ Minimum 3/20 inch thick plywood conforming to type I, grade 4 of HPMA-HP 1983, may be used in place of the 3/16 inch thick plywood. (3/20 inch thick plywood is not a standard thickness in HPMA-HP 1983.)

6/ Except that commercial tolerance shall apply.

7/ Maximum weight of contents for Air Force shipments for styles I and J shall be 150 lbs.

8/ At the option of the supplier, 1/4 inch sanded plywood may be furnished.

3.1.4 Fastenings.

3.1.4.1 Nails. Nails shall be made of steel wire and shall conform to the requirements of FF-N-105. In addition, nails used in the fabrication of panels shall conform to table IV. Nails used in the assembly of boxes shall be cement-coated, acid etched, or mechanically deformed (screw type or annular-ring type). Adjacent cleated panels shall be fastened together with coolers, sinkers, corkers or box nails using the nail size and spacing specified in tables V and VI, as applicable.

TABLE IV. Nails

Contents	Nails Diameter not less than			Length (fastening plywood to cleats)
Pounds	Gage	Inch	Head, inch	Inch
0 to 150	15	0.072	13/64	Not less than the sum of thickness of plywood and cleat, plus 1/8 inch
150 to 1000	14	0.080	13/64	

TABLE V. Domestic type, sizes and spacing of nails for fastening together adjacent cleated panels

Cleats thickness	Maximum spacing of nails all wood groups		Size of nails for wood groups 1/			
	Types 1 and 2 loads	Type 3 load	I	II	III	IV
Inch	Inches	Inches	Penny	Penny	Penny	Penny
3/4	5	4	7	7	7	6

1/ If the nail protrudes through the last edge cleat or splits cleat, than the next smaller size penny nail shall be used.

TABLE VI. Overseas type, and spacing of nails for fastening together adjacent cleated panels

Cleats thickness (inch)	Maximum spacing of nails all wood groups		Size of nails for wood groups 1/			
	Types 1 and 2 loads	Type 3 load	I	II	III	IV
	Inches	Inches	Penny	Penny	Penny	Penny
3/4	5	4	9	8	7	6

1/ If the nail protrudes through the last edge cleat or splits cleat, than the next smaller size penny nail shall be used.

3.1.4.2 Staples or wire stitches. Staples or wire stitches shall be made of steel wire not less than 0.0625 inch diameter (16 gage). The bearing surface of the crown (the underside) shall be not less than 5/16 inch long.

3.1.4.3 Single legged fasteners. Single legged fasteners shall be formed automatically into a nail from sheared off bright, smooth, knurled, or helically fluted low-carbon steel or medium carbon steel (stiff-stock) minimum 15 gage (0.072) wire and driven subsequently by special machine at rapid rate, with sheared-bevel or sheared-square point. The nail length, before driving, shall be a minimum of 1/2 inch longer than the thickness of the material being joined. The automatic machine for driving shall be provided with needle-point knives, J-clinch plate and 1/32 inch counter sink.

3.1.4.4 Other fasteners. Other single legged fasteners, preformed or formed from wire, may be used to the extent specified in 3.2 or 3.3.1.2. Steel wire used to form these fasteners shall have a diameter of not less than 0.0625 inch (16 gage). If wire other than round wire is used, the cross section area shall be equal to that of 16 gage round wire. Points and shanks of these fasteners shall be of a type which, when driven, shall not cause splitting of the wood members. These fasteners, when used, shall be driven so as to provide a minimum clinch of 1/8 inch. These fasteners shall not be used with plywood less than 1/4 inch thick.

3.2 Fabrication of panels. The plywood for each panel of the box shall be secured to the cleats by the use of either nails, staples, wire stitches, or other fasteners as specified under 3.1.4 and table IV at the option of the supplier (see figure 2 insert All Styles Panel Assembly). When assembling cleats to plywood, and filler or intermediate cleats are shorter than the distance between outer edge cleats, the clearance between each end of the filler or intermediate cleat and outer cleats shall be aproximately equal. When assembling cleats to plywood, and the ends of the filler or intermediate cleat are cut at an angle or notched, the clear area of the cut or notch shall be

adjacent to the plywood panel and the end of the filler cleat shall abut the edge of the through cleat. When fasteners specified in 3.1.4.4 are used, the fasteners shall be tested in accordance with 4.4.1.1. Testing is not required for fasteners specified in 3.1.4.1, 3.1.4.2, and 3.1.4.3 when used to join plywood to wood in the fabrication of panels. Fasteners specified in 3.1.4.1 may be driven through the plywood and cleat in either sequence. Fasteners specified in 3.1.4.2 shall be driven through the wood parts in the sequence of plywood to cleats only. Fasteners specified in 3.1.4.3 and 3.1.4.4 shall pass through the wood parts in the sequence of cleat to plywood only. Except as specified in 3.1.4.3 fasteners shall be of such length that a clinch of not less than 1/8 inch is produced. Shiners (protrusion of fastener points) shall not be permitted. Convergent or divergent staples that are of the specified length (not less than the sum of the thicknesses of plywood and cleat, plus 1/8 inch) normally will not protrude through the cleats and do not have to be clinched. The bearing surface of the fastener when driven from the plywood into the cleat shall not be over driven more than 1/32 inch or 10% of plywood thickness whichever is greater, or, 1/16 inch or 10% of the cleat thickness whichever is greater, when driven from the cleat into the plywood. The average spacing of nails or other single leg type fasteners lengthwise of the cleat shall not exceed 3 inches between centers. The average spacing of crown type fasteners (staples, wire stitches, etc.) lengthwise of the cleat, shall not exceed 3-1/2 inches measured between crown centers. The spacing of fasteners specified in 3.1.4.3 shall not exceed 2 inches, or shall be in the ratio of not less than 3 to 2 for equivalent nail diameter, or not less than an average of 1.31 times as many automatically driven wire nails as comparable nails specified in 3.1.4.1. The requirements that provide the least spacing between nails shall prevail. The distance between the nearest edge of any fastener and the edge of cleat shall not be less than 3/8 inch. Also, the distance between the nearest edge of any fastener and end of cleat shall not be less than 3/4 inch nor more than 1½ inches (see symbol D, figures 2 and 3). Fasteners positioned lengthwise of a cleat shall be staggered, where possible, so as to form two parallel rows approximately 3/8 inch from the edges of the cleat (see figures 2 and 3).

3.2.1 Intermediate cleat requirements for panels for domestic and overseas type boxes with type 1 or 2 loads (see 6.3). When one or both dimensions of a panel measured between the inside edge of edge cleats (unframed area) exceeds 24 inches for domestic and overseas type, styles A and B boxes, one or more intermediate cleats of the same width and thickness as the edge cleats shall be applied perpendicular to the greater of the two dimensions between the edge cleats. The distance between edge cleats which are parallel with the intermediate cleats, or between intermediate cleats, shall not exceed 24 inches. When both dimensions of a panel (unframed area) exceed 24 inches and are approximately the same dimensions, the intermediate cleat(s) shall be perpendicular to the filler edge cleats on the ends, top, and bottom, and perpendicular to the through edge cleats on the sides. Regardless of panel size, intermediate cleats are not required perpendicular to the required intermediate cleats unless their purpose is for splicing two pieces of plywood panels larger than 72 by 48 inches. Intermediate cleats for domestic type and overseas type styles I and J shall be as specified (see 6.2). The drainage requirements of intermediate cleats on top and bottom panels shall be as specified in 3.1.2.1. for filler edge cleats.

3.2.1.1 Additional cleats. Any panel of a box having the load concentrated near the center of an unframed area shall be reinforced with an additional cleat of the same width and thickness as the edge cleat.

3.2.2 One and two piece panels. Bottom panels of boxes not exceeding 72 inches in length or 48 inches in width, shall consist of a single piece of plywood. Top and bottom panels of style I boxes, regardless of size, shall consist of a single piece of plywood. All other panels of all style boxes shall consist of one or two pieces of plywood joined by either a lap or butt joint as specified in 3.2.2.1 or 3.2.2.2. Each piece of plywood, in two piece panels, shall be not less than 24 inches in length or width. Plywood joints in adjacent panels shall be not closer than 12 inches of being in line with adjacent parallel joints. Adjacent panels may be designed for assembly with joints running perpendicular to each other.

3.2.2.1 Lap joint. The adjacent edges of the two pieces of plywood shall be lapped not less than 3 inches and fastened by metal stitches, as specified in 3.1.4.2, which pass through both pieces and are clinched. There shall be not less than two parallel rows of stitches spaced not less than 2 inches apart, and the spacing of the stitches in each row shall not exceed 4 inches. The maximum thickness of plywood to be used for this type of joint shall be 3/16 inch.

3.2.2.2 Butt joint. The adjacent edges of the two pieces of plywood shall be butted at the midwidth of a joint cleat specified in a. and b. and each piece fastened to the cleat. The fastening shall conform to the requirements specified for fabrication of panels in 3.2. The length of the joint cleat shall be not less than the distance between edge cleats minus 1/8 inch.

a. Joint cleat for domestic type boxes. The thickness of each joint cleat for domestic type boxes shall be the same as the edge cleats. The width of each joint cleat shall be not less than 2-1/4 inches, except if the width of the edge cleat is greater than 2-1/4 inches, the joint cleat shall be the same width as the edge cleat.

b. Joint cleat for overseas type boxes. The thickness of each joint cleat shall be as specified for edge cleats and the width shall be not less than 1-1/3 times the required width of the edge cleat, but under no circumstances shall the width of the cleat be less than 2-1/4 inches.

3.2.3 Solid wood panels. Solid wood panels may be used when the box panel length or width dimension is equal to less than the sum of three cleat widths. The thickness of the wood member shall be 1/16 inch greater than that specified for the cleat thickness for the loads specified in table II and III. When solid wood panels are used, plywood inner facing may be omitted.

3.2.4 Top panel modification for unnailed closure, style A or B boxes. The top panel of style A boxes shall be modified by providing through edge cleats and filler edge cleats on the underside of the panel (see figure 1A). The top panel of style B boxes shall be modified by providing through edge cleats only on the underside of the panel. The underside cleats shall be of the same width and thickness as required for the outer cleats. The underside cleats shall be positioned on the panel so the cleat edges fit snugly within the applicable side and end panels of the box. Intermediate or reinforcing cleats required for the top panel of the style A or B box are not applicable for cleating the underside of the panel.

3.3 Assembly of the box and skid requirements for both assembled and knocked-down boxes.

3.3.1 Nailing. Each nail fastening the plywood and edge cleat of a panel to the edge cleat of an adjacent panel shall be spaced as specified in table V or VI, as applicable, for the thickness of the cleats used (see symbol identification "S" of box assembly, figures 2 and 3). Boxes assembled with the box nails specified in 3.1.4.1 shall have approximately 10 percent more nails than boxes assembled with cooler or sinker nails. When cleats used are 2-1/4 inches or more in width, 2 nails shall be driven through the cleat near the end into the side of the appropriate cleat on the abutting panel (see figures 2 and 3)

3.3.1.1 Nailing uncleated plywood. For box styles I and J, the uncleated edges of the plywood panel shall be fastened to the cleat on the adjacent panel by nails passing through the plywood and into the cleat. Nails shall be spaced not more than 3 inches apart. Nails shall be not less than 1 inch longer than the thickness of the plywood through which the nail passes for domestic type and not less than 1-3/8 inches longer for overseas type.

3.3.1.2 Staples, wire stitches, single leg, or other fasteners. When staples, wire stitches, single leg, or other fasteneres are used in the assembly of the box, the fasteners shall be tested in accordance with 4.4.1.

3.3.2 Style. Each assembled box shall be in agreement with figure 1 for the style of box specified.

3.4 Skids. Unless otherwise specified (see 6.2), each box intended for use with loads having a gross weight in excess of 200 pounds or when the box gross weight exceeds 100 pounds and both the length and width dimensions exceed 48 inches by 24 inches respectively, then each box shall be provided with a minimum of two skids. Additional skids shall be provided when the distance between skids, measured between the inside edges exceeds 48 inches. Additional skids, as required, shall be positioned so as to divide the area between the end skids into units of equal space. When bolt holes are provided in an end item or equipment, additional skids, if required, shall be located so as to enable the item to be bolted to the skids. The skids or built up skids and rubbing strips shall be a minimum of 2-1/2 inches high and 3-1/2 inches wide. The skids shall

be placed parallel to and extend the full width of the box, (the shortest dimension of the bottom of the box) and shall be set not less than 2-1/2 inches or more than 1/6 the box length from each end. When skids only are used, when specified (see 6.2), a bevel of 45° (±5°) will be applied to the 3/4 inch portion of the skid ends. When rubbing strips are used in conjunction with skids, the skid ends will not be beveled and the rubbing strips will be set back from the ends of the skids a distance of 2-1/2 to 4 inches to allow for sling placement. When 4-way fork entry is required (see 6.2), skids shall be nominal 4 x 4, placed lengthwise not less than 1-1/2 inches nor more than 2-1/2 inches from the container sides and cut out a minimum of 2 inches in depth and of such width as to accommodate forks and slings for handling. When specified (see 6.2), 4-way fork entry shall be accomplished with built-up skids and rubbing strips having minimum dimensions of 3-1/2 inches in width and 4 inches in height with the cutouts being not less than 1-1/2 inches in depth. When skids are used, strapping is required. Each skid shall be notched sufficiently to provide clearance for strapping. Filler cleats of the same thickness as the end or side cleats of the bottom panel and not less than the width of the skids shall be provided between each skid and the bottom panel of the shipping container. Filler cleats shall not be required for style I boxes. The skids shall be secured to the box by nails conforming to type II, style 18 of FF-N-105, and of such length as to penetrate a minimum of 3/4 the skid thickness. These nails shall not protrude through the bottom surface of the skid. The nails shall be arranged in two rows in a staggered pattern, with spacing between nails in each row to be not more than 6 inches. Each row of nails shall be approximately 1/2 inch from the edge of the skid, and the nailing pattern shall begin and end approximatley 1-1/2 inches from the end of each skid and shall not be nailed through the strap notch.

3.5 Container manufacturer's identification. Unless otherwise specified (see 6.2), each plywood box shall be marked with the specification number, box type, box manufacturer's name and address, maximum weight of contents, and type of load. All markings shall be limited to an area of 24 square inches and shall be placed in a low corner of a side panel in letters approximately 5/16 inch high, except that the box specification number shall be in letters approximately 3/4 inch high. These markings shall be arranged in the following pattern as closely as possible:

Fed. Spec. PPP-B-601
Box manufacturer's name and address
Maximum weight of contents (lbs.)
Box type
Type of load
Mod (When required, to designate that the box is in accordance with the specification requirements except for modification authorized in the contract or order.)

3.6 Assembly, closure, and strapping of filled boxes. Where this specification is referenced as a requirement for the shipping of an item or items in a contract, order or specification, the requirements of the appendix shall be a mandatory part of this specification.

3.7 Water-repellent preservative treatment. When grade A boxes are specified (see 6.2), the plywood shall be treated with a water-repellent preservative conforming to TT-W-572, composition C or D, solubilized solvent based, in such a manner that the plywood absorbs not less than 10 grams per square foot (2.2 pounds per 100 square feet (see 6.6). When sanded plywood is specified (see table I and 6.2), the plywood shall be sanded prior to surface treatment. Wood cleats shall be preserved by immersing for a minimum of three minutes in wood preservative conforming to composition C or D, solubilized solvent based, of TT-W-572. When boxes are painted, wood preservation shall be accomplished prior to application of paint.

3.7.1 Dryness of preservative. The box parts when procured in a knock-down (KD) or a complete box, shall, after preservation, be dry as evidenced by the absence of discoloration of red oil soluble dye when tested as specified in 4.4.2.

3.8 Fire Retardent. When specified, Grade C boxes shall be constructed of wood treated in accordance with MIL-L-19140.

3.9 Dimensions. Dimensions of the box shall be as specified (see 6.2). Dimensions shall be given in the sequence of length, width and depth and shall be the inside measurements. Measurements shall be panel to panel. The first two dimensions shall be the open face of the box. A tolerance of plus or minus 1/8 inch shall be permitted in the dimensions.

3.10 Workmanship. No portion of the bearing surface of a fastener shall protrude above the surface of the plywood or cleat, nor shall it be overdriven more than 1/32 inch below the surface of the plywood. Fasteners shall not be visibly deformed except where they are clinched. The plywood shall be cut square and at no point shall the edge of the plywood extend more than 1/16 inch over or 1/4 inch under the panel size as determined by the cleat assembly. The boxes shall conform to the quality of product established by this specification and the occurrence of defects shall not exceed the applicable acceptable quality levels.

4. QUALITY ASSURANCE PROVISIONS

4.1 Responsibility for inspection. Unless otherwise specified in the contract or purchase order, the contractor is responsible for the performance of all inspection requirements as specified herein. Except as otherwise specified in the contract of purchase order, the contractor may use his own or any other facilities suitable for the performance of the inspection requirements specified herein, unless disapproved by the Government. The Government reserves the right to perform any of the inspections set forth in this specification where such inspections are deemed necessary to assure supplies and services conform to prescribed requirements.

4.1.1 Responsibility for compliance. All items must meet all requirements of sections 3 and 5. The inspection set forth in this specification shall becme a part of the contractor's overall inspection system or quality program. The absence of any inspection requirements in the specification shall not relieve the contractor of the responsibility of assuring that all products or supplies submitted to the Government for acceptance comply with all requirements of the contract. Sampling in quality conformance does not authorize submission of known defective material either indicated or actual, nor does it commit the Government to acceptance of defective material.

4.1.2 Responsibility for dimensional requirements. Unless otherwise specified in the contract or purchase order, the contractor is responsible for assuring that all specified dimensions have been met. When dimensions cannot be examined on the end item, inspection shall be made at any point, or at all points in the manufacturing process necessary to assure compliance with all dimensional requirements.

4.2 Quality conformance inspection. Unless otherwise specified, sampling for inspection shall be performed in accordance with MIL-STD-105.

4.2.1 Component and material inspection. In accordance with 4.1, components and materials shall be inspected in accordance with all the requirements of referenced specifications unless otherwise excluded, amended, modified, or qualified in this specification or applicable purchase document.

4.2.1.1 Fastener testing. Fasteners furnished in accordance with 3.1.4.4 shall be tested as specified in 4.4.1.

4.3 End item inspection.

4.3.1 End item visual examination. The boxes shall be examined for defects listed in table VII. The lot size shall be expressed in units of boxes of the same type, style, grade, (when applicable), and size offered for inspection at one time. The sample unit shall be one box and its top. The inspection level shall be S-4. The acceptable quality level (AQL) expressed in terms of defects per hundred units, shall be 4.0 for major defects and 10 for total (major and minor combined) defects.

TABLE VII. End item visual defects

Examine	Defect	Classification Major	Minor
Panels	Panel up to and including 48-inch width by 72-inch length made up of more than one piece of plywood and plywood joints are in line in adjacent panels		X
NOTE:	Panels which exceed either of the above dimensions may be of one or two pieces and lap or butt joined.		
	Lap joint of two-piece panel less than three inches and either piece greater than 3/16 inch in thickness.		X
	Two piece top panel on style I and J box	X	
	Lap joint not secured as specified	X	
	Fastenings not parallel		X
	Fastening spacings more than specified	X	
	Butt joint of two-piece panel not secured with wood cleat centered over joint	X	
	Cleat not fastened to each piece of panel as required in 3.2 for fabrication of panels	X	
	Joint cleat for domestic type box or for overseas type box, as applicable, not as specified in 3.2.2.2	X	
Construction of panel	Cleat not properly positioned	X	
	Cleat not sufficient length		X
	Intermediate or additional cleat missing where required in 3.2.1 and 3.2.1.1	X	
	Assembly not in true alignment		X
	Staple or other fastener not fully and securely driven through adjoining members, as specified	X	
	Staple leg or other fastener point not completely clinched 1/32 or 1/8 inch, as applicable	X	
	Protrusion of fastener point (shiner) through side of cleat	X	

TABLE VII. End item visual defects (cont'd)

Examine	Defect	Classification Major	Minor
Construction of panel (cont'd)	Fastener does not pass through plywood and cleat or cleat and plywood as applicable	X	
	Bearing surface of staple crown or nail head overdriven in excess of 1/32 inch or 10 percent of plywood thickness, which ever is greater	X	
	Top panels for unnailed closure style A or B boxes not modified as specified	X	
Box	Not type, style and grade box specified	X	
	Spacing between metal fasteners in excess of maximum length specified		X
	Fasteners positioned lengthwise of cleats not staggered where possible to form two parallel rows		X
	Less than 3/8 inch between nearest edge of fastener and edge of cleat	X	
	Unnailed closure style A or B box closed by means other than flat steel strapping	X	
Skids	Skids not as specified or placed as specified	X	
Material	Fasteners not type and size specified; not cement coated, acid etched, or mechanically deformed, as applicable	X	
	Plywood less than specified thickness	X	
	Cleats less than specified width and thickness	X	
Manufacturer's identification	Omitted; incomplete; incorrect; illegible; of improper size or location	X	

4.3.2 Packaging examination. The fully packaged end items shall be examined for the defects listed below. The lot size shall be expressed in units of shipping containers. The sample unit shall be one shipping container fully packaged. The inspection level shall be S-2 and the AQL, expressed in terms of defects per hundred units, shall be 2.5.

Examine	Defect
Marking (exterior and interior)	Omitted; incorrect; illegible; of improper size, location, sequence, or method of application.
Materials	Any component missing, damaged, or not as specified.
Workmanship	Inadequate application of components, such as: incomplete sealing or closure of flap, improper taping, loose strapping or inadequate stapling. Bulged or distorted container.
Content	Number per container is more or less than required.

4.4 Methods of inspection.

4.4.1 Component tests for fasteners.

4.4.1.1 General. The tests in 4.4.1.2 and 4.4.1.3 are intended to indicate the relative performance of various types of fasteners when used in the fabrication of wood cleated plywood boxes. Since these tests are comparative in nature, the appropriate cement coated nail designated in 3.1.4.1 and of size specified for the purpose in table IV, V or VI must be tested concurrently with the alternate fasteners being considered to replace it. Five test specimens are required for each variety of fastener to be evaluated. Unless otherwise specified herein, these specimens shall be prepared from the same thickness and group of wood as will be employed in fabricating the boxes and the width of the representative cleat sections of the test specimen shall be the same as that specified for the container in which the fasteners are planned to be used. No test specimen shall contain split members. Nails and other fastenings shall be driven so that neither the head nor the point will project above the surface of the wood (except for the purpose of clinching where required). Specimens shall be cut and fabricated so that only side-grain nailing results. Each of the tests shall be performed on a compression tester equipped with an autographic recorder for producing force-deflection curves. The test fixtures for holding the test specimen, as illustrated in figures 7 and 10, shall be designed so that the applied force is perpendicular to the plane of the test member in contact with the loading block. Also, the test fixtures and loading blocks shall be

dimensioned to provide clearances sufficient to prevent direct contact of the test specimen with the platens of the compression tester at any time during test prior to failure. The platen speed shall be 0.4 inch per minute ± 0.1 inch per minute. Failure is denoted by the complete separation of one member from another in the specimen and shall be recorded in terms of the energy required to produce this separation. The required "energy-to-failure" value for each test specimen shall be determined by measuring the area under the force-deflection curve from the point of initial loading to the failure point. The average "energy-to-failure" values obtained with the nails and with the other fasteners shall be calculated and this data used to determine the total number of fasteners required. The total number of fasteners shall be not less than the total number of nails that would be required. When additional fasteners are required, the increase should be limited to the number which can be used without causing splitting of the wood members of the box during assembly.

4.4.1.2 Test of fasteners for securing cleats to plywood panels. The test specimen shall consist of two sections of representative cleat stock measuring 14 inches in length, each secured with a test fastener as shown in figure 6, to the opposite edges of a representative container plywood panel section measuring 6 by 12 inches. The two fasteners used to assemble the specimen shall be located as shown in figure 6 and shall be clinched not less than 1/8 inch. The test specimens shall be mounted in a test fixture such as illustrated in figure 7. The test fixture rests on the lower platen of the compression tester and the compression load is applied to the wood loading block which transmits the applied force to the specimen member representing the container end section. The loading block dimensions shall be such that the block covers the entire area of the specimen member it is in contact with except for a 1/4-inch clearance between the sides of the block and the adjacent cleat members. Testing of the specimen shall be performed as described in 4.4.1.1.

4.4.1.3 Test of fasteners for container assembly.

4.4.1.3.1 Lateral resistance test. The test specimen shall consist of two sections of representative cleat stock, measuring 2-1/4 by 10 inches, each secured with one test fastener as shown in figure 8 to the opposite edges of a representative container panel section measuring 6 by 6 inches. The total of two test fasteners used to assemble the specimen shall be located as shown in figure 8. The specimen test fixture and the testing procedure shall be as described in 4.4.1.1.

4.4.1.3.2 Direct withdrawal resistance test. The test specimen shall consist of a section of representative cleat stock, measuring 3 by 10 inches, secured with three test fasteners as shown in figure 9, to a representative container panel section measuring 5 by 6 inches. The fasteners used to assemble the specimen shall be located as shown in figure 9. The test specimens shall be mounted in a test fixture such as illustrated in figure 10. The test fixture rests on the lower platen of the compression tester and the compression load is applied to the wood loading block which transmits the applied force to the

member representing the container panel section. The loading block dimensions are such that the block covers the entire area of the specimen member it is in contact with except for a 1/4-inch clearance between the side walls of the slot in the wood loading block and the adjacent parallel surfaces of the test specimen. The depth of the slot should be great enough to prevent contact of the loading block with the portion of the test specimen within the slot at any time during testing. Testing of the specimen shall be performed as described in 4.4.1.1.

4.4.2 End item testing.

4.4.2.1 Dryness of preservative test. The completely assembled boxes shall be tested for dryness of preservative. The lot size shall be expressed in terms of completely assembled boxes. The sample unit shall be one completely assembled box, and the inspection level shall be S-4. The assembled box shall be placed on either end with top open. A red oil soluble dye mixture consisting of 5 parts by weight of red oil soluble dye to 95 parts of borax (see 6.4), shall be applied along the interior juncture lines of the sides and bottom with the end panel of the box. Observation shall be made for discoloration of the solution (red or deep pink) within 5 minutes from time of application when tested at 50°F or above. Discoloration of the solution on any sample unit shall be cause for rejection. KD boxes shall be tested by applying the solution to the samples, and observing the discoloration as stated above. Discoloration of the solution on any sample unit shall be cause for rejection of the lot.

5. PACKAGING

5.1 Packing. Packing shall be level C, or Commercial as specified (see 6.2).

5.1.1 Level C. Boxes are to be shipped completely assembled (except for tops) or knocked down as specified (see 6.2). The tops for boxes shipped completely assembled, and panels of like sizes for boxes shipped knocked down shall be bundled or crated in quantities that permit easy loading and handling. Boxes shall be packed in a manner to insure carrier acceptance and safe delivery at destination at the lowest transportation rate for such supplies.

5.1.2 Commercial packing. Boxes shall be packed in accordance with ASTM-D-3951.

5.2 Marking. In addition to any special marking required by the contract, shipments shall be marked in accordance with FED-STD-123, ASTM-D-3951 or MIL-STD-129, as applicable.

6. NOTES

6.1 Intended use. Boxes covered by this specification are intended to be used for domestic and overseas shipment of general materials and supplies. Styles A and B are fully cleated and are stronger than styles I and J. Style A lends itself to ease in assembly and opening. Style B, with its 3-way corner construction, has greater strength than style A but is more difficult to

assemble and open. Styles I and J provide greater water shedding ability than style A or B. The unnailed closure option for style A or B is intended for use where shiners may damage contents or when reuse of the box is an important consideration.

6.1.1 Domestic type boxes. Domestic type boxes are for domestic shipments and for off-shore and overseas shipments contemplating protected storage and commercial type handling.

6.1.2 Overseas type boxes. Overseas type boxes are for overseas shipments and handling in military supply systems, subject to repeated rehandling and unprotected storage, and which may also be subject to extreme climatic hazards and temperature and humidity conditions such as have been experienced in combat operations in tropical rain forests (e.g., Southeast Asia).

6.1.3 Shipments of subsistence and clothing. Shipments of subsistence or clothing shall not be made in boxes fabricated from toxic-treated plywood.

6.1.4 Shipments of exceptional commodities. For shipments of exceptional commodities, contracting agencies may require better boxes than those specified herein. Where the nature of the contents are classified as explosive or dangerous, the container must conform to the specifications prescribed in the Department of Transportation Regulations Governing Transportation of Explosives and other Dangerous Articles. (The Interstate Commerce Commission Regulations apply to such articles as explosives, flammable and corrosive liquids, compressed gases, flammable solids, oxidizing materials, poisons, etc.)

6.2 Ordering data. Acquisition documents should specify the following:

a. Title, number, and date of this specification.
b. Type and style of box required (see 1.2.1 and 1.2.2).
c. When boxes treated with preservative are required (see 1.2.3).
d. When boxes treated with fire retardent (see 1.2.3).
e. Type of load (see 1.2.4).
f. When unnailed closures are required for style A or B boxes (see 1.2.5).
g. Weight of contents (see table II and III).
h. Quality classification of cleat lumber required (see 3.1.2).
i. Lumber used for fabrication of skids (see 3.1.3).
j. Intermediate cleat requirements for domestic type, and overseas type, styles I and J (see 3.2.1).
k. When skids are not required for boxes with gross weights of 200 pounds or 100 pounds with dimensions of 48 by 24 inches or more (see 3.4).
l. When beveling of skids is required (see 3.4)
m. When four-way entry skids are required and when 3-1/2 by 4 inch built up skids are required (see 3.4).
n. When container manufacturer's identification is not required (see 3.5).

o. When plywood and cleats are to be sanded or water-repellent treated (see table I, 3.1.2 and 3.7).
p. Dimensions of box (see 3.9).
q. Applicable level of packing (see 5.1).
r. Whether boxes are to be shipped assembled or knocked-down (see 5.1.1).
s. When domestic type boxes require strapping (see 10.1).
t. When seal joint specimens are required prior to strapping operations (see 40.1.2.2).

6.3 Type of load (see 1.2.4, 3.2.1 and 3.2.1.1). The construction of an overseas cleated plywood box is determined by the weight of contents and type of load. Load types are defined as type 1, easy load; type 2, average load; and type 3, difficult load; as described under "Load type" in ASTM D 996, Standard Definitions of Terms Relating to Packaging in Distribution Environments.

6.4 Surface treatment. A soluble dye mixture found to be satisfactory for use in the test specified in 4.4.2 is known as 7WB concentrate and may be procured form the Keystone Aniline Co. Under some conditions of exposure, plywood may become stained and discolored by mildew and molds. Such staining is undesirable in boxes or crates when the identification marking may become obscured. Water-repellent preservatives are effective in retarding mildew and similar stains.

6.5 Definitive specification part number. The Specification part number is a definitive part number which will be formulated to identify each item. The part number will be formulated by selecting from the requirement options available in this specification as follows:

Definitive Specification Part Number PPPB601 X X X X X - XX XX XX

Federal Specification Number

Type Designator (see 6.5.1)

Style Designator (see 6.5.2)

Grade Designator (see 6.5.3)

Load Designator (see 6.5.4)

Assembly Designator (see 6.5.5)

Length in Inches (see 3.8)

Width in Inches (see 3.8)

Depth in Inches (see 3.8)

6.5.1 Type designator. A one-position field used to designate the required type of box (see table IX).

TABLE IX

Type Designator	Remarks
D	Domestic Type (see 6.1.1)
O	Overseas Type (see 6.1.2)

6.5.2 Style designator. A one-position field used to designate the required style of box (see table X).

TABLE X

Style Designator	Remarks
A	See Figures 1, 2, and 4
B	See Figures 1 and 3
I	See Figure 1
J	See Figure 1

6.5.3 Grade designator. A one-position field used to designate the required grade of box (see table XI).

TABLE XI

Grade Designator	Remarks
A	With preservative treatment
B	Without preservative treatment
C	With fire retardent treatment

6.5.4 Load designator. A one-position field used to designate shipment loads (see table XII).

TABLE XII

Load Designator	Remarks
1	Easy (see 6.3)
2	Average (see 6.3)
3	Difficult (see 6.3)

6.5.5 Assembly designator. A one-position field used to designate whether the boxes are to be shipped assembled or knocked down (see table XIII).

TABLE XIII

Assembly Designator	Remarks
A	Assembled (see 5.1.1)
K	Knocked-down (see 5.1.1)

6.5.6 Length. Designate the required length of the box in inches (see 3.8).

6.5.7 Width. Designate the required width of the box in inches (see 3.8).

6.5.8 Depth. Designate the required depth of the box in inches (see 3.8).

6.5.9 Sample part number.

PPPB601 - DBB2A - 48 - 24 -18

Federal Specification Number

Domestic Type

Style "B"

Without Preservative Trmt

Average Load

Assembled

Length 48"

Width 24"

Depth 18"

6.6 Wood preservative selection. In general, composition C of TT-W-572 should be the preferred wood preservative unless end items to be packaged in these boxes are food items not packaged in sealed metal cans or materials which might be adversely effected by residual solvents from the composition treatment. The contracting officer should be consulted if there is a question concerning the appropriate wood preservative.

6.7 Recycled material. It is encouraged that recycled material be used when practical as long as it meets the requirements of this document (see 3.1).

6.8 Subject term key word listing.

Boxes
Cleated-plywood
Containers
Shipping
Wood

APPENDIX

BOXES, WOOD, CLEATED-PLYWOOD

10. SCOPE

10.1 This appendix covers requirements for steel strapping and inspection for the application of strapping to boxes, wood, cleated-plywood. When specified (see 6.2), domestic type boxes shall be strapped in conformance with this appendix. Unless otherwise specified (see 6.2), overseas type boxes shall be strapped in conformance with this appendix.

20. APPLICABLE DOCUMENTS

20.1 The following specifications and standards, of the issue in effect on date of invitation for bids or request for proposal, form a part of this appendix to the extent specified herein:

Federal Specification:

QQ-S-781 - Strapping, Steel, and Seals.

Federal Standard:

FED-STD-101 - Preservation, Packaging, and Packaging Materials: Test Procedures.

30. REQUIREMENTS

30.1 General. Strapping required herein shall be performed when the box is packed for shipment. Strapping materials shall be furnished by the box packer, and shall be either round wire strapping conforming to class 2, type V or VI, finish A or B or flat metal strapping conforming to class 1, type I, III or IV, finish A or B of QQ-S-781.

30.2 Size of strapping. The diameter of round-wire strapping shall be as given in table XIV, and size of flat strapping shall be as given in tables XV or XVI, as applicable.

TABLE XIV. Diameter of round wire

Weight of contents	Diameter of wire when different numbers of wire are used			
	2 wires		3 or more wires	
	100,000 pounds per square inch tensile strength	140,000 pounds per square inch tensile strength	100,000 pounds per square inch tensile strength	140,000 pounds per square inch tensile strength
Pounds	Inch	Inch	Inch	Inch
Up thru 70	0.0720 (15 ga)	0.0720 (15 ga)	0.0720 (15 ga)	0.0720 (15 ga)
71 thru 125	0.0800 (14 ga)	0.0720 (15 ga)	0.0800 (14 ga)	0.0720 (15 ga)
126 thru 175	0.0915 (13 ga)	0.0800 (14 ga)	0.0915 (13 ga)	0.0800 (14 ga)
176 thru 250	0.0915 (13 ga)	0.0915 (13 ga)	0.0915 (13 ga)	0.0915 (13 ga)
251 thru 400			0.0915 (13 ga)	0.0915 (13 ga)
401 thru 1000			0.1055 (12 ga)	0.0990 (12-1/2 ga)

TABLE XV. Sizes of flat metal bands

Weight of contents	Dimensions of flat metal bands when different numbers of bands are used	
	2 bands	3 or more bands
Pounds	Inch	Inch
Up thru 70	3/8 by 0.020	3/8 by 0.020
71 thru 125	3/8 by 0.020	3/8 by 0.020
126 thru 175	1/2 by 0.020	1/2 by 0.020
176 thru 250	5/8 by 0.020	5/8 by 0.020
251 thru 400		3/4 by 0.020
401 thru 1000		3/4 by 0.023

TABLE XVI. Size of type III, twist-tied flat metal strapping

Weight of contents not exceeding	Dimensions when different numbers of bands are used	
	2 straps	3 or more straps
Pounds	Inch	Inch
70	0.140 by 0.031	0.138 by 0.025

30.3 Tensile strength. The strength of the seal joint shall be not less than 75 percent of the tensile strength of the flat or round wire strapping, as applicable, when tested as specified in 40.2.

30.4 Tightness. The straps shall be drawn tight so as to sink into the wood at the edges. Unless otherwise specified herein, straps or wires shall be stapled to the cleats at a distance not to exceed 4 inches from the edge or face of the box with cement-coated or chemically etched staples, spaced at intervals of approximately 6 inches. Strapping on the bottom of the box shall not be stapled. Strapping applied over filler edge cleats of the top panel of the box shall not be stapled. Strapping used for unnailed closure boxes shall not be stapled. One staple shall be applied over each strap into the through edge cleats on the top panel of the box. Staples shall be not less than 0.080 inch in diameter (No. 14 gage), in accordance with FF-N-105 or the equivalent cross-section area, unless machine driven, in which case the staple shall be not less than 0.0475 inch in diameter (No. 18 gage). The length of staple shall be approximately 3/4 inch. When driven over flat strap, the staple shall be approximately 1/8 inch wider than the flat metal bands. Staples shall be driven so as not to damage the strapping. Staples shall be applied just prior to shipment where practicable.

30.5 Location and number of straps. All straps shall be applied perpendicular to the edge of the box and be positioned only over the cleats of the applicable style of box. Two straps shall be applied lengthwise to the box on the edge cleats over the ends, top and bottom for styles A and B. Two straps shall be applied lengthwise (horizontally) to the box on the edge cleats over the ends and sides for styles I and J. When intermediate cleats are required on the sides, top, or bottom a girth-wise strap shall be located over each intermediate cleat and shall be positioned on top of the longitudinal straps. When an intermediate cleat is required on an end panel, strapping shall not be required over this intermediate end cleat. In applying straps, care must be exercised so that straps do not pass over voids between cleats and thus become susceptible to snagging. Alternatively, each lengthwise and girthwise strap may be replaced by three corner flat straps each 8 inches long and secured to the container by three staples on each leg pneumatically driven through the strap into the cleats. The flat strapping shall be the same width, thickness, type, finish and grade as specified in 30.1 and table XV. Alternatively, the strapping may be nail on type. Corner straps shall not be used on unnailed closure boxes.

40. INSPECTION

40.1 Box inspection. Boxes shall be inspected to determine compliance with closure and strapping requirements of this appendix. Sampling shall be conducted in accordance with the provisions of MIL-STD-105.

40.1.1 Inspection for closure and strapping. Classification of defects shall be as specified in table XVII. Sample units for this examination shall be one complete box. Lot size shall be expressed in terms of sample units. The inspection level shall be S-3 with an acceptance quality level (AQL) of 4.0 defects per 100 units.

TABLE XVII. Examination for closure and strapping

Examine	Defect
Strapping (flat or round, as applicable)	Not size specified (see tables XIV, XV, and XVI). Not applied as specified. Missing strap Loose strap Torn or cut strap
Staples	More than 4 inches from edge of box Less than size specified Not spaced as specified

40.1.2 Testing of seal joint.

40.1.2.1 Unless otherwise specified in 40.1.2.2, three separate joint specimens shall be taken from sample containers of each lot of strapped boxes submitted for inspection in 40.1.1 and tested as specified in 40.2. If the seal strength of one or more of the three specimens are less than the requirements of 30.3 it shall be cause for rejection of the lot.

40.1.2.2 When specified (see 6.2), three separate joint specimens shall be made prior to the commencement of the strapping of containers and each time a different reel of strapping, strapping tools or kinds of seals are used and submitted for test as specified in 40.2. If the seal joint strength of one or more of the three specimens is less than the requirements of 30.3 it shall be cause for rejection of the lot.

40.2 Tensile strength test of seal joint. The seal joint shall be tested in accordance with Method 2044 of FED-STD-101.

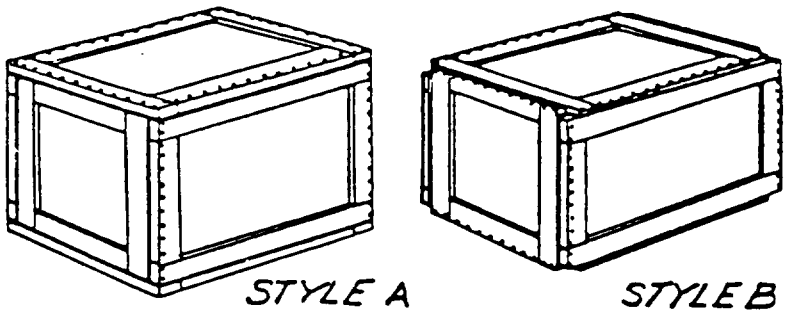

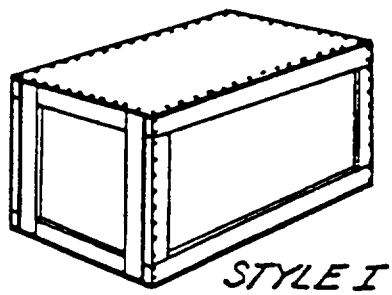

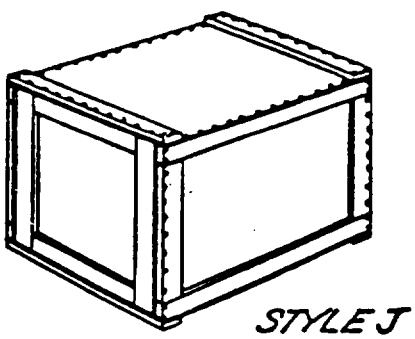

FIG 1—STYLES OF CLEATED PLYWOOD BOXES

10-1-182

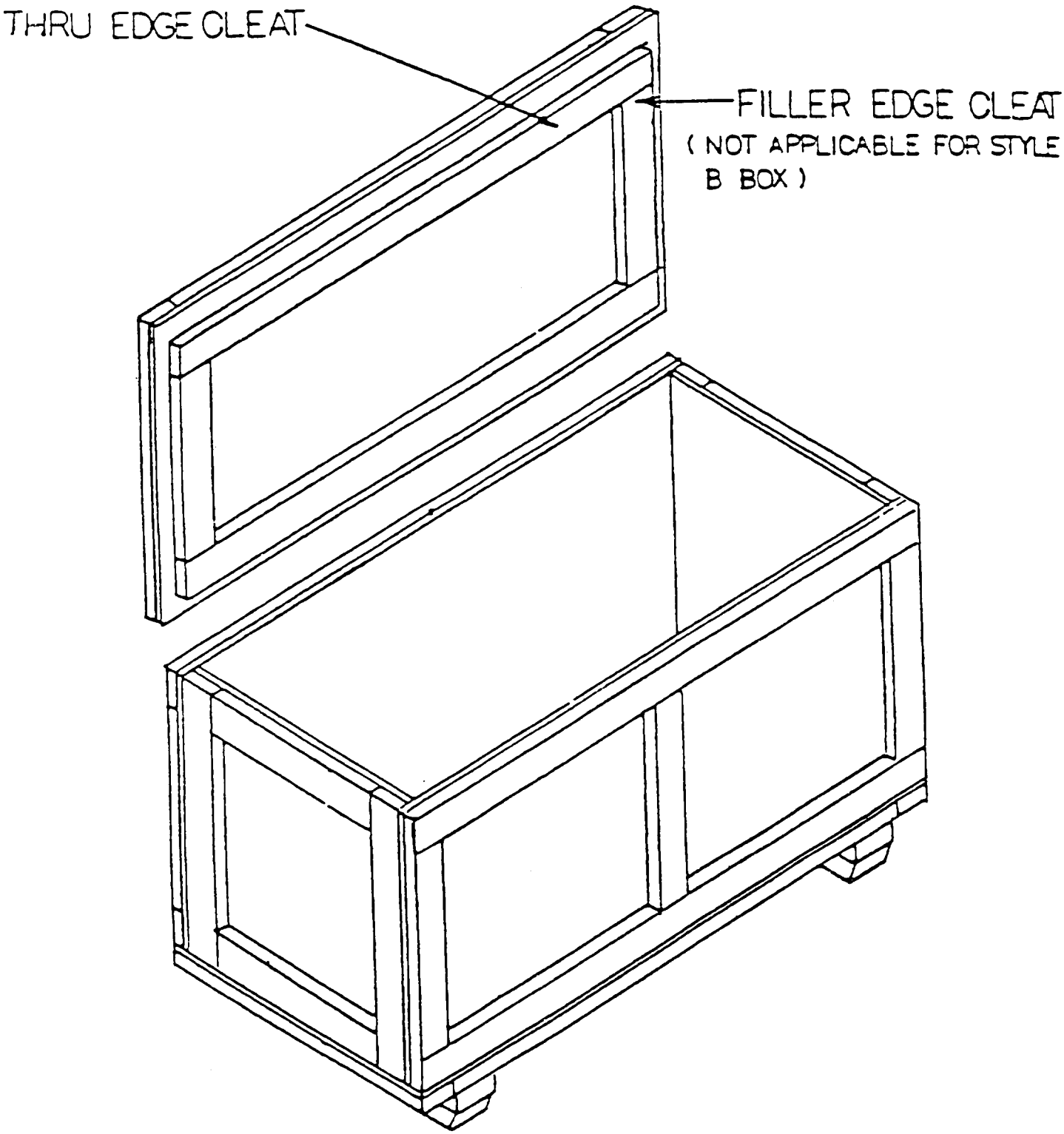

TOP PANEL MODIFICATION OF UNNAILED CLOSURE, STYLE A, BOX

FIGURE 1-A

10-1-615

SYMBOL IDENTIFCATION

"A"- TWO NAILS REQUIRED IF CLEATS ARE 2 1/2" OR MORE IN WIDTH (SEE 3.3.1)

"D"- MIN. DIST. BETWEEN FASTENER AND END OF CLEAT TO BE NOT LESS THAN 3/4 INCH NOR MORE THAN 1 1/2 INCH

"S"- BOX ASSEMBLY NAIL SPACING (SEE TABLES I AND II)

"W"- CLEAT WIDTH (SEE TABLES II AND III)

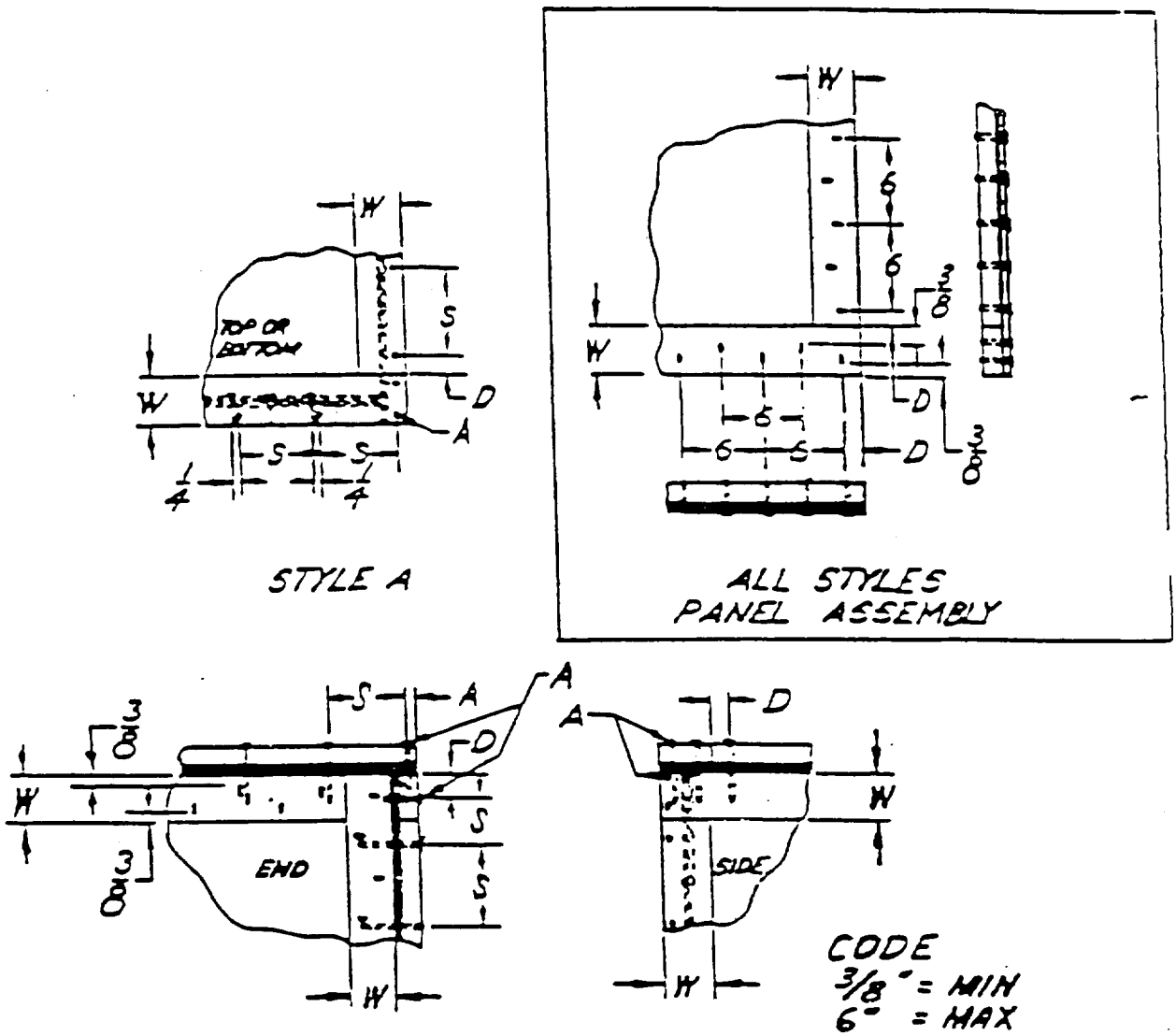

STYLE A
BOX ASSEMBLY

FIG. 2 - NAILING CHART

10-1-183F

PANEL ASSEMBLY.- NAILS, STAPLES, OR OTHER TYPES OF FASTENERS MAY BE EMPLOYED AT THE OPTION OF THE SUPPLIER (SEE 3.2) FASTENERS SHALL BE STAGGERED IN TWO PARALLEL ROWS AS SHOWN.

BOX ASSEMBLY.- S AND D MAY BE VARIED ENOUGH TO PREVENT NAILS FROM STRIKING PANEL ASSEMBLY NAILS OR TO PREVENT NAILS FROM BEING DRIVEN INTO CRACKS.

SYMBOL IDENTIFICATION

"A"-TWO NAILS REQUIRED IF CLEATS ARE 2 1/4" OR MORE IN WIDTH (SEE 3.3.1)
"D"-MIN. DIST. BETWEEN FASTENER AND END OF CLEAT TO BE NOT LESS THAN 3/4 INCH NOR MORE THAN 1 1/2 INCH
"S"-BOX ASSEMBLY NAIL SPACING (SEE TABLES V AND VI)
"W"-CLEAT WIDTH (SEE TABLES II AND III)

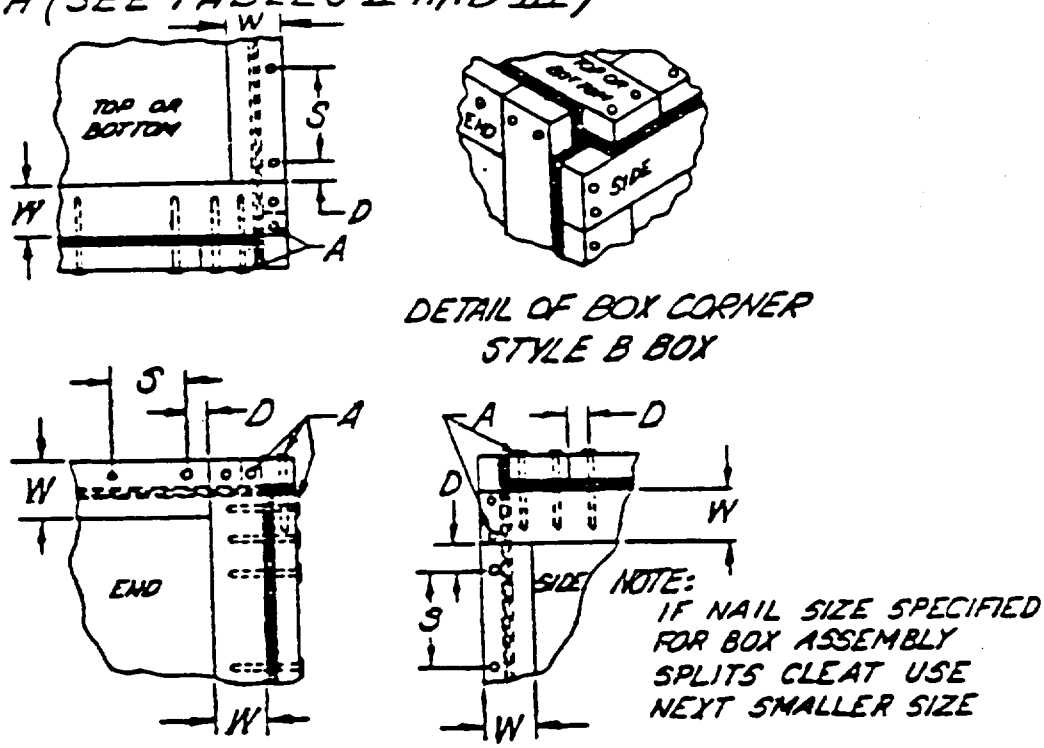

STYLE B
BOX ASSEMBLY

FIG. 3 - NAILING CHART

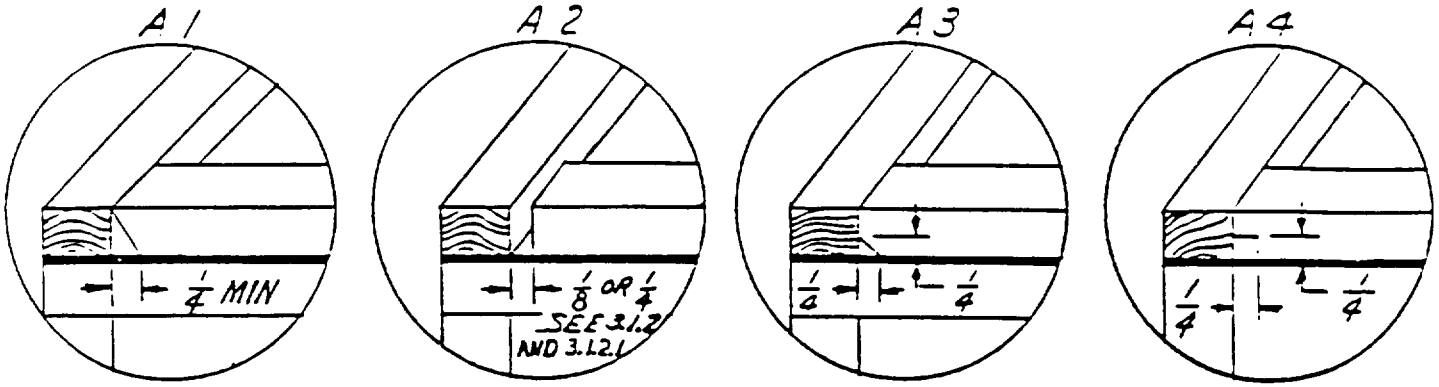

A - ENDS OF FILLER AND INTERMEDIATE CLEATS AND RELATION TO THROUGH EDGE CLEATS

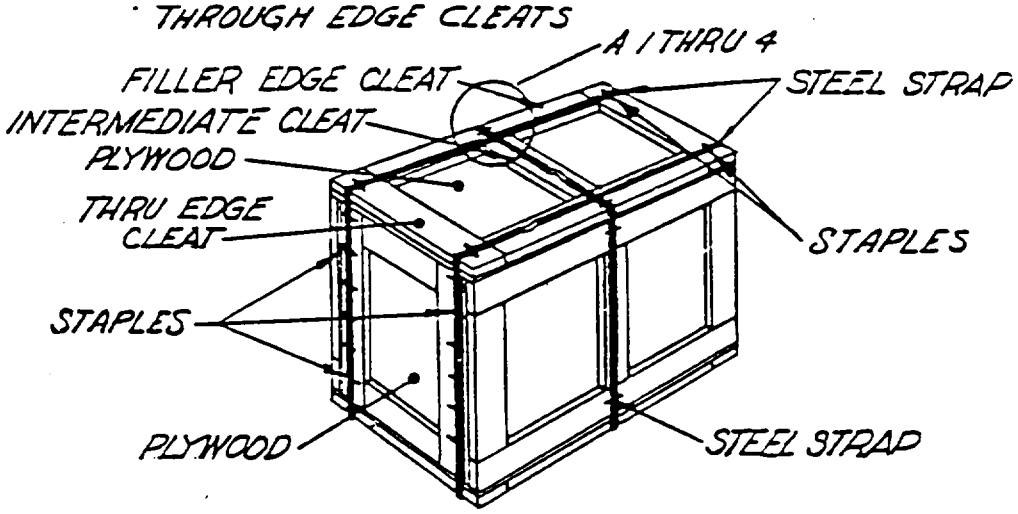

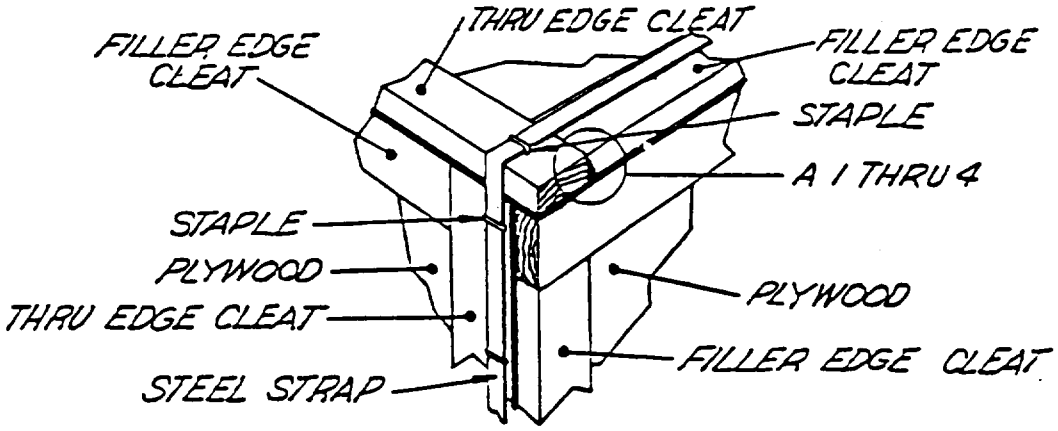

FIG 4 — STYLE A

10-1-185

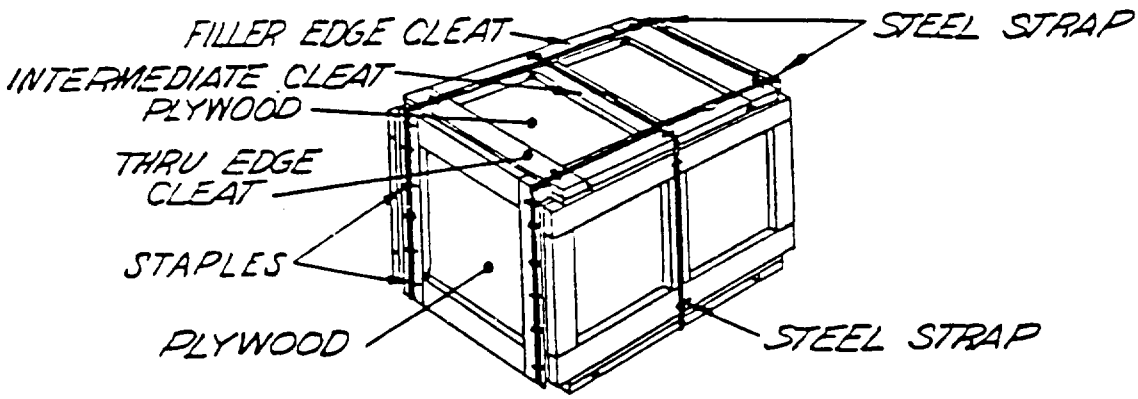

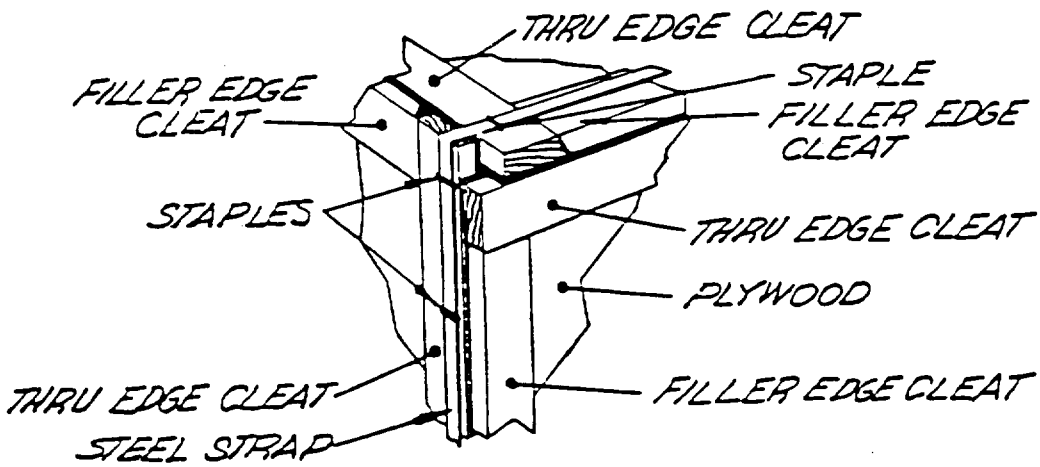

FIG 5— STYLE B
10-1-186

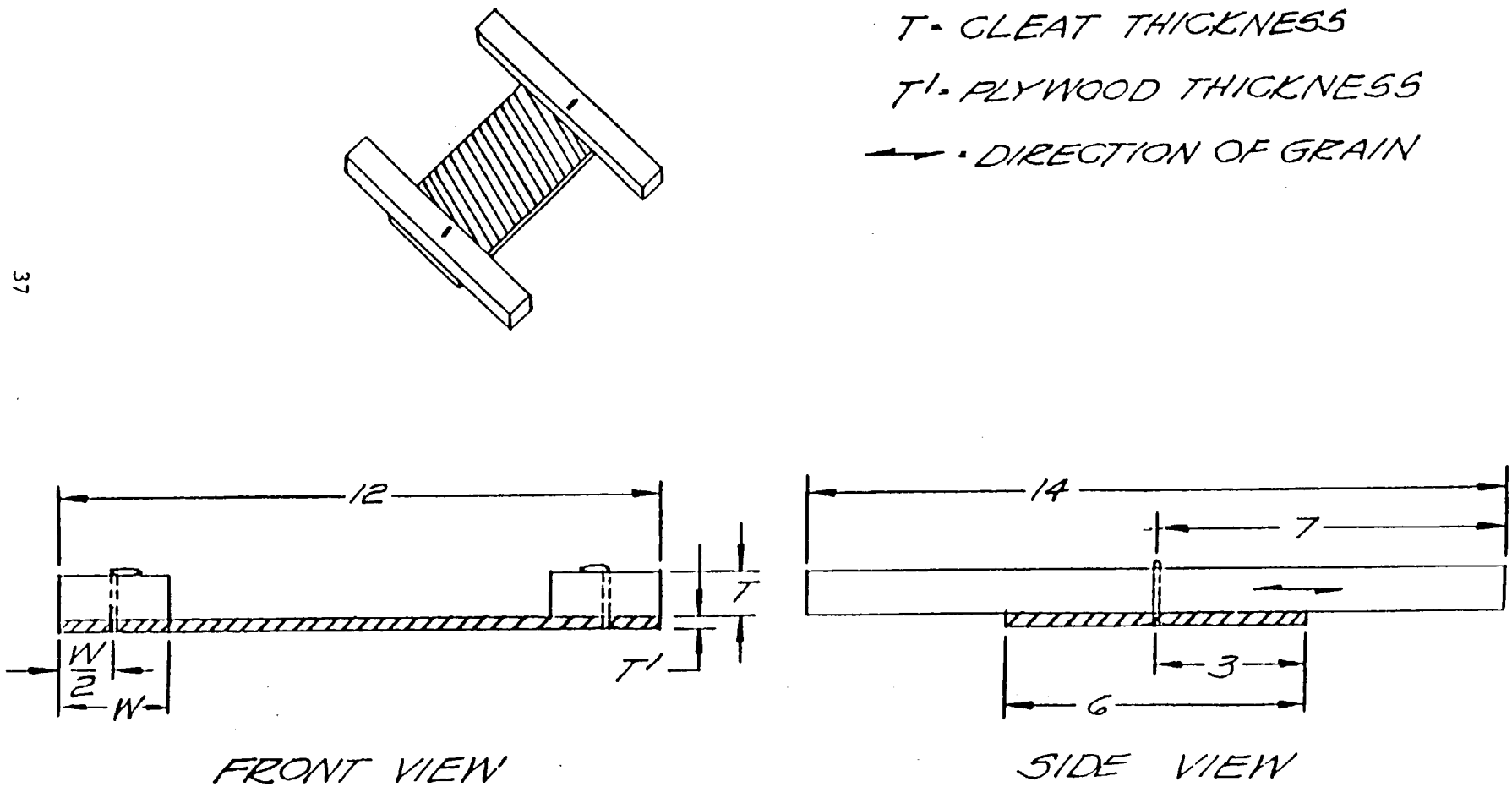

FIGURE 6 TEST SPECIMEN FOR DIRECT WITHDRAWAL RESISTANCE TEST (FOR PANEL ASSEMBLY)

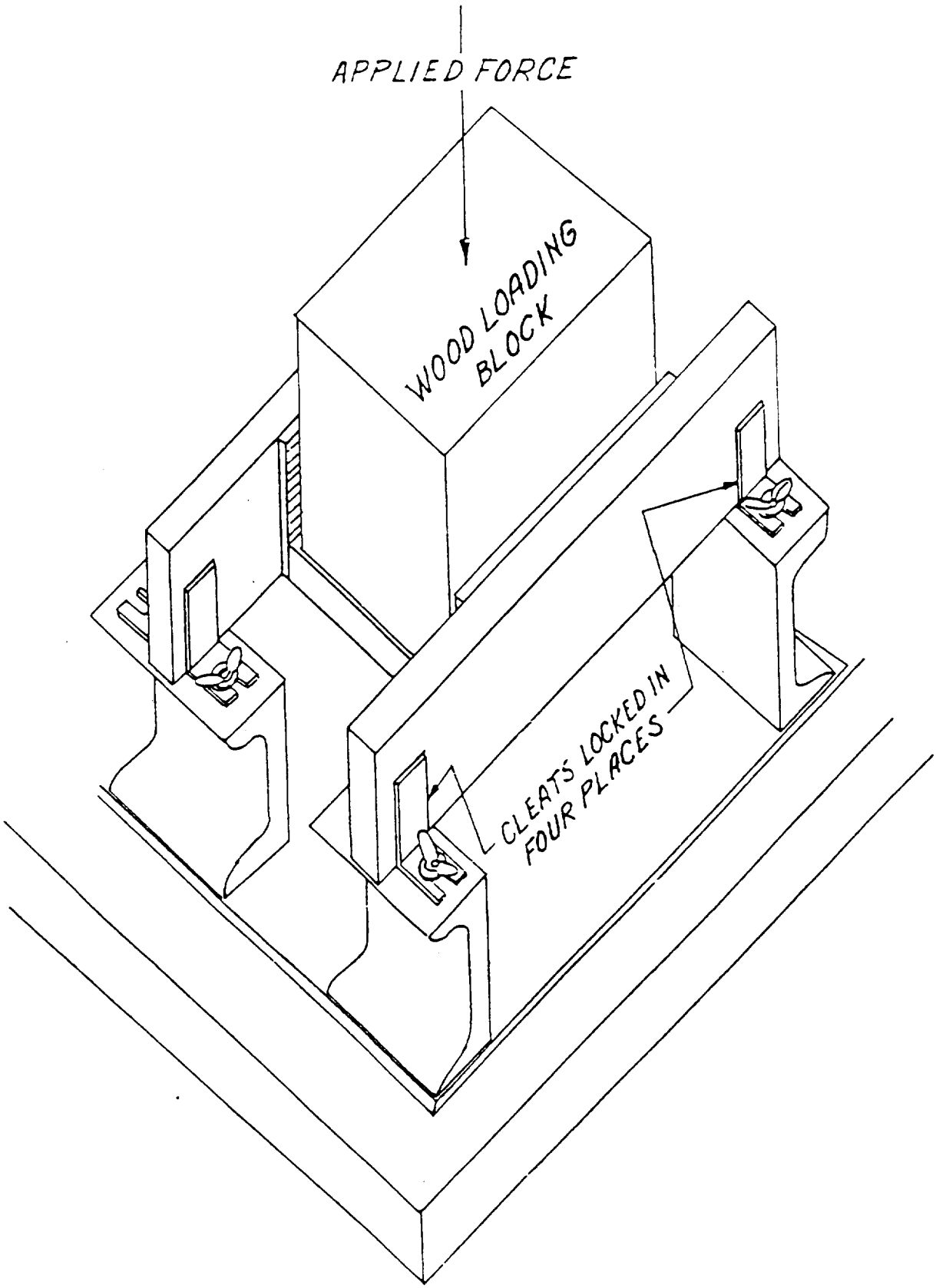

FIGURE 7 TEST FIXTURE
FOR DIRECT WITHDRAWAL RESISTANCE TEST (FOR PANEL ASSEMBLY)
AND LATERAL RESISTANCE TEST (FOR CONTAINER ASSEMBLY)

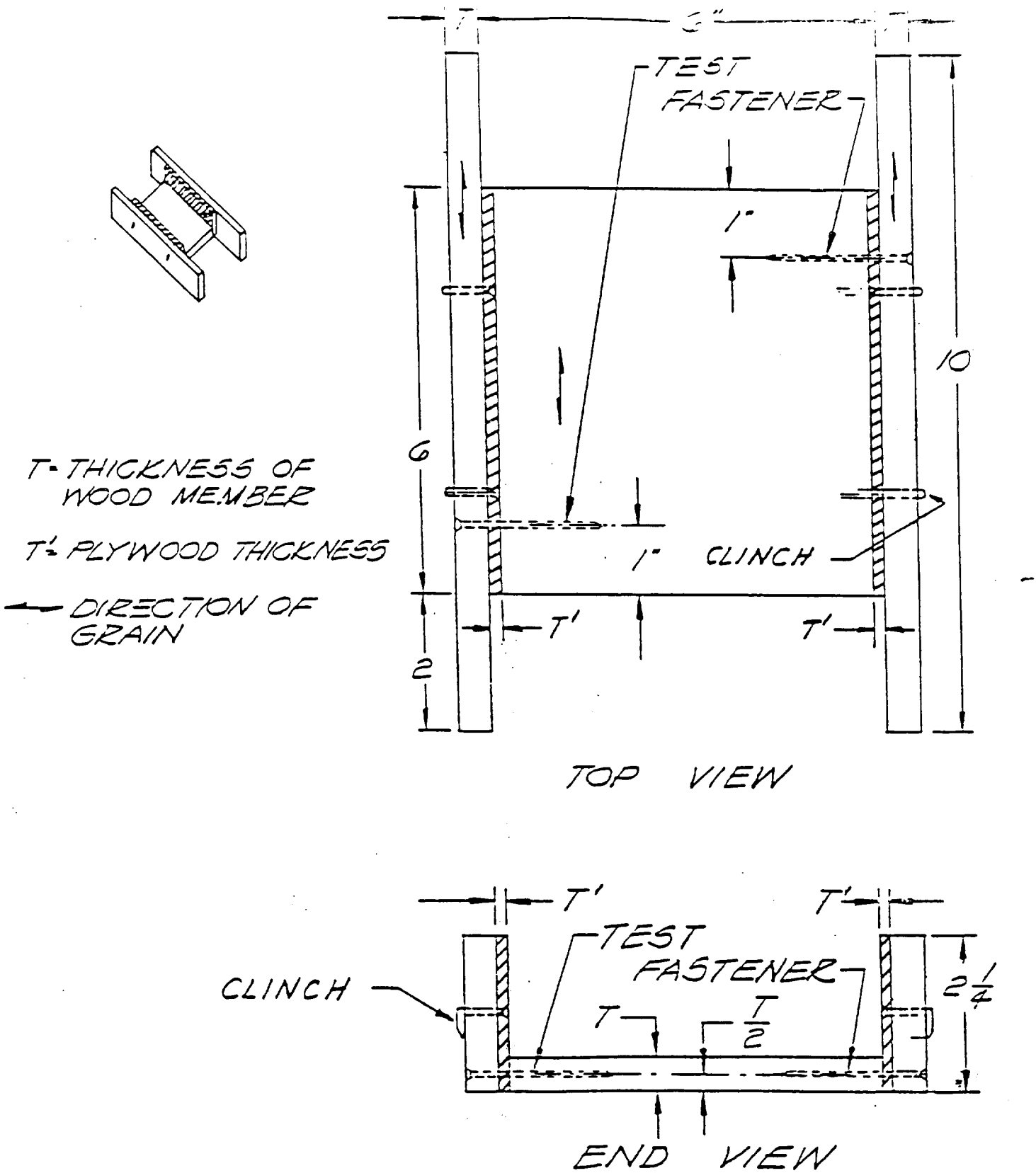

FIGURE 8. TEST SPECIMEN FOR LATERAL RESISTANCE TEST (FOR CONTAINER ASSEMBLY)

T = CLEAT THICKNESS
T' = PLYWOOD THICKNESS
⟶ = DIRECTION OF GRAIN

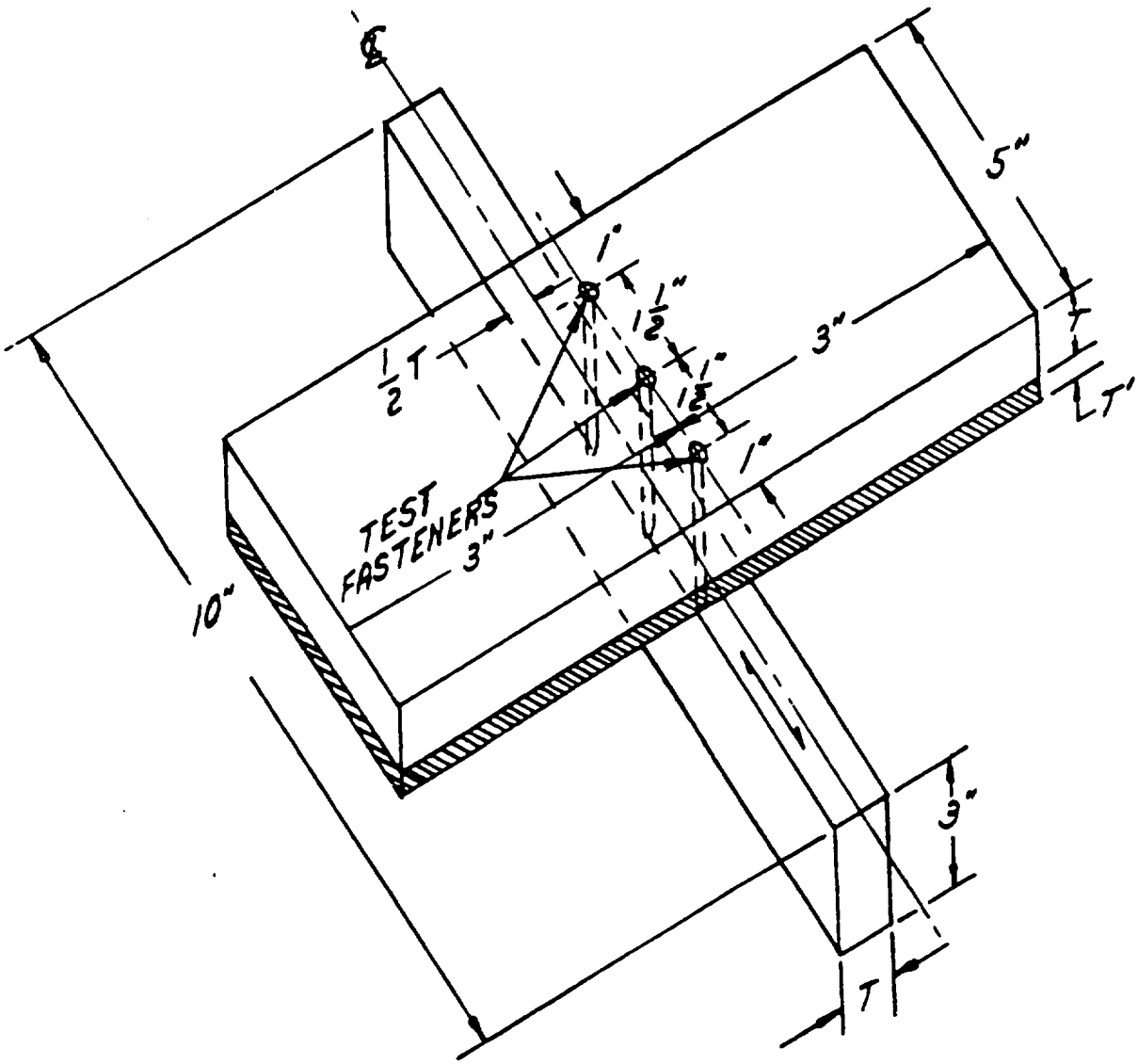

FIGURE 9 TEST SPECIMEN FOR DIRECT WITHDRAWAL RESISTANCE TEST (FOR CONTAINER ASSEMBLY)

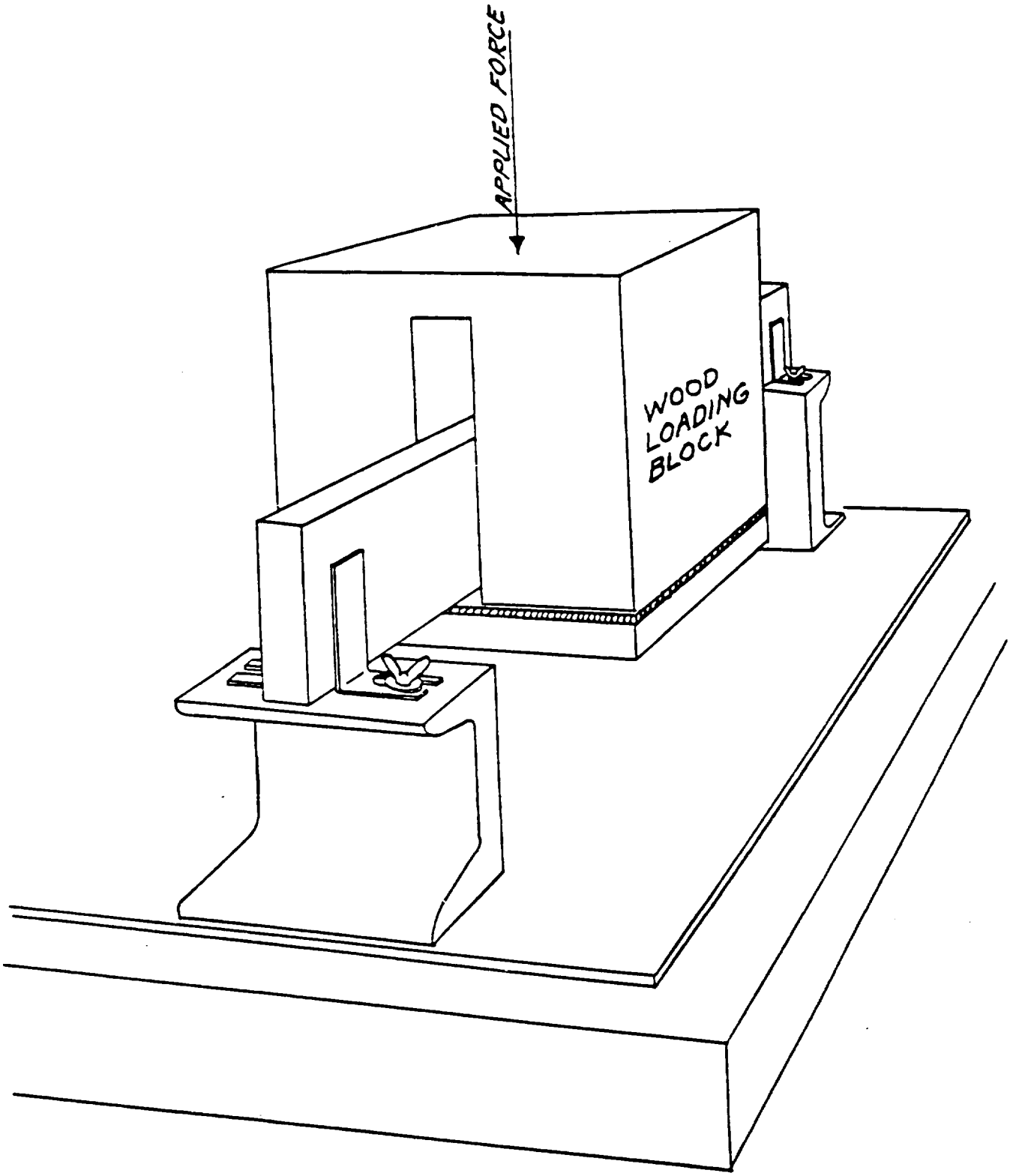

FIGURE 10 TEST FIXTURE
FOR DIRECT WITHDRAWAL RESISTANCE
TEST (FOR CONTAINER ASSEMBLY)

MILITARY INTERESTS:

Custodians

Army - GL
Navy - SA
Air Force - 69

Review activities

Army - ME, AR, SM, MI, EA, MD
Navy - YD
Air Force - 99

User activities

Navy - MC, OS, SH

CIVIL AGENCY COORDINATING ACTIVITIES:

GSA-FSS
USDA-APS

PREPARING ACTIVITY:

Army - GL

Project No. 8115-0502

INSTRUCTIONS: In a continuing effort to make our standardization documents better, the DoD provides this form for use in submitting comments and suggestions for improvements. All users of military standardization documents are invited to provide suggestions. This form may be detached, folded along the lines indicated, taped along the loose edge *(DO NOT STAPLE)*, and mailed. In block 5, be as specific as possible about particular problem areas such as wording which required interpretation, was too rigid, restrictive, loose, ambiguous, or was incompatible, and give proposed wording changes which would alleviate the problems. Enter in block 6 any remarks not related to a specific paragraph of the document. If block 7 is filled out, an acknowledgement will be mailed to you within 30 days to let you know that your comments were received and are being considered.

NOTE: This form may not be used to request copies of documents, nor to request waivers, deviations, or clarification of specification requirements on current contracts. Comments submitted on this form do not constitute or imply authorization to waive any portion of the referenced document(s) or to amend contractual requirements.

(Fold along this line)

(Fold along this line)

DEPARTMENT OF THE ARMY

U.S. ARMY NATICK RESEARCH, DEVELOPMENT
and ENGINEERING CENTER
ATTN: STRNC-ES
Natick, MA 01760-5014

OFFICIAL BUSINESS
PENALTY FOR PRIVATE USE $300

NO POSTAGE NECESSARY IF MAILED IN THE UNITED STATES

BUSINESS REPLY MAIL
FIRST CLASS PERMIT NO. 12062 WASHINGTON D. C.
POSTAGE WILL BE PAID BY THE DEPARTMENT OF THE ARMY

Commander
U.S. Army Natick Research, Development
and Engineering Center
ATTN: STRNC-ES
Natick, MA 01760-5014

STANDARDIZATION DOCUMENT IMPROVEMENT PROPOSAL

(See Instructions – Reverse Side)

1. DOCUMENT NUMBER	2. DOCUMENT TITLE
PPP-B-601H	Boxes, Wood, Cleated-Plywood

3a. NAME OF SUBMITTING ORGANIZATION	4. TYPE OF ORGANIZATION *(Mark one)*
	☐ VENDOR
	☐ USER
b. ADDRESS *(Street, City, State, ZIP Code)*	☐ MANUFACTURER
	☐ OTHER *(Specify)*: _____

5. PROBLEM AREAS

a. Paragraph Number and Wording:

b. Recommended Wording:

c. Reason/Rationale for Recommendation:

6. REMARKS

7a. NAME OF SUBMITTER *(Last, First, MI)* – Optional	b. WORK TELEPHONE NUMBER *(Include Area Code)* – Optional
c. MAILING ADDRESS *(Street, City, State, ZIP Code)* – Optional	8. DATE OF SUBMISSION *(YYMMDD)*

DD FORM 1426, 83 MAR — PREVIOUS EDITION IS OBSOLETE. NATICK OR 1 Feb 86