INCH-POUND
MIL-W-16878F(NAVY)
11 September 1992
SUPERSEDING
MIL-W-16878E(NAVY)
10 August 1951
(See 6.9)

MILITARY SPECIFICATION

WIRE, ELECTRICAL, INSULATED, GENERAL SPECIFICATION FOR

This specification is approved for use by the Department of the Navy and is available for use by all Departments and Agencies of the Department of Defense.

1. SCOPE

1.1 Scope. This specification covers unshielded wire for hookup and lead wiring of electrical and electronic components and equipment so that minimum size and weight are consistent with service requirements. The temperature rating of wire included in this specification ranges to a maximum of 260 degrees Celsius (°C), with potential rating from 250 to 5000 volts root mean square (Vrms).

1.2 Classification. Wire is of the following conductor material, size, stranding, and insulation color code, as specified (see 3.1 and 6.2).

1.2.1 Military part number. Part numberbs shall be of the following form, as specified (see 6.2.1):

M16878/15	B	C	B	*
(see 1.2.2)	(see 1.2.3)	(see 1.2.4)	(see 1.2.5)	(see 1.2.6)

1.2.2 Military specification sheet number. The Military specification sheet number designation consists of a prefix M which indicates a military specification item, the specification number and the specification sheet number.

Beneficial comments (recommendations, additions, deletions) and any pertinent data which may be of use in improving this document should be addressed to: Commander, Naval Sea Systems Command, SEA 55Z3, Department of the Navy, Washington, DC 20362-5101 by using the self-addressed Standardization Document Improvement Proposal (DD Form 1426) appearing at the end of this document or by letter.

AMSC N/A FSC 6145
DISTRIBUTION STATEMENT A. Approved for public release; distribution is unlimited.

1.2.3 Conductor material. Conductor material is as specified (see 2.1), with the conductor material designated by a single letter specified as follows:

B - Coated copper.
C - Coated copper-clad steel (C.C. Steel).
D - Coated high-strength copper alloy (H.S.C.A.).
E - Coated copper with overall metallic coating.

1.2.4 Conductor size. The conductor's American Wire Gage (AWG) size is designated by a single letter specified as follows:

AWG	Letter	AWG	Letter	AWG	Letter	AWG	Letter
32	A	20	G	8	N	00	W
30	B	18	H	6	P	000	Y
28	C	16	J	4	R	0000	Z
26	D	14	K	2	S		
24	E	12	L	1	T		
22	F	10	M	0	U		

AWG for solid conductor is standard AWG; stranded wire is to the closest even-numbered AWG with normal stranding (7, 19, 37, and so forth) (see 6.1.2).

1.2.5 Conductor stranding. The number of strands making up the conductor is designated by a letter specified as follows:

Number of strands	Letter	Number of strands	Letter
1	A	133	L
7	B	168	M
10	C	259	N
16	D	665	P
19	E	817	R
26	F	1045	S
37	G	1330	T
41	H	1672	V
65	J	2109	W
105	K		

1.2.6 Insulation color code. The insulation color code is in accordance with the identification coding system of MIL-STD-681, and may be 1, 2, or 3 digits depending on the number or absence of strips or bands. The first number is the color of the insulation, the second number represents the color of the first strip or band, the third number, the color of the second strip or band. Designation of the color code need not be imprinted on the wire. The colors and their corresponding number are as follows:

COLOR CODE CHART

Color	Number Designator	Color	Number Designator
Black	0	Green	5
Brown	1	Blue	6
Red	2	Violet (purple)	7
Orange	3	Gray (slate)	8
Yellow	4	White	9

The colors listed are the preferred colors in accordance with FED-STD-595 unless the contracting activity specifies alternates (see 6.2).

2. APPLICABLE DOCUMENTS

2.1 Government documents.

2.1.1 Specifications, standards, and handbooks. The following specifications, standards, and handbooks form a part of this document to the extent specified herein. Unless otherwise specified, the issues of these documents are those listed in the issue of the Department of Defense Index of Specifications and Standards (DODISS) and supplement thereto, cited in the solicitation (see 6.2).

SPECIFICATIONS

FEDERAL

QQ-S-571 - Solder, Tin Alloy: Tin-Lead Alloy; and Lead Alloy.
ZZ-R-765 - Rubber, Silicone (General Specification).
PPP-F-320 - Fiberboard; Corrugated and Solid, Sheet Stock (Container Grade), and Cut Shapes.

MILITARY

MIL-C-572 - Cords, Yarns and Monofilaments Organic Synthetic Fiber.
MIL-E-917 - Electrical Power Equipment; Basic Requirements (Naval Shipboard Use).
MIL-Y-1140 - Yarn, Cord, Sleeving, Cloth, and Tape-Glass.
MIL-C-12000 - Cable, Cord, and Wire, Electric; Packaging of.
MIL-L-19140 - Lumber and Plywood, Fire-Retardant Treated.

STANDARDS

FEDERAL

FED-STD-228 - Cable and Wire, Insulated; Methods of Testing.
FED-STD-595 - Colors Used in Government Procurement.

MILITARY

MIL-STD-104 - Limits for Electrical Insulation Color.
MIL-STD-105 - Sampling Procedures and Tables for Inspection by Attributes.
MIL-STD-454 - Standard General Requirements for Electronic Equipment.

MIL-STD-681 - Identification Coding and Application of Hookup and Lead Wire.

(Unless otherwise indicated, copies of federal and military specifications, standards, and handbooks are available from the Standardization Documents Order Desk, BLDG. 4D, 700 Robbins Avenue, Philadelphia, PA 19111-5094.)

2.2 Non-Government publications. The following document(s) form a part of this document to the extent specified herein. Unless otherwise specified, the issues of the documents which are DOD adopted are those listed in the issue of the DODISS cited in the solicitation. Unless otherwise specified, the issues of documents not listed in the DODISS are the issues of the documents cited in the solicitation (see 6.2).

AMERICAN NATIONAL STANDARDS INSTITUTE (ANSI)

B46.1 - Surface Texture (Surface Roughness, Waviness, and Lay). (DoD adopted)

(Application for copies should be addressed to the American National Standards Institute, 1430 Broadway, New York, NY 10018.)

AMERICAN SOCIETY FOR TESTING AND MATERIALS (ASTM)

B 33 - Standard Specification for Tinned Soft or Annealed Copper Wire for Electrical Purposes. (DoD adopted)

B 173 - Standard Specification for Rope-Lay-Stranded Copper Conductors Having Concentric-Stranded Members, for Electrical Conductors. (DoD adopted)

B 286 - Standard Specification for Copper Conductors for Use in Hookup wire for Electronic Equipment. (DoD adopted)

B 298 - Standard Specification for Silver-Coated Soft or Annealed Copper Wire. (DoD adopted)

B 355 - Standard Specification for Nickel-Coated Soft or Annealed Copper Wire. (DoD adopted)

B 470 - Standard Specification for Bonded Copper Conductors for Use in Hookup Wire for Electronic Equipment.

B 501 - Standard Specification for Silver-Coated, Copper-Clad Steel Wire for Electronic Application.

B 559 - Standard Specification for Nickel-Coated, Copper-Clad Steel Wire for Electronic Application.

B 624 - Standard Specification for High-Strength, High-Conductivity Copper-Alloy Wire for Electronic Application. (DoD adopted)

D 1248 - Standard Specification for Polyethylene Plastics Molding and Extrusion Materials. (DoD adopted)

D 2116 - Standard Specification for FEP-Fluorocarbon Molding and Extrusion Materials. (DoD adopted)

D 4066 - Standard Specification for Nylon Injection and Extrusion Materials (PA). (DoD adopted)

D 4314 - Standard Specification for General-Purpose, Heavy-Duty, and Extra-Heavy-Duty Crosslinked Chlorosulfonated Polyethylene Jackets for Wire and Cable.

D 4895 - Standard Specification for Polytetrafluoroethylene (PTFE) Resin Produced from Dispersion.

G 21 - Standard Practice for Determining Resistance of Synthetic Polymeric Materials to Fungi. (DoD adopted)

(Application for copies should be addressed to the American Society for Testing and Materials, 1916 Race Street, Philadelphia, PA 19103.)

NATIONAL ELECTRICAL MANUFACTURERS ASSOCIATION (NEMA)
WC 52 - High-Temperature and Electronic Insulated Wire-Impulse Dielectric Testing.

(Application for copies should be addressed to the National Electrical Manufacturers Association, Suite 300, 2101 L Street, NW, Washington, DC 20037.)

SOCIETY OF AUTOMOTIVE ENGINEERS, INC. (SAE)
AMS 3249 - Ethylene Propylene (EPDM) Rubber Hydrazine-Base-Fluid Resistant 75-85. (DoD adopted)

(Application for copies should be addressed to Society of Automotive Engineers, Inc., 400 Commonwealth Drive, Warrendale, PA 15096.)

UNDERWRITERS LABORATORIES, INC. (UL)
1581 - Reference Standard for Electrical Wires, Cables and Flexible Cords.

(Application for copies should be addressed to Underwriters Laboratories Inc., 333 Pfingsten Road, Northbrook, IL 60062.)

INSULATED CABLE ENGINEERS ASSOCIATION, INC.
Publication T-24-380 - Partial Discharge Test Procedure

(Application for copies should be addressed to Insulated Cable Engineers Association, Post Office Box 440, South Yarmouth, MA 02664.)

(Non-Government standards and other publications are normally available from the organizations that prepare or distribute the documents. These documents also may be available in or through libraries or other informational services.)

2.3 Order of precedence. In the event of a conflict between the text of this document and the references cited herein (except for related associated specification sheets), the text of this document takes precedence. Nothing in this document, however, supersedes applicable laws and regulations unless a specific exemption has been obtained.

3. REQUIREMENTS

3.1 Specification sheets. The individual item requirements shall be as specified herein and in accordance with the applicable specification sheet. In the event of any conflict between the requirements of this specification and the specification sheet, the latter shall govern.

3.2 Classification of requirements. The applicable requirements are classified as follows:

Requirement	Paragraph
First article	3.3
Materials	3.4
Construction	3.5
Performance	3.6

3.3 First article. When specified (see 6.2), a sample shall be subjected to first article inspection (see 6.3) in accordance with 4.3.

3.4 Materials. Materials shall be as specified herein. When a material is not specified, a material shall be used which will enable the insulated wire to meet the performance requirements of this specification. Acceptance of any constituent material shall not be construed as a guaranty of the acceptance of the finished product (see 4.5.1).

3.4.1 Conductors. Conductors shall be solid (see 6.1.3) or stranded as specified in table I, or as approved by the contracting activity. Each strand of the conductor shall be of the same composition. When coated wires are used, individual strands shall be coated before stranding. Each strand shall have the same coating. Application of metallic coating shall be permitted after stranding in accordance with ASTM B 470, type II. Conductors shall meet the requirements specified in 3.4.1.1 through 3.4.1.7 before application of insulation.

3.4.1.1 Tin-coated, copper conductors. Tin-coated copper conductors shall be in accordance with ASTM B 33 for soft, annealed copper.

3.4.1.2 Silver-coated, copper conductors. Silver-coated, soft, annealed copper conductors shall be in accordance with ASTM B 298 with 40 microinches (minimum) thickness of silver.

3.4.1.3 Nickel-coated, copper conductors. Nickel-coated, soft, annealed copper conductors shall be in accordance with ASTM B 355 and shall be coated with 50 microinches (minimum) thickness of commercially pure nickel.

3.4.1.4 Silver-coated, copper-clad, steel conductors. Silver-coated, copper-clad steel conductors shall be in accordance with class 40A of ASTM B 501 with 40 microinches (minimum) thickness of silver.

3.4.1.5 Nickel-coated, copper-clad, steel conductors. Nickel-coated, copper-clad steel conductors shall be in accordance with ASTM B 559 with 50 microinches (minimum) thicjness of commercial nickel.

3.4.1.6 High-strength, copper alloy conductors. High-strength, copper alloy conductors shall be in accordance with ASTM B 624 and table I. The strands shall be silver- or nickel-coated in accordance with 3.4.1.2 or 3.4.1.3 as applicable.

TABLE I. Details of conductors.

Size designation (see 1.2.1.3)	Nominal conductor area (circular mils) 1/	Stranding (no. of strands X AWG of strands)	Allowable no. of missing strands (maximum)	Nominal diameter of individual strands (inch) 1/	Diameter of conductor		Maximum direct current (dc) resistance of finished wire (ohms/1000 feet at 20°C)						Breaking strength of alloy conductor (pounds, (minimum)
							Soft or annealed copper			High-strength copper alloy 3/			
					Min (inch)	Max (inch)	Silver-coated	Nickel-coated	Tin-coated	Silver-coated	Nickel-coated	Copper-covered steel	
32	64	2/ 1 X 32	0	0.0080	0.0075	0.009	169	175	178	200	205	451	
32	67	7 X 40	0	.0031	.0088	.011	173	185	189	204	232	483	
30	100	2/ 1 X 30	0	.0100	.0095	.011	108	112	116	127	132	283	
30	112	2/ 7 X 38	0	.0040	.011	.013	100.7	110.7	114.1	117.4	129.6	285	5.17
28	159	1 X 28	0	.0126	.012	.013	68.0	70.0	71.6	80.0	82.0	184	
28	175	2/ 7 X 36	0	.0050	.014	.016	63.8	67.9	68.6	74.4	79.0	178	8.16
26	253	1 X 26	0	.0159	.015	.017	42.7	43.8	45.3	50.2	51.5	116	
26	278	7 X 34	0	.0063	.018	.020	40.5	43.1	43.4	47.6	50.7	110	11.6
26	304	2/19 X 38	0	.0040	.018	.022	38.4	42.2	41.3	44.8	49.4	107	14.2
24	404	1 X 24	0	.0201	.019	.022	26.8	27.4	27.8	31.4	31.9	71.4	
24	448	7 X 32	0	.0080	.023	.025	25.2	26.5	27.0	29.4	30.8	67.6	18.9
24	475	2/19 X 36	0	.0050	.023	.027	24.3	25.9	26.2	28.4	30.1	65.6	22.4
22	640	1 X 22	0	.0253	.0247	.026	17.0	18.1	17.7	19.6	19.9	44.4	
22	700	7 X 30	0	.0100	.028	.031	15.9	16.6	17.1	18.7	19.5	42.1	
22	754	2/19 X 34	0	.0063	.029	.033	15.1	16.0	16.2	17.5	18.6	40.8	35.8
20	1020	1 X 20	0	.0320	.031	.033	10.5	10.7	10.9	12.2	12.6		
20	1111	7 X 28	0	.0126	.036	.039	10.0	10.4	10.7	11.8	12.2		
20	1000	10 X 30	0	.0100	.038	.040	11.3	11.8	12.1				
20	1216	2/19 X 32	0	.0080	.037	.041	9.19	9.77	9.88	10.8	11.4		58.1
18	1620	1 X 18	0	.0403	.039	.041	6.60	6.70	6.90				
18	1770	7 X 26	0	.0159	.047	.050	6.28	6.50	6.70				
18	1608	16 X 30	0	.0100	.048	.051	6.30	6.60	6.80				
18	1900	2/19 X 30	0	.0100	.046	.052	5.79	6.10	6.23				
16	2580	1 X 16	0	.0508	.050	.052	4.20	4.35	4.36				

See footnotes at end of table.

TABLE I. Details of conductors - Continued.

Size designation (see 1.2.1.3)	Nominal conductor area (circular mils) 1/	Stranding (no. of strands X AWG of strands)	Allowable no. of missing strands (maximum)	Nominal diameter of individual strands (inch) 1/	Diameter of conductor		Maximum direct current (dc) resistance of finished wire (ohms/1000 feet at 20°C)						Breaking strength of alloy conductor (pounds, (minimum)
							Soft or annealed copper			High-strength copper alloy 3/			
					Min (inch)	Max (inch)	Silver-coated	Nickel-coated	Tin-coated	Silver-coated	Nickel-coated	Copper-covered steel	
16	2426	2/ 19 X 29	0	0.0113	0.052	0.059	4.52	4.76	4.81				
16	2600	26 X 30	0	.0100	.057	.062	4.31	4.55	4.69				
14	4110	1 X 14	0	.0641	.063	.065	2.58	2.67	2.68				
14	3831	2/ 19 X 27	0	.0142	.065	.073	2.88	3.00	3.06				
14	4100	41 X 30	0	.0100	.072	.081	2.74	2.85	2.94				
12	6530	1 X 12	0	.0808	.079	.082	1.62	1.68	1.69				
12	6088	19 X 25	0	.0179	.082	.093	1.81	1.88	1.92				
12	5874	2/ 37 X 28	0	.0126	.084	.091	1.90	1.98	2.02				
12	6500	65 X 30	0	.0100	.093	.099	1.73	1.80	1.85				
10	10380	1 X 10	0	.1019	.100	.103	1.02	1.05	1.06				
10	9354	2/ 37 X 26	0	.0159	.106	.115	1.19	1.24	1.26				
10	10500	105 X 30	0	.0100	.118	.130	1.07	1.11	1.15				
8	16800	168 X 30	0	.0100	.160	.175			0.708				
8	16983	2/133 X 29	0	.0113	.158	.173	0.658	0.694	.701				
6	26818	133 X 27	0	.0142	.198	.217	.418	.436	.445				
4	42615	133 X 25	0	.0179	.250	.274	.264	.275	.280				
2	66140	133 X 23	0	.0223	.330	.355	.167	.171	.176				
2	66304	259 X 26	0	.0159	.325	.350	.174	.180	.186				
2	66500	2/665 X 30	2	.0100	.320	.342	.170	.177	.183				
1	83916	259 X 25	0	.0179	.370	.398	.123	.129	.144				
1	81700	817 X 30	2	.0100	.360	.382	.139	.144	.149				
0	105682	259 X 24	0	.0202	.415	.444	.103	.108	.113				

See footnotes at end of table.

TABLE I. Details of conductors - Continued.

Size designation (see 1.2.1.3)	Nominal conductor area (circular mils) 1/	Stranding (no. of strands X AWG of strands)	Allowable no. of missing strands (maximum)	Nominal diameter of individual strands (inch) 1/	Diameter of conductor		Maximum direct current (dc) resistance of finshed wire (ohms/1000 feet at 20°C)						Breaking strength of alloy conductor (pounds, minimum)
							Soft or annealed copper			High-strength copper alloy 3/			
					Min (inch)	Max (inch)	Silver-coated	Nickel-coated	Tin-coated	Silver-coated	Nickel-coated	Copper-covered steel	
0	104500	2/1045 X 30	3	0.0100	0.405	0.431	0.108	0.113	0.116				
00	133460	259 X 23	0	.0227	.467	.492	.084	.088	.090				
00	133000	2/1330 X 30	3	.0100	.450	.486	.085	.089	.091				
000	167096	259 X 22	0	.0255	.525	.560	.069	.072	.072				
000	167200	2/1672 X 30	4	.0100	.518	.545	.068	.071	.071				
0000	211851	259 X 21	0	.0286	.590	.620	.053	.055	.055				
0000	210900	2/2109 X 30	5	.0100	.580	.635	.054	.056	.056				

1/ Nominal values are for information only. Nominal values are not requirements.
2/ Preferred stranding for the associated AWG size.
3/ No high-strength copper alloy conductors above size No. 20.

3.4.1.7 Coated copper with overall metallic coating. Coated copper conductors in which wires in the strands are metallically bonded together by the application of overall tin or alloy coating. Coating prevents strand fraying and shall be in accordance with ASTM B 470, Type II

3.4.2 Insulation and jacket materials. Materials shall be as specified in 3.4.2.1 through 3.4.2.8 as applicable (see 3.1).

3.4.2.1 Polyvinyl chloride (PVC). When specified (see 3.1), the insulation shall be PVC or its copolymer polyvinyl acetate, which conforms to the requirements of the applicable specification sheet.

3.4.2.2 Polyamide (nylon). When specified (see 3.1), polyamide shall be in accordance with ASTM D 4066 or when used in braid shall be in accordance with type P of MIL-C-572.

3.4.2.3 Fluorinated ethylene propylene (FEP). When specified (see 3.1), FEP shall be in accordance with ASTM D 2116.

3.4.2.4 Polytetrafluoroethylene (PTFE). When specified (see 3.1), PTFE shall be in accordance with ASTM D 4895.

3.4.2.5 Polyethylene. When specified (see 3.1), polyethylene shall be in accordance with type II of ASTM D 1248, except colored material can be used.

3.4.2.6 Silicone rubber. When specified (see 3.1), silicone rubber shall be in accordance with class 2a, grade 25, 40, or 50 of ZZ-R-765.

3.4.2.7 Chlorosulfonated polyethylene (CSPE). When specified (see 3.1), CSPE shall be in accordance with ASTM D 4314.

3.4.2.8 Ethylene-propylene diene elastomer (EPDM). When specified (see 3.1), EPDM shall be in accordance with SAE AMS 3249.

3.4.2.9 Crosslinked material. Additional materials shall be acceptable for changing the above materials if the crosslinked final product meets the requirements of the applicable specification sheet (see 3.1).

3.4.2.10 Other material. When other materials are specified, they shall be certified virgin materials containing no additives, except those required as wetting agents, pigmentations for color, and lubricants used in extrusion.

3.4.3 Braid. When specified (see 3.1), braids shall be synthetic textile in accordance with type P of MIL-C-572, or glass yarn in accordance with MIL-Y-1140, as specified (see 6.2).

3.5 Construction.

3.5.1 Conductors. Stranding shall be as specified in table I after insulation. The conductors shall be round in shape, uniform in cross section and free from flaws, scales and other imperfections. Unless otherwise specified (see 6.2), the method of stranding for AWG sizes No. 32 (single conductor) through No.

10 (105 stranding) inclusive, shall be at the option of the contractor. Rope lay stranding only shall be used for AWG sizes No. 8 (133 stranding) and larger. Length of lay of finished, stranded conductors shall be in accordance with ASTM B 286 or ASTM B 173, as applicable.

3.5.2 Insulation. A tight-fitting, continuous coating of insulation shall be added over the conductor and shall be cured, processed, or maintained to provide for accurate centering of the conductor (see 3.6.6). The insulation shall be free from splinters, blisters and other non-homogeneities visible to the normal eye. The insulation shall be constructed to be readily stripped from the conductor so that the conductor is clean for soldering or crimping. A clean conductor shall have no particles of insulation visible to the naked eye.

3.5.3 Braid. When specified (see 3.1), a closely woven braid shall be applied over the insulation. Braids shall be saturated or filled and coated with fungus-, heat-, flame- and moisture-resistant lacquers to a smooth finish which shall minimize fraying at the cut ends under conditions incident to handling while being installed and during normal service. Coatings shall be sufficiently translucent so as not to impair the visibility of any underlying color code of the braid materials when strips are specified. Color carriers used in braids shall be one carrier (minimum) revolving in the same direction and shall be composed of synthetic textile or glass yarn (see 3.4.3). The braid shall not increase the outside diameter of the finished wire by more than the maximum amount specified in table II.

TABLE II. Outside diameter thickness increase.

Diameter over insulation (inch)	Diameter increase (inch, maximum)
0.125 or less	0.015
0.126 - 0.250	0.020
Greater than 0.250	0.035

3.5.4 Jacket. When specified (see 3.1), a jacket shall be extruded over the insulation.

3.5.5 Colors. Colors shall be in accordance with MIL-STD-104, class I, except pastel colors shall be acceptable when crosslinking is done by irradiation. When insulation surfaces have been color coded with inks or dyes, they shall be nonconductive, permanently fast and shall not change, fade, run, or bleed when used in direct sunlight and within the specific temperature rating of the insulation used.

3.5.5.1 Lay of stripes. When specified (see 3.1), the length of lay of colored stripes shall be as specified in table III.

TABLE III. Length of lay of stripes.

Diameter over finished wire (inch)	Length of lay (inches, maximum)
0.000 to 0.083	1.00
0.084 to 0.110	1.50
0.111 and larger	2.00

3.5.6 Splices. Splices shall not be made in a stranded conductor as a whole; however, individual strands and solid conductors may be spliced. Splices shall be made by electro welding or brazing with silver composition solder in accordance with QQ-S-571.

3.6 Performance. Unless otherwise specified herein, all requirements (see 3.6.1 through 3.6.16) shall be met on finished wire.

3.6.1 Insulation flaws. After application of the primary insulation, the wire shall withstand the spark test or impulse dielectric test voltage as specified (see 3.1) without breakdown. After applications of braids or jackets, the finished wire shall withstand the spark test or the impulse dielectric test without breakdown (see 4.5.2.1 and 4.5.2.2).

3.6.2 Dielectric withstanding voltage. The wire shall withstand the specified voltage for 1 minute (minimum) without breakdown (see 3.1 and 4.5.3).

3.6.3 Insulation resistance. The insulation resistance shall be not less than the value specified (see 3.1 and 4.5.4).

3.6.4 Conductor resistance. The conductor resistance of the finished wire shall be not greater than the value specified (see 3.4.1 and 4.5.5).

3.6.5 Cold bend. Specimens shall reveal no readily visible cracks in the insulation and shall pass the dielectric withstanding voltage requirements as specified (see 3.6.2 and 4.5.6).

3.6.6 Concentricity. The concentricity of finished wire insulation and the primary insulation of multi-layered insulation or jacket, shall be 70 percent (minimum). The failure of the concentricity of any cross-section shall constitute failure for the entire specimen (see 4.5.7).

3.6.7 Surface resistance (wire with outer braid only). The surface resistance shall be 5 megohm-inches (minimum). A surface resistance of less than 1000 megohm-inches shall not change by more than 50 percent from the initial measured value after the application of the high potential and remeasurement of surface resistance (see 3.1 and 4.5.8).

3.6.8 Wrap back test (PTFE insulation only). Specimens shall reveal no cracks when visually examined and shall pass the dielectric withstanding voltage requirements as specified (see 3.6.2 and 4.5.9).

3.6.9 Heat resistance. Specimens shall reveal no cracking or delamination of the insulation (and jacket when applicable), no exudation of the insulation through the braid in constructions incorporating braids, no readily visible defects in any of the wire component parts (slight discoloration after aging is considered normal and acceptable) and shall pass the dielectric withstanding voltage requirements as specified (see 3.6.2 and 4.5.10).

3.6.10 Flammability. Insulation shall not burn for more than the specified time and the flame shall not travel more than the specified distance nor release flaming particles that ignite combustible materials in its vicinity (see 3.1 and 4.5.11).

3.6.11 Shrinkage. Insulation shall not flare away from the conductor nor open up over the bent portion, nor shrink back more than 0.125 inch (see 4.5.12).

3.6.12 Heat aging. Insulation elongation and tensile strength shall not change more than specified (see 3.1 and 4.5.13).

3.6.13 Insulation tensile strength. The minimum tensile strength of insulation shall be as specified (see 3.1 and 4.5.14).

3.6.14 Insulation elongation. The minimum elongation of insulation shall be as specified (see 3.1 and 4.5.15).

3.6.15 Marking and stripe durability. A minimum of 125 cycles of the mandrel shall not remove the printed marking or color code stripe from the wire sample (see 4.5.16).

3.6.16 Fungus resistance. All nonmetallic materials, including compounded materials, that are not fungus-inert in accordance with MIL-STD-454 shall be fungus resistant as specified (see 3.1 and 4.5.17).

3.6.17 Insulation circumferential elongation (PTFE extruded insulation only. The circumferential elongation for PTFE extruded insulation shall not be less than the average percent for conductor size of Table IV (see 4.4.3.1.3 and 4.5.19).

TABLE IV. Minimum circumferential elongation

Conductor size	Percent (Average)
28 to 16	200
14 to 12	150
10 to 8	100

3.6.18 Partial discharge test. Test shall be made prior to the ac and dc voltage tests on the lead wire. The applied voltage shall be raised to a value equal to 20 percent greater than the minimum partial-discharge extinction level but shall not exceed the required ac test voltage for the lead wire. This test shall be as specified in 4.5.20.

3.7 Identification of product. Unless otherwise specified (see 3.1 and 6.2), finished wire shall be identified by a printed marking applied to the outer surface of the wire or visible through the outer surface. The printed identification shall be at intervals of 9 to 60 inches measured from the beginning of one complete marking to the beginning of the succeeding complete marking and shall consist of the following:

(a) M16878/* (* applicable specification sheet).
(b) Conductor material as identified per PIN number.
(c) Conductor size as identified per PIN number.
(d) Voltage rating
(e) Manufacturer's supply code designation.

Printing shall be of a contrasting color (black or white is preferable) in a permanent ink or dye. Identification printing shall be applied with the vertical axis of the printed characters either crosswise or lengthwise on the wire when the nominal diameter of the wire is greater than 0.050 inch. Identification printing shall be applied with the vertical axis of the printed characters lengthwise on the wire when the nominal diameter of the finished wire is 0.050 inch or smaller. Printed characters shall be complete and legible to the naked eye.

3.8 Workmanship. Wire shall be free of kinks, abrasions, and cracked or peeled surfaces. Wire shall be a uniform and consistent product and shall be free from defects which will adversely affect the serviceability of the product.

3.9 Toxicity. Materials specified herein for the construction of the insulated wire shall be selected to provide maximum resistance to burning. The combustion of these materials shall not create a concentration of toxic gases that exceed maximum concentration levels specified in MIL-E-917, table I (see 3.6.10, 4.5.11 and 4.5.18).

With respect to toxicity levels of wire inspected to this specification, it is the Government's intent to accumulate data from the testing of first article samples. This data will be compiled and evaluated to establish appropriate concentration levels of toxic gases for future acceptable maximum concentration levels. Contractors are requested to provide such data with repect to their products following first article testing. This data will not be used for the rejection of any product first article testing.

4. QUALITY ASSURANCE PROVISIONS

4.1 Responsibility for inspection. Unless otherwise specified in the contract or purchase order, the contractor is responsible for the performance of all inspection requirements (examinations and tests) as specified herein. Except as otherwise specified in the contract or purchase order, the contractor may use his own or any other facilities suitable for the performance of the inspection requirements specified herein, unless disapproved by the Government. The Government reserves the right to perform any of the inspections set forth in this specification where such inspections are deemed necessary to ensure supplies and services conform to prescribed requirements.

4.1.1 Responsibility for compliance. All items shall meet all requirements of sections 3 and 5. The inspection set forth in this specification shall become a part of the contractor's overall inspection system or quality program. The absence of any inspection requirements in the specification shall not relieve the contractor of the responsibility of ensuring that all products or supplies submitted to the Government for acceptance comply with all requirements of the contract. Sampling inspection, as part of the manufacturing operations, is an acceptable practice to ascertain conformance to requirements, however, this does not authorize submission of known defective material, either indicated or actual, nor does it commit the Government to accept defective material.

4.2 Classification of inspections. The inspection requirements specified herein are classified as follows:

(a) First article inspection (see 4.3).
(b) Quality conformance inspection (see 4.4).

4.3 First article inspection. First article inspection shall consist of all the tests (groups A, B, and C of table V) and examinations of this specification.

4.4 Quality conformance inspection. Quality conformance inspection shall consist of the inspections listed in table V (groups A and B) and as specified in 4.5. Quality conformance shall be performed on every lot of wire procured under this specification.

4.4.1 Inspection lot. Unless otherwise specified (see 6.2), an inspection lot shall consist of all wire of the same part number, produced under essentially the same conditions, and presented for inspection and shipment at one time.

4.4.2 Unit of product. The unit of product for determining lot size for sampling shall be the quantity of wire offered for inspection on one coil, one reel, or one spool, as applicable.

4.4.3 Group A inspection. Group A inspection shall consist of the tests specified in table V. These tests cannot be performed on the finished wire as submitted for inspection; therefore, they shall be performed at the most appropriate stage of the manufacturing operation. The tests shall be performed on every lot of wire acquired under this specification.

4.4.3.1 Sampling. Sampling for group A inspection shall be as specified in 4.4.3.1.1 and 4.4.3.1.2.

4.4.3.1.1 Visual and mechanical examination (except for splices). Three samples representative of the inspection lot shall be selected (see 6.6.1.1).

4.4.3.1.2 Insulation flaws. Wire provided under this specification shall be subjected to the appropriate insulation flaws test as specified in 4.5.2. Insulation breakdowns resulting from this test and ends or portions not subjected to the test, shall be marked or cut out of the finished wire.

4.4.3.1.3 Circumferential elongation (extruded PTFE insulation only). Wire insulation shall be subjected to the circumferential elongation test as specified in 4.5.19.

4.4.4 Group B inspection. Group B inspection shall consist of the tests specified in table V. The sample shall be selected from inspection lots that have passed group A inspection.

4.4.4.1 Specimens. Samples for group B inspection shall be 26 foot (minimum) lengths for the insulation resistance test, and unless otherwise specified herein, for all other test shall be the length specified in the applicable test method. Only one specimen for each test shall be taken from any one sample unit.

TABLE V. First article and quality conformance inspections.

Inspection	Requirement	Test Method
Group A		
Visual and mechanical examination	3.1, 3.4, 3.4.1, 3.5, 3.5.6, 3.7 and 3.8	4.5.1
Insulation flaws:		4.5.2
Spark	3.6.1	4.5.2.1
Impulse dielectric	3.6.1	4.5.2.2
Circumferential elongation	3.6.17	4.5.19
Group B		
Dielectric withstanding voltage	3.6.2	4.5.3
Insulation resistance	3.6.3	4.5.4
Conductor resistance	3.6.4	4.5.5
Cold bend	3.6.5	4.5.6
Concentricity	3.6.6	4.5.7
Wrap back	3.6.8	4.5.9
Insulation tensile strength	3.6.13	4.5.14
Insulation elongation	3.6.14	4.5.15
Marking and stripe durability	3.6.15	4.5.16
Group C		
Surface resistance	3.6.7	4.5.8
Heat resistance	3.6.9	4.5.10
Flammability	3.6.10	4.5.11
Shrinkage	3.6.11	4.5.12
Heat aging	3.6.12	4.5.13
Fungus resistance	3.6.16	4.5.17
Toxicity	3.9	4.5.18

TABLE V First article and quality conformance inspections.

Inspection	Requirement	Test method	Classification of defect
Group A			
Visual and mechanical examination	3.1, 3.4, 3.4.1, 3.5, 3.5.6, 3.7 and 3.8	4.5.1	Major
Insulation flaws:		4.5.2	
Spark	3.6.1	4.5.2.1	Critical
Impulse dielectric	3.6.1	4.5.2.2	Critical
Circumferential elongation	3.6.17	4.5.19	Major
Group B			
Dielectric withstanding voltage	3.6.2	4.5.3	Critical
Insulation resistance	3.6.3	4.5.4	Major
Conductor resistance	3.6.4	4.5.5	Major
Cold bend	3.6.5	4.5.6	Major
Concentricity	3.6.6	4.5.7	Critical
Wrap back	3.6.8	4.5.9	Critical
Insulation tensile strength	3.6.13	4.5.14	Critical
Insulation elongation	3.6.14	4.5.15	Critical
Marking and strip durability	3.6.15	4.5.16	Minor
Group C			
Surface resistance	3.6.7	4.5.8	Major
Heat resistance	3.6.9	4.5.10	Major
Flammability	3.6.10	4.5.11	Minor
Shrinkage	3.6.11	4.5.12	Major
Heat Aging	3.6.12	4.5.13	Major
Fungus resistance	3.6.16	4.5.17	Minor
Toxicity	3.9	4.5.18	-- 2/

1/ Critical defect - A defect likely to result in hazardous or unsafe conditions for individuals; or is likely to prevent performance of the tactical function of a major end item such as an aircraft communications system, or main part thereof.

Major defect - A defect, other than critical, likely to result in failure or reduce materially the usability of the product for its intended purpose.

Minor defect - A defect not likely to reduce materially the usability of the product for its intended purpose. or is a departure from established standards having little bearing on the effective use or operation of the product.

4.4.4.2 Sampling plan. The sampling plan shall be in accordance with MIL-STD-105 for special inspection level S-2 (see 6.6.2). The sample size shall be based on the inspection lot size from which the sample was selected for group A inspection.

4.4.4.3 Rejected lots. If an inspection lot is rejected, the contractor may rework it to correct the defects, or screen out the defective units and resubmit for reinspection. Resubmitted lots shall be inspected using tightened inspection. Such lots shall be separate from new lots and shall be identified as reinspected lots.

4.4.4.4 Disposition of sample units. Sample units which have passed all the group B inspections may be delivered if the lot is accepted and the sample units are still within specified electrical tolerances.

4.5 Methods of inspection. Inspections shall be performed as specified in 4.5.1 through 4.5.17.

4.5.1 Visual and mechanical examination. Finished wire shall be examined to determine that the materials, physical dimensions, construction, splices, marking, and workmanship are in accordance with the applicable requirements (see 3.1, 3.4, 3.4.1, 3.5, 3.5.6, 3.7, and 3.8 respectively).

4.5.2 Insulation flaws. Testing for insulation flaws shall be as specified in 4.5.2.1 through 4.5.2.2, as applicable.

4.5.2.1 Spark test. The spark test shall be performed in accordance with method 6211.1 of FED-STD-228 at a rate that subjects each point on the wire to 9 cycles (minimum) of voltage at 60 hertz (Hz) or 12 cycles (minimum) of voltage at 3000 Hz. The test voltage shall be as specified (see 3.1).

4.5.2.2 Impulse dielectric test. The impulse dielectric test shall be in accordance with NEMA WC 52, except the insulation shall be removed or identified for subsequent removal for a minimum of 3 inches on each side of the point of dielectric failure. The test voltage shall be as specified (see 3.1).

4.5.3 Dielectric withstanding voltage. One inch of insulation shall be removed from each end of the specimen and the specimen shall be attached to an electric lead. The specimen shall be immersed in a 5 percent (by weight) solution of sodium chloride in water at 20 to 25°C, except the uninsulated ends, plus 1.5 inches of insulated wire at each end, shall be exposed to the air. After immersion for 1 hour, the voltage specified (see 3.1) at 60 Hz shall be applied between the conductor and an electrode in contact with the liquid. The applied voltage shall be uniformly increased from zero to the specified peak voltage in 30 seconds, maintained at that voltage for a period of 1 minute and uniformly reduced

to zero in 30 seconds. Wire shall meet the requirements specified in 3.6.2.

4.5.4 Insulation resistance. The insulation resistance test shall be performed on the same wire sample used for the Dielectric Withstand Voltage Test (4.5.3) and shall be in accordance with method 6031 of FED-STD-228 with the following exceptions:

(a) The test voltage shall be 500 +/- 5 volts direct current (Vdc) applied for 60, plus 5, minus 0 seconds from the time it is reached.
(b) The specimen shall be at least 26 feet long.
(c) The stirrer need not be used.

Wire shall meet the requirements specified in 3.6.3.

4.5.5 Conductor resistance. The conductor resistance test shall be performed in accordance with method 6021.1 of FED-STD-228. Wire shall meet the requirements specified in 3.6.4.

4.5.6 Cold bend. The cold bend test shall be performed in accordance with method 2011 of FED-STD-228 with the following exceptions:

(a) Specimen length shall be 12 inches, plus length required for wrapping on the mandrel.
(b) Specimen shall be stripped 1 inch on each end down to the bare conductor.
(c) Mandrel size shall be as specified (see 3.1).
(d) Mandrels of less than 3-inch diameter shall rotate at a rate of 15 +/- 3 revolutions per minute (4.0 +/- 0.2 seconds per revolution).
(e) Specimens shall be conditioned as specified (see 3.1).
(f) Specimens for which a 3-inch or larger mandrel is specified shall be subjected to a 180-degree bend over the mandrel, then unwound and bent 180 degrees in the opposite direction over the mandrel. Specimens for which a mandrel less than 3 inches in diameter is specified shall be subjected to at least three close turns of wire on the mandrel and rewrapped in the opposite direction in a similar manner.
(g) The specimen shall be removed from the mandrel and examined without straightening.
(h) Wire shall be immersed, except for 1.5 inches on each end, for 1 hour at 30°C (maximum).
(i) After 1 hour, while immersed, wire shall be subjected to the dielectric withstanding voltage test specified in 4.5.3.

Wire shall meet the requirements specified in 3.6.5.

4.5.7 Concentricity. The concentricity of the insulation shall be measured on a cross-section of the finished wire at 10X magnification. If the wire construction includes additional layers over the primary insulation, separate determinations shall be made for the primary insulation and finished wire. In making the determination, the minimum thickness of the primary insulation or

finished wire shall be located and measured in the cross-section. The maximum thickness of the primary insulation or finished wire wall shall be located and measured in the same cross-section. The percent concentricity is 100 times the ratio of the minimum measurement to the corresponding maximum measurement. Three cross-sections shall be measured in each specimen. Wire shall meet the requirements specified in 3.6.6. The failure of the concentricity of any cross-section shall constitute failure of the entire specimen.

4.5.8 Surface resistance (wire with outer braid only). Surface resistance shall be measured in accordance with method 6041 of FED-STD-228 with the following exceptions and additions:

(a) Two 0.250 inch electrodes consisting of ring-type metal foil shall be allowed.
(b) Electrodes shall be attached near the center of the specimen length.
(c) The maximum potential shall be 200 to 500 Vdc.
(d) Specimen shall be conditioned at 25 +/- 5°C, and 95 percent relative humidity.
(e) If the initial surface resistance is greater than 1000 megohm-inches, the test shall be considered complete.

Wire shall meet the requirements specified in 3.6.7.

4.5.9 Wrap back test (PTFE insulation only). The center portion of a 12-inch (minimum) length specimen of finished wire shall be tightly wound back on itself for a minimum of four close turns (see figure 1). The specimen shall then be placed in an oven and heated for 2 hours at 307 +/- 5°C. At the end of this period, the specimen shall be examined (without magnification) and subjected to the dielectric withstanding voltage test specified in 4.5.3. Wire shall meet the requirements specified in 3.6.8.

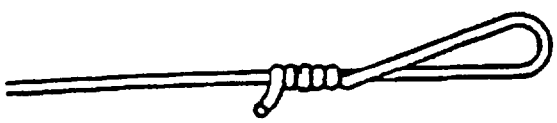

FIGURE 1. Wrap back test.

4.5.10 Heat resistance. Specimens of finished wire shall be 12 inches long, plus the length required for winding on the mandrel. The specimen shall be subjected to the specified temperature (see 3.1) for the following duration of testing:

(a)	PE insulation	48, plus 1, minus 0 hours.
(b)	All (except PE, CSPE, EPDM)	96, plus 1, minus 0 hours.
(c)	CSPE insulation	240, plus 1, minus 0 hours.
(d)	EPDM insulation	240, plus 1, minus 0 hours.

The specimen shall then be removed from the conditioning chamber and allowed to return to room temperature. If strand sealer has been used to make a watertight construction, the sealing compound shall not drip from the ends of the wire. The length of exposed conductor, if any, at each end of the specimen shall be considered as shrinkage of the insulation. In no case shall the shrinkage at either end exceed 0.125 inch. Following the oven aging, and unless otherwise required in the applicable specification sheet, specimens shall be wound tightly around a mandrel approximately (but not less than) three times the overall diameter of the wire for five close turns and removed as a helical coil. No readily visible defects shall result from this heating and coiling. The coiled sections shall be immersed (except for approximately 2 inches at each end) for 1 hour in tap water at room temperature, and shall then withstand the dielectric withstanding voltage test specified in 4.5.3 for 1 minute. Wire shall meet the requirements specified in 3.6.9.

4.5.11 Flammability. Testing for insulation flammability shall be as performed in accordance with VW-1 flame test method of UL Standard 1581. Wire shall meet the requirements specified in 3.6.10.

4.5.12 Shrinkage. Finished wire shall be tested in accordance with method 8231 of FED-STD-228. Insulation shall meet the requirements specified in 3.6.11.

4.5.13 Heat aging. The heat aging test shall be performed in accordance with method 4031 of FED-STD-228 with the following exceptions:

(a) Temperature shall be as specified (see 3.1).
(b) Duration of heating shall be 96, plus 1, minus 0 hours.
(c) Specimens shall be left at room temperature from 16 to 48 hours before elongation and tensile strength tests are performed.

Insulation shall meet the requirements specified in 3.6.12.

4.5.14 Insulation tensile strength. The insulation tensile strength test shall be performed in accordance with method 3021 of FED-STD-228, except that the rate of travel of power actuated grip shall be 2 inches (minimum) and 20 inches (maximum) per minute travel. Insulation shall meet the requirements specified in 3.6.13.

4.5.15 Insulation elongation. The elongation test shall be performed in accordance with method 3031 of FED-STD-228, except that the rate of travel of power actuated grip shall be 2 inches (minimum) and 20 inches (maximum) per minute travel. Insulation shall meet the requirements specified in 3.6.14.

4.5.16 Marking and stripe durability. This test shall determine the ability of printed information on insulating or jacketing material to remain legible in the presence of repeated abrasion.

4.5.16.1 Specimen. The specimen shall consist of a piece of completed wire which shall have sufficient length for use in the test as specified in 4.5.16.3. This test shall not apply to constructions which have clear jackets or braid over the primary insulation.

4.5.16.2 Special apparatus. Apparatus shall include an abrading machine which shall support and secure the specimen so that it is straight and horizontal, and which shall abrade the specimen printed identification by means of a motor driven, transversely reciprocating steel pin. This steel pin shall have a diameter of 0.025 ± 0.001 inch where it abrades the specimen, and shall have a surface roughness of not less than 2 microinches, in accordance with ANSI B46.1. (A selected sewing needle may satisfy these requirements.) The steel pin shall be horizontal and perpendicular to the specimen axis, shall ride along the top of the specimen, and shall be weighted to bear down on the specimen with a force of 1 plus 1/16, minus 0 pound for wire size number 24 or larger, and 1/2 plus 1/8, minus 0 pound for wire size number 20 or less, at all times during the test. This pin shall be reciprocated at a rate of 60 ± 2 cycles per minute, so that the pin is drawn along the specimen for a distance of 3/8 plus 1/16, minus 0 inch in each direction (3/4-inch minimum total excursion) during each cycle. The abrading machine shall incorporate an automatic counter to total the number of times that the specimen is abraded by the steel pin during the test.

4.5.16.3 Procedure. The specimen shall be wiped with a clean, dry cloth to remove any lubricant or dirt, and shall be secured in the abrading machine with the specimen printed identification facing upwards, where it is to be abraded by the steel pin. The automatic counter shall be set initially to zero. The abrading machine motor shall then be turned on, allowing the steel pin to reciprocate and abrade the specimen printed identification either until the printed identification is no longer legible in the abraded region, or until not less than 125 abrasive cycles (250 strokes) have been completed, whichever occurs first. The number of abrasive cycles completed shall then be noted. This test shall next be repeated four more times (five times total), subjecting a fresh portion of the specimen printed identification to abrasion each time.

4.5.16.4 Observation. Specimen failure shall be construed if the median value of the number of abrasive cycles completed during each of the five tests is less than 125.

4.5.17 Fungus resistance. The fungus resistance test shall be performed in accordance with ASTM G 21. Wire shall meet the requirements specified in 3.6.16.

4.5.18 Toxicity. Toxicity concentration levels for the finished wire shall not exceed the values specified in MIL-E-917, table I, in accordance with the methods specified (see 6.4). Wire shall meet the requirements specified in 3.9.

4.5.19 Circumferential elongation (extruded TFE or abrasion resistant TFE insulation only). This test method measures the elongation of a thin slug of wire insulation in the circumferential (radial) direction. The wire insulation slug is radially elongated by axial movement of a tapered cone through the stationary slug. The overall test apparatus is shown in figure 2. A 1 to 1-1/2-inch slug of insulation shall be removed from the conductor. Care shall be taken to prevent

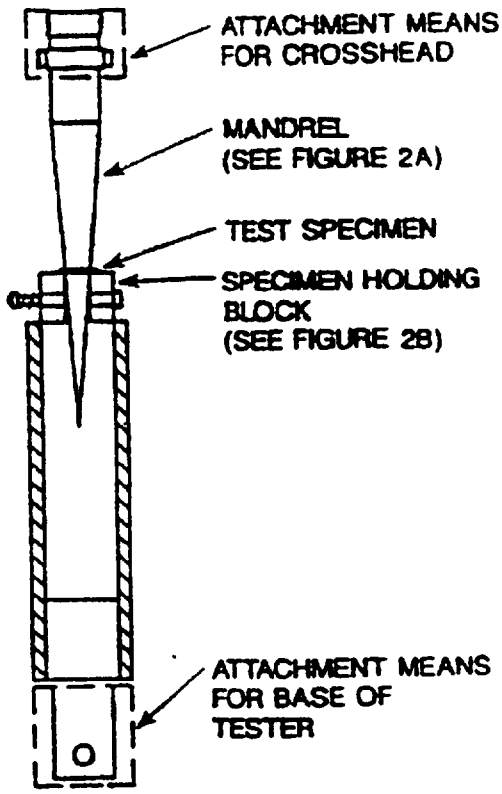

FIG. 2. CIRCUMFERENTIAL ELONGATION TEST APPARATUS

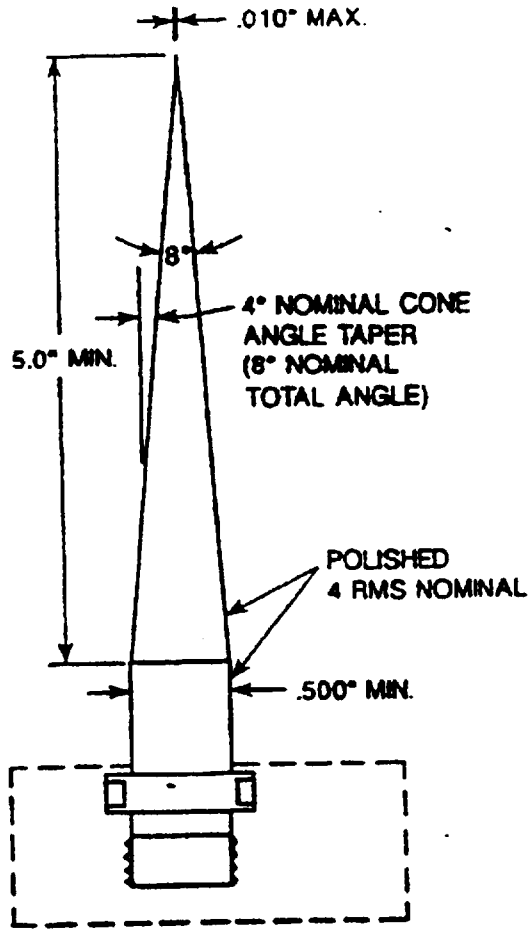

FIG. 2A. TEST MANDREL FOR CIRCUMFERENTIAL ELONGATION

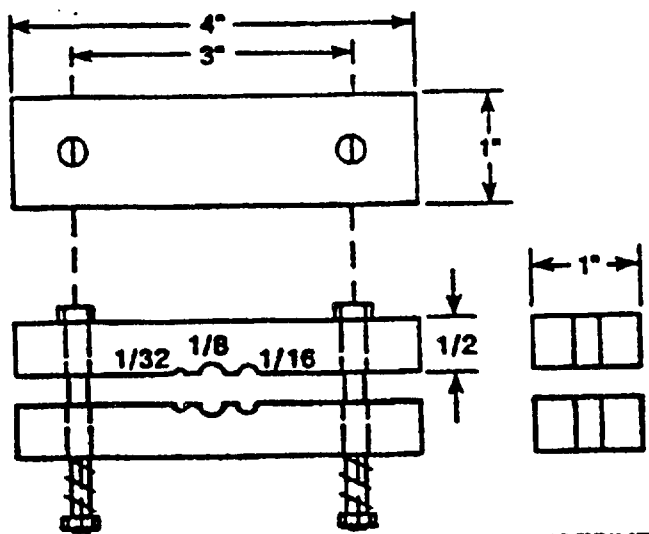

HOLE SIZES

AWG	HOLE SIZE
4 - 10	1/8
12 - 16	1/16
18 - 28	1/32

FIG. 2B. CIRCUMFERENTIAL ELONGATION SPECIMEN HOLDING BLOCK

CIRCUMFERENTIAL ELONGATION TEST APPARATUS

scratching, crimping, stretching, or otherwise damaging the insulation. The diameter of the exposed conductor should be measured to the nearest 0.001 inch. Cut five test specimens 0.125 inch ±.02 inch in length from the insulation slug using a sharp razor blade or an appropriate sample preparation fixture. Both ends of the test specimens shall be cut square. Slide a specimen onto the cone until it just touches the edges of the cone. The cone should be attached to a moveable crosshead as shown in figure 2a. Position the specimen holding block perpendicular to the cone as shown in figure 2b. Align the cone tip and the appropriate sized hole of the specimen holding block for the wire size being tested. Move the cone through the stationary specimen at a uniform speed of 20 ±.2 inches/minute until the specimen ruptures. Determine the length of the cone that has passed through the specimen causing rupture. The percent circumferential elongation (% CE) is calculated as follows:

$$\% \text{ CE} = \frac{(2 \times L \times \text{Tan}\theta - \text{CD})}{\text{CD}} \times 100\%$$

L = Cone length required to rupture specimen (inches)
CD = Conductor diameter (inches)
θ = Measured cone angle taper (degrees)
2 x L x Tanθ = Inner diameter of the test specimen at rupture (inches)

Five specimens shall be tested and the average value of the five specimens calculated.

4.5.20 Partial discharge (Corona) level test. Sample of completed insulated wire shall comply with the minimum discharge (corona) level specified in ASTM D 2802 when tested in accordance with the procedures of ICEA Publication T-24-380.

4.6 Inspection of packaging. Sample packages and packs, and the inspection of the preservation, packing and marking for shipment and storage shall be in accordance with the requirements of section 5 and the documents specified therein.

5. PACKAGING

(The packaging requirements specified herein apply only for direct Government acquisition. For the extent of applicability of the packaging requirements of referenced documents listed in section 2, see 6.5.)

5.1 General.

5.1.1 Put-up. Unless otherwise specified (see 3.1 and 6.2), the wire shall be furnished in continuous lengths of 500 to 1000 feet coiled, on spools or reels at the contractor's option. No more than 25 percent of the total footage of any one wire part or identifying number (PIN) (see 6.7) shall be shipped in lengths less than minimum. See appendix B for PTFE length requirements.

5.2 Packaging requirements. The packaging of wire, put-up as specified (see 5.1.1), shall be in accordance with MIL-C-12000 for the level of preservation (A or C), the level of packing (A, B, or C), including marking and packaging acquisitioning options therein, as specified (see 6.2). In addition, for Navy

acquisitions, the following applies:

(a) Navy fire-retardant requirements.

(1) Lumber and plywood. When specified (see 6.2), all lumber and plywood including laminated veneer material used in shipping container and pallet construction, members, blocking, bracing, and reinforcing shall be fire-retardant treated material conforming to MIL-L-19140 as follows:

Level A and B - Type II weather resistant.
Category 1 - general use.

Level C - Type I non weather resistant.
Category 1 - general use.

(2) Fiberboard. When specified (see 6.2), fiberboard used in the construction of class-domestic, non-weather resistant fiberboard and cleated fiberboard boxes including interior packaging forms shall meet the flame spread index and specific optic density requirements of PPP-F-320 and amendments thereto.

(b) Special marking. Unless otherwise specified (see 6.2), each coil spool or reel, as applicable, in addition to the MIL-C-12000 marking requirements, shall be marked with the following:

(1) Specification sheet title and date.
(2) PIN.
(3) Manufacturer's name or logo.
(4) Bar code.

6. NOTES

(This section contains information of a general or explanatory nature that may be helpful, but is not mandatory.)

6.1 Intended use. The single conductor wire covered in this specification is intended for use in lead wire and internal wiring of electrical and electronic equipment and switchboards.

6.1.1 Thin wall insulation. Precautionary considerations should be given when selecting thin wall insulated wire. Wire having thin wall insulation of 0.007 inch thickness or less is intended for limited low voltage applications, is relatively fragile, easily damaged, and should not be used where mechanical stress or abrasive environment may exist. Use of this wire may not be appropriate in circuits requiring the highest degree of reliability. In order to appear consistent, the temperature rating is the same as assigned to heavier walls of the same dielectric material. However, care should be taken during installation to avoid damaging the dielectric with hot soldering iron or mechanical abuse and to leave no residual physical strain on the dielectric wall, because plastic flow may result in failures.

6.1.2 Stranded conductor size designations. The conductor sizes and the corresponding size designations of this specification are in accordance with established usage for stranded, copper conductors for hookup wire in the electronic and aircraft industries. These sizes and size designations are not identical with AWG sizes for solid wire and stranded wire. The diameter and cross-sectional areas of the stranded conductors of this specification are, in most sizes, only roughly approximate to those of AWG solid conductors of the same numerical size designation.

6.1.3 Solid conductors. The use of solid conductors should be cautioned. Usage should be limited to lengths less than 10 inches and is not recommended where flexing may occur or the wire may be subjected to different vibratory modes along its length, such as between different chassis.

6.2 Acquisition requirements. Acquisition documents must specify the following:

(a) Title, number, and date of this specification.
(b) Classification of wire required (see 1.2 and 6.7).
(c) Issue of DoDISS to be cited in the solicitation, and if required, the specific issue of individual documents referenced (see 2.1.1 and 2.2).
(d) Title, number and date of applicable specification sheet (see 3.1).
(e) Conductor coating material (see 3.4.1.1 through 3.4.1.7).
(f) Whether braid, if required, is to be made of synthetic textile or glass yarn (see 3.4.3).
(g) Method of stranding for AWG sizes No. 10 and smaller, if other than specified (see 3.5.1).
(h) Product identification requirements, if other than specified (see 3.7).
(i) Quality conformance inspection lot, if other than specified (see 4.4.1).
(j) Length of wire, if other than specified (see 5.1.1).
(k) Form or put-up if other than contractors option (see 5.1.1).
(l) Coil, spool, and reel marking requirements, if other than specified (see 5.2 and 5.2(b)).
(m) Level of preservation, packing, and packaging options required (see 5.2).
(n) Fire-retardant material, when required (see 5.2(a)).
(o) Special or unique storage or time conditions.

6.3 First article. When first article inspection is required, the contracting officer should provide specific guidance to offerors whether the item(s) should be a preproduction sample, a first article sample, a first production item, a sample selected from the first 10 production items, a standard production item from the contractor's current inventory (see 3.2), and the number of items to be tested as specified in 4.3. The contracting officer should also include specific instructions in acquisition documents regarding arrangements for examinations, approval of first article test results, and disposition of first articles. Invitations for bids should provide that the Government reserves the right to waive the requirement for samples for first article inspection to those bidders offering a product which has been previously acquired or tested by the

Government, and that bidders offering such products, who wish to rely on such production or test, must furnish evidence with the bid that prior Government approval is presently appropriate for the pending contract. Bidders should not submit alternate bids unless specifically requested to do so in the solicitation.

6.4 Toxicity concentration levels of first article sample. With respect to toxicity levels of wire inspected to this specification, it is the Government's intent to accumulate data from the testing of first article samples. This data will be compiled and evaluated to establish appropriate concentration levels of toxic gases for future acceptable maximum concentration levels. Contractors are requested to provide such data with respect to their products following first article testing. This data will not be used for the rejection of any product first article testing.

6.5 Sub-contracted material and parts. The packaging requirements of referenced documents listed in section 2 do not apply when material and parts are acquired by the contractor for incorporation into the equipment and lose their separate identity when the equipment is shipped.

6.6 Lot acceptance and rejection criteria.

6.6.1 Group A inspection.

6.6.1.1 Visual and mechanical examination (except for splices). Failure of any sample to pass these examinations constitutes a failure of the lot (see 4.4.3.1.1).

6.6.2 Group B inspection. The acceptance quality level (AQL) is 6.5 percent.

6.6.2.1 Noncompliance. If a sample fails to pass group B inspection, the contractor should notify the cognizant inspection activity of such failure and take corrective action on the materials or processes, or both, as warranted, and on all units of the product which can be corrected and which were manufactured with essentially the same materials and processes, and which are considered subject to the same failure. Acceptance and shipment of the product will be discontinued until corrective action acceptable to the inspection activity has been taken. After the corrective action has been taken, group B inspection should be repeated on additional sample units. (This includes all tests and examinations, or the test which the original sample failed, at the option of the inspection activity.) Group A inspection may be reinstituted; however, final acceptance and shipment will be withheld until group B inspection has shown that the corrective action was successful. In the event of failure after reinspection, information concerning the failure should be provided to the cognizant inspection activity.

6.7 PIN. PINs should be of the following form, as specified (see 6.2):

M16878/15	-	B	C	B	*
(see 6.7.1)		(see 1.2.3)	(see 1.2.4)	(see 1.2.5)	(see 1.2.6)

6.7.1 Military specification sheet number. The Military specification sheet number designation consists of a prefix M which indicates an item defined by inch-pound units, the specification number, and the specification sheet number followed by applicable dash numbers (letters).

6.8 Subject term (key word) listing.

Chlorosulfonated polyethylene
Conductor, solid
Conductor, stranded
Ethylene-propylene diene elastomer
Polyolefin, cross-linked
Polyamide
Polyethylene
Polytetrafluoroethylene
Polyvinyl chloride
Rubber, silicone

6.9 Changes from previous issue. Marginal notations are not used in this revision to identify changes with respect to the previous issue due to the extensiveness of the changes.

Reviewing activity:
Navy - AS

Preparing activity:
Navy - SH
(Project 6145-N330)

APPENDIX A

WIRE, ELECTRICAL, INSULATED
GENERAL SPECIFICATION FOR

10. SCOPE

10.1 Scope. This appendix provides a guide for supersession of wire types defined in MIL-W-16878D to those covered in MIL-W-16878F.

20. APPLICABLE DOCUMENTS

This section is not applicable to this appendix.

30. SUPERSESSION DATA

	MIL-W-16878D	MIL-W-16878E	MIL-W-16878F
GENERAL DESCRIPTION			
600 VOLT, 105°C PVC	TYPE B M16878/17	M16878/1 M16878/17	M16878/1
1000 VOLT, 105°C PVC	TYPE C M16878/18	M16878/2 M16878/18	M16878/2
3000 VOLT, 105°C PVC	TYPE D M16878/19	M16878/3 M16878/19	M16878/3
600 VOLT, 200°C/260°C PTFE	TYPE E M16878/25 M16878/26	M16878/4 M16878/21 M16878/25 M16878/26	M16878/4 M16878/21
1000 VOLT, 200°C/260°C PTFE	TYPE EE M16878/27 M16878/28 M16878/34 M16878/35	M16878/5 M16878/22 M16878/27 M16878/28 M16878/34 M16878/35	M16878/5 M16878/22
250 VOLT, 200°C/260°C PTFE	TYPE ET M16878/23 M16878/24	M16878/6 M16878/20 M16878/23 M16878/24	M16878/6 M16878/20

GENERAL DESCRIPTION	MIL-W-16878D	MIL-W-16878E	MIL-W-16878F
600 VOLT, SILICONE RUBBER	TYPE F	M16878/7 M16878/29	M16878/7 M16878/29
1000 VOLT, SILICONE RUBBER	TYPE FF M16878/31 M16878/32	M16878/8 M16878/30 M16878/31 M16878/32	M16878/8 M16878/30
PE, 75°C	TYPE J M16878/33	M16878/10 M16878/33	M16878/10
FEP, 600 VOLT, 200°C	TYPE K	M16878/11	M16878/11
FEP, 1000 VOLT, 200°C	TYPE KK	M16878/12	M16878/12
FEP, 250 VOLT, 200°	TYPE KT	M16878/13	M16878/13
XLPE, 600 VOLT, 125°C	---	-----	M16878/14
XLPE, 1000 VOLT, 125°C	---	-----	M16878/15
XLPE, 3000 VOLT, 125°C	---	-----	M16878/16
XLPO, 600 VOLT, 105°C	---	-----	M16878/36
EPDM, 600 VOLT, 150°C	---	-----	M16878/37
EPDM, 5000 VOLT, 125°C	---	-----	M16878/38

WIRE, ELECTRICAL, INSULATED
GENERAL SPECIFICATION FOR

10. SCOPE

10.1 Scope. This appendix establishes the minimum continuous wire lengths for polytetrafluorethylene (PTFE) wire constructions. The information contained herein is intended for compliance unless there is an alternative specified in 6.2.

20. APPLICABLE DOCUMENTS

This section is not applicable to this appendix.

30. REQUIREMENTS

30.1 Put-up Tabulation. Due to the nature of the PTFE wire-forming process, Table B1 specifies the minimum lengths and quantity of pieces per spool or reel that are acceptable unless otherwise specified. (see 6.2)

TABLE B1. Put-up tabulation for PTFE wire constructions.

AWG size	Percentage of order	Length (feet) one continuous length	Max. no. of lengths (per spool or reel)	
			500-1000 ft.	1001-1500 ft.
32 to 22	25 25 50	50 - 75 75 - 300 301 or more	3	5
20 to 16	Unacceptable 20 50 30	Under 75 75 - 100 101 - 300 301 or more	4	6
14 to 10	Unacceptable 40 50 10	Under 50 50 - 100 101 - 300 301 - more	5	7
8 and larger	10 70 20	25 - 50 50 - 100 100 or more	6	8

30.2 Special Marking. Each spool or reel shall be marked accordingly with the length in feet and location of each piece.

STANDARDIZATION DOCUMENT IMPROVEMENT PROPOSAL

INSTRUCTIONS

1. The preparing activity must complete blocks 1, 2, 3, and 8. In block 1, both the document number and revision letter should be given.
2. The submitter of this form must complete blocks 4, 5, 6, and 7.
3. The preparing activity must provide a reply within 30 days from receipt of the form.

NOTE: This form may not be used to request copies of documents, nor to request waivers, or clarification of requirements on current contracts. Comments submitted on this form do not constitute or imply authorization to waive any portion of the referenced document(s) or to amend contractual requirements.

I RECOMMEND A CHANGE:	1. DOCUMENT NUMBER MIL-W-16878F(NAVY)	2. DOCUMENT DATE (YYMMDD) 11 SEPTEMBER 1992

3. DOCUMENT TITLE
WIRE, ELECTRICAL, INSULATED, GENERAL SPECIFICATION FOR

4. NATURE OF CHANGE *(Identify paragraph number and include proposed rewrite, if possible. Attach extra sheets as needed.)*

5. REASON FOR RECOMMENDATION

6. SUBMITTER [redacted]

7. PREPARING ACTIVITY

a. NAME	b. TELEPHONE (Include Area Code) (1) Commercial	(2) AUTOVON
TECHNICAL POINT OF CONTRACT MR. C. Y. LU., SEA 05E23	(703) 602-3124	8-332-3124

c. ADDRESS (Include Zip Code)
COMMANDER, ATTN: 05Q42, NAVAL SEA SYSTEMS COMMAND, 2531 NATIONAL CENTER 3
WASHINGTON, D.C. 20362-5160

IF YOU DO NOT RECEIVE A REPLY WITHIN 45 DAYS, CONTACT:
Defense Quality and Standardization Office
5203 Leesburg Pike, Suite 1403, Falls Church, VA 22041-3466
Telephone (703) 756-2340 AUTOVON 289-2340