METRIC

MIL-STD-188-110A

30 SEPTEMBER 1991

SUPERSEDING
MIL-STD-188-110
15 NOVEMBER 1980

MILITARY STANDARD

INTEROPERABILITY AND PERFORMANCE STANDARDS FOR DATA MODEMS

AMSC N/A

AREA SLHC/TCTS

DISTRIBUTION STATEMENT A. Approved for public release; distribution is unlimited.

FOREWORD

1. This Military Standard is approved and mandatory for use by all Departments and Agencies of Defense (DOD) in accordance with DOD Instruction 5000.2, dated 23 February 1991.

2. Beneficial comments (recommendations, additions, deletions) and any pertinent data which may be of use in improving this document should be addressed to: TIC/TIS, Scott AFB, IL 62225-6343, by using the self-addressed Standardization Document Improvement Proposal (DD Form 1425) appearing at the end of this document, or by letter.

3. Originally, Military Standard 188 (MIL-STD-188) covered technical standards for tactical and long-haul communications, but later evolved through revisions (MIL-STD-188A, MIL-STD-188B) into a document applicable to tactical communications only (MIL-STD-188C).

4. The Defense Communications Agency (DCA) published DCA Circulars (DCAC) promulgating standards and engineering criteria applicable to the long-haul Defense Communications System (DCS) and to the technical support of the National Military Command system (NMCS).

5. As a result of a Joint Chiefs of Staff (JCS) action, standards for all military communications are now being published in a MIL-STD-188 series of documents. The MIL-STD-188 series is subdivided into a MIL-STD-188-100 series covering common standards for tactical and long-haul communications, a MIL-STD-188-200 series covering standards for tactical communications only, and a MIL-STD-188-300 series covering standards for long-haul communications only. Emphasis is being placed on developing common standards for tactical and long-haul communications published in the MIL-STD-188-100 series.

6. This document contains technical standards and design objectives for minimum interface and performance standards pertinent to modulators-demodulators (modems) which operate in both long-haul and tactical communications systems. The terms "system standard" and "design objective (DO)" are defined in FED-STD-1037. In this document, the word "shall" identifies mandatory system standards. The word "should" identifies DOs which are desirable but not mandatory.

CONTENTS

PARAGRAPH		PAGE
1.	SCOPE	1
1.1	Scope	1
1.2	Applicability	1
1.3	Application guidance	1
2.	APPLICABLE DOCUMENTS	3
2.1	Government documents	3
2.1.1	Specifications and standards	3
2.1.2	Other government documents and publications	4
2.2	Non-government publications	5
2.3	Order of precedence	6
3.	DEFINITIONS	7
3.1	Terms	7
3.2	Abbreviations and acronyms	8
4.	GENERAL REQUIREMENTS	11
4.1	Functional employment	11
4.2	Common parameters	12
4.2.1	Modulation and data signaling rates	12
4.2.1.1	Signaling Rate Tolerance	12
4.2.2	Logic and signaling sense for binary signals	12
4.2.3	Digital interface characteristics	14
4.2.4	Terminal impedance for quasi-analog signals	14
4.2.4.1	Modems used in multichannel subsystems	14
4.2.4.2	Modems used in single-channel radio subsystems	14
4.2.5	Quasi-analog signal levels	14
4.2.5.1	Modems used in multichannel subsystems	14
4.2.5.2	Modems used in single-channel radio subsystems	16
4.2.6	Clock equipment, control, and timing	16
4.3	General design requirements	16
4.3.1	Federal maritime interoperability requirements	17
4.3.2	International interoperability requirements	17
4 3.2.1	Shore-to-ship broadcast systems	17
4.3.2.2	Maritime air communications systems	17
4.3.2.3	Radio teletypewriter systems	17
5.	DETAILED REQUIREMENTS	19
5.1	Frequency shift keying (FSK) data modulators-demodulators (modems) for single-channel radio equipment	19
5.1.1	Narrow-shift FSK modem	19
5.1.2	Wide-shift FSK modem	19
5.1.3	Speech-plus-telegraph operation	19
5.2	FSK data modems for voice frequency (VF) channel operation	20
5.2.1	FSK data modems for 150 bits per second (bps) or less	20
5.2.1.1	Operational characteristics	20
5.2.1.2	Modulation characteristics	20
5.2.1.3	Carrier suppression	21

CONTENTS

PARAGRAPH		PAGE
5.2.1.4	Break-in signal characteristics	21
5.2.2	FSK data modems for 1200 bps or less	21
5.2.2.1	Modulation characteristics	21
5.2.2.2	Modulator output spectrum	22
5.3	HF data modems	22
5.3.1	General requirements	22
5.3.1.1	Waveforms and Rates	22
5.3.1.2	Voice digitization	22
5.3.1.3	Optional modes	22
5.3.1.4	Interface requirements	23
5.3.1.4.1	Line-side data characteristics	23
5.3.1.4.2	Equipment-side characteristics	23
5.3.2	Serial (single-tone) mode	23
5.3.2.1	General	23
5.3.2.2	Sequencing of time phases	23
5.3.2.2.1	Synchronization (sync) preamble phase	25
5.3.2.2.2	Data phase	28
5.3.2.2.3	EOM phase	28
5.3.2.2.4	FEC coder and interleaver flush phase	29
5.3.2.3	Functional descriptions	29
5.3.2.3.1	EOM sequence	29
5.3.2.3.2	Interleaver flush	29
5.3.2.3.3	FEC encoder	29
5.3.2.3.4	Interleave load	31
5.3.2.3.5	Interleave fetch	33
5.3.2.3.6	Modified-Gray decoder (MGD)	34
5.3.2.3.7	Symbol formation	35
5.3.2.3.7.1	Symbol formation for data transmission	35
5.3.2.3.7.1.1	Unknown data	35
5.3.2.3.7.1.2	Known data	35
5.3.2.3.7.2.	Sync preamble sequence	36
5.3.2.3.7.2.1	General	36
5.3.2.3.7.2.2	Preamble pattern generation	39
5.3.2.3.8	Scrambler	39
5.3.2.3.8.1	Data sequence randomizing generator	39
5.3.2.3.8.2	Sync sequence randomizing generator	41
5.3.2.3.9	PSK modulation	41
5.3.2.4	Waveform summary	41
5.3.2.5	Performance requirements	42
5.4	Wireline data modems	42
5.4.1	General requirements	42
5.4.1.1	Interface requirements	42
5.4.1.2	Output power level	42
5.4.2	Performance requirements	42
5.4.2.1	General	42
5.4.2.2	BER for private line (leased) service point-to-point circuits	43

CONTENTS

PARAGRAPH		PAGE
5.4.2.3	BER and other parameters for PSN service dial-up circuits	43
5.4.2.4	Automatic answering and calling sequence for PSN	43
5.5	Data modems for 600 bps or 1200 bps	43
5.6	Data modems for 2400 bps	43
5.6.1	Optional mode	44
5.6.2	Throughput	44
5.7	Data modems for 4800 bps	44
5.7.1	Fallback operation	44
5.7.2	Optional modes	44
5.8	Data modems for 9600 bps	44
5.8.1	Private line operation	44
5.8.2	Fallback operation	44
5.8.3	Switched network operation (U.S. PSN, foreign push-to-talk (PTT) and Digital Switched Network (DSN)	44
5.9	Data modems with data signaling rates greater than 9600 bps	44
6.	NOTES	45
6.1	Intended use	45
6.2	Issue of Department of Defense index of specifications and standards (DODISS)	45
6.3	Subject term (key word) listing	45

FIGURES

1	Standard interface between data terminal equipment and data circuit-terminating equipment	13
2	Serial (single-tone) waveform functional block diagram	24
3	An example of equipment interface block diagram	26
4	FEC encoder block diagram	30
5	State constellation diagram	38
6	Randomizing shift register functional diagram	40
A-1	Phase modulation vectors for HF 16-tone DPSK data modem	51
B-1	Transmit direction functional diagram	72
B-2	Data flow through encoder and interleaver for an interleaver containing an even number of code words	73
B-3	Data flow through encoder and interleaver for an interleaver containing an odd number of code words	74
B-4	Transmit sequence of events	75
B-5	Framing sequence feedback shift register generator	76

TABLES

I	Reference list for modem applications	11
II	Logic and signal sense for binary signals	12

CONTENTS

TABLES		PAGE
III	Tactical switched multichannel communications subsystems	15
IV	Characteristic frequencies of FSK data modems for single-channel radio equipment	19
V	Characteristic frequencies of FSK data modems for single-channel speech-plus-telegraph operation	20
VI	Characteristic frequencies of FSK data modems for 150 bps or less	21
VII	Characteristic frequencies of FSK data modems for 1200 bps or less	21
VIII	Error-correcting coding, frequency-hopping operation	29
IX	Error-correcting coding, fixed-frequency operation	31
X	Interleaver matrix dimensions	32
XI	Bits-per-channel symbol	33
XII	Modified-Gray decoding at 2400 bps and 4800 bps	34
XIII	Modified-Gray decoding at 75 bps (fixed-frequency) and 1200 bps	34
XIV	Channel symbol mapping for 75 bps	36
XV	Assignment of designation symbols D1 and D2	37
XVI	Conversion of two-bit count value to three-bit symbol	37
XVII	Channel symbol mapping for sync preamble	39
XVIII	Frequency-hopping operation waveform characteristics	41
XIX	Fixed-frequency operation waveform characteristics	42
XX	Serial (single-tone) mode minimum performance	43
A-I	Data-tone frequencies and bit locations for HF 16-tone DPSK data modem	49
A-II	Modulation characteristics for HF 16-tone DPSK data modem	50
B-I	Selectable interleaving degrees	57
B-II	Normalized tone amplitudes and initial phases	57
B-III	Framing sequence insertion intervals and lengths	59
B-IV	Data-tone frequencies and bit locations	60
B-V	Modulation characteristics of the 39-tone HF modem	61
B-VI	In-band time/frequency diversity	62
B-VII	In-band frequency diversity	63
B-VIII	Asynchronous character set	64
B-IX	75-bps and 150-bps asynchronous operational parameters	65
B-X	300-bps and 600-bps asynchronous operational parameters	67
B-XI	1200-bps and 2400-bps asynchronous operational parameters	69
B-XII	Probability of bit error vs signal-to-noise ratio	71

APPENDIXES

APPENDIX A	16-TONE DIFFERENTIAL PHASE-SHIFT KEYING (DPSK) MODE	47
10.	GENERAL	47
10.1	Scope	47
10.2	Applicability	47

CONTENTS

APPENDIXES

PARAGRAPH		PAGE
20	APPLICABLE DOCUMENTS	47
30	DEFINITIONS	47
40	GENERAL REQUIREMENTS	47
40.1	Introduction	47
40.2	Input/output data signaling rates	47
50	DETAILED REQUIREMENTS	47
50.1	Modulator output signal	47
50.2	Data-tone frequencies	47
50.3	Phase modulation and encoding	47
50.4	Synchronization	48
50.5	Doppler correction	48
50.6	In-band diversity combining	48
50.7	Demodulator signal alarm	48
APPENDIX B	39-TONE PARALLEL MODE	53
10.	GENERAL	53
10.1	Scope	53
10.2	Applicability	53
20.	APPLICABLE DOCUMENTS	53
30.	DEFINITIONS	53
40.	GENERAL REQUIRMENTS	53
50.	DETAILED REQUIREMENTS	53
50.1	Characteristics	53
50.2	Error-correcting coding	53
50.3	Interleaving	54
50.4	Synchronization	54
50.4.1	Preamble	54
50.4.2	Extended preamble	54
50.4.3	Data block synchronization	54
50.5	Modulator output signal	55
50.6	In-band diversity	55
50.6.1	Time/frequency diversity	55
50.6.2	Frequency diversity	55
50.7	Asynchronous data operation	55
50.7.1	Character length	56
50.7.2	Data signaling rate constraint	56
50.7.3	Data-rate adjustment	56

CONTENTS

APPENDIXES

PARAGRAPH		PAGE
50.7.3.1	Input data source rate greater than modem rate	56
50.7.3.2	Input data source rate less than modem rate	56
50.7.4	End-of-message (EOM) indication	56
50.7.5	Asynchronous mode interleaving and block framing	56
50.7.6	Bit packing	56
60.	PERFORMANCE REQUIREMENTS	56

1. SCOPE

1.1 Scope. This document established mandatory technical standards and design objectives (DO) that are necessary to ensure interoperability and to promote performance among data modulators-demodulators (modems) used in the voice frequency (VF) band of long-haul and tactical communications systems. This document also provides guidance to the designers of new data modems that incorporate characteristics not yet standardized by specifying the technical characteristics of data modems currently in the inventory. The purpose of this guidance is to ensure attainment of minimum acceptable performance and maximum interoperability between existing and future data modems with specified transmission channel conditions.

1.2 Applicability. These standards are mandatory within the Department of Defense (DOD) in the design, development and engineering of new communications facilities for both narrowband and wideband long-haul and tactical systems. In some cases, reference is made to other documents which provide standards for specific applications. It is not intended that existing systems be immediately converted to comply with the requirements of these standards. New systems, and those undergoing major modification or rehabilitation, shall conform to these standards subject to current procurement regulations. This document is applicable to the design and development of new data modems with standard data signaling rates up to and including 19200 bits per second (bps) used in long-haul and tactical communications systems. This document is not applicable to high frequency (HF) data modems used in the Tactical Digital Information Link (TADIL) A. The HF data modem standards for TADIL A are published in MIL-STD-188-203-1.

1.3 Application guidance. Requirements in this document, if applied as intended, shall ensure interoperability and performance of data modems having the same or similar functions. The variety of data modems shall be limited to that which is essential to effectively support the missions of the military forces. It is not intended that the standards contained in this document inhibit advances in communications technology. such advances are encouraged by including DOs which should be used if economically feasible. Additionally, such advances are facilitated by standardizing parameter values but not the technology that may be used to meet these parameter values. Mandatory equipment parameter values and requirements are specified by the use of the word "shall". Minimum performance requirements for the high frequency (HF) serial (single-tone) and parallel tone modem waveforms are specified in table XX and table B-XII, respectively. The specified values shown represent HF modem performance under ideal test conditions. To identify the minimum acceptable performance available to users, many factors, including operational test and evaluation, must be considered.

2. APPLICABLE DOCUMENTS

2.1 Government documents.

2.1.1 Specifications and standards. The following specifications and standards form a part of this document to the extent specified herein. Unless otherwise specified, the issues of these documents are those listed in the issue of the Department of Defense Index of Specifications and Standards (DODISS) and supplements thereto, cited in the solicitation (see 6.2).

SPECIFICATIONS

MIL-C-28883	Military Specification for the Advanced Narrowband Digital Voice Terminal (ANDVT) Tactical Terminal (TACTERM) CV-3591 and Ancillaries

STANDARDS

FEDERAL

FED-STD 1035	Coding, Modulation and Transmission Requirements for Single Channel Medium and High Frequency Radiotelegraph Systems Used in Government Maritime Mobile Telecommunications.
FED-STD-1037	Glossary of Telecommunication Terms

FEDERAL INFORMATION PROCESSING STANDARDS (FIPS)

FIPS-PUB-133	Coding and Modulation Requirements for Nondiversity 2400 Bit/Second Modems
FIPS-PUB-134-1	Coding and Modulation Requirements for 4800 Bit/Second Modems
FIPS-PUB-135	Coding and Modulation Requirements for Duplex 9600 Bit/Second Modems
FIPS-PUB-136	Coding and Modulation Requirements for Duplex 600 and 1200 Bit/Second Modems
FIPS-PUB-22-1	Synchronous Signaling Rates Between Data Terminal Equipment and Data Circuit-Terminating Equipment Utilizing 4-kHz Circuits

MILITARY

MIL-STD-188-100	Common Long Haul and Tactical Military Communication System Technical Standards
MIL-STD-188-114	Electrical Characteristics of Digital Interface Circuits
MIL-STD-188-141	Interoperability and Performance Standards for Medium and High Frequency Radio Equipment
MIL-STD-188-148	(S) Interoperability Standard for Anti-Jam (AJ) Communications in the High Frequency Band (2-30 MHz) (U)
MIL-STD-188-200	System Design and Engineering Standards for Tactical Communications

(Unless otherwise indicated, copies of Federal and military specifications and standards are available from the Standardization Document Order Desk, 700 Robbins Avenue, Building 4, Section D, Philadelphia PA 19111.)

2 1.2 Other Government documents and publications. The following other Government documents and publications form a part of this document to the extent specified herein. Unless otherwise specified, the issues are those cited in the solicitation.

FEDERAL COMMUNICATIONS COMMISSION (FCC)

FCC Rules and Regulations Part 68	Connection of Terminal Equipment to the Telephone Network

(Application for copies should be addressed to the U.S. Government Printing Office, Superintendent of Documents, Public Documents Department, Washington, D.C. 20402.)

DEPARTMENT OF DEFENSE (DOD)

DOD Directive 4120.21	Application of Specifications, Standards, and Related Documents in the Acquisition Process

(Copies of DOD Directives are available from the Standardization Document Order Desk, 700 Robbins Avenue, Building 4, Section D, Philadelphia PA 19111.)

DEFENSE COMMUNICATIONS AGENCY CIRCULARS (DCAC)

DCAC 300-175-9	DCS Operating-Maintenance Electrical Performance Standards

(Application for copies should be addressed to Director, DCA, ATTN: Code 316, Washington, DC 20305-2000. Requests for copies may be on DCA Form 117: Publication or Blank Form Request (for Government agencies only), or by letter with appropriate justification.)

2.2 Non-government publications. The following documents form a part of this document to the extent specified herein. Unless otherwise specified, the issues of the documents which are DOD adopted are those listed in the issues of the DODISS cited in the solicitation. Unless otherwise specified, the issues of documents not listed in the DODISS are the issues of the documents cited in the solicitation (see 6.2).

INTERNATIONAL STANDARDIZATION DOCUMENTS

NORTH ATLANTIC TREATY ORGANIZATION (NATO) STANDARDIZATION AGREEMENTS (STANAG)

STANAG 4197	Modulation and coding characteristics that must be common to ensure interoperability of 2400 bps linear predictive encoded digital speech transmitted over HF radio facilities
STANAG 4198	Parameter and coding characteristics that must be common to ensure interoperability of 2400 bps linear predictive encoded digital speech
STANAG 4285	Characteristics of 1200/2400/3600 bits per second single tone modulators/demodulators for HF radio links
STANAG 4291	Modulation and coding characteristics that must be common to assure interoperability of 2400 bps wireline modems for use in narrow-band secure voice systems
STANAG 5031	Minimum standards for naval HF, MF, and LF shore-to-ship broadcast systems
STANAG 5035	Introduction of an improved system for maritime air communications on HF, LF, and UHF

QUADRIPARTITE STANDARDIZATION AGREEMENTS (QSTAG)

QSTAG-303	Frequency shift standards for HF/RATT and VHF/RATT operation

(Application for copies should be addressed to: Standardization Document Order Desk, 700 Robbins Avenue, Building 4, Section D, Philadelphia PA 19111.)

INTERNATIONAL TELECOMMUNICATION UNION (ITU)

CCIR Regulations, Volume III	Radio Report 549: HF Ionospheric Channel Simulators
CCITT Volume VIII, Fascicle VIII.1	Data Communication over the Telephone Network

(Application for copies should be addressed to the General Secretariat, International Telecommunication Union, Place des Nations, CH-1211 Geneva 20, Switzerland or the U.S. Department of Commerce, National Technical Information Service, 5285 Port Royal Road, Springfield VA 22161.)

TELECOMMUNICATIONS INDUSTRIES ASSOCIATION (TIA)
(formerly Electronic Industries Association (EIA))

EIA-496	Interface Between Data Circuit-Terminating Equipment (DCE) and the Public Switched Telephone Network (PSTN)

(Application for copies should be addressed to the Telecommunications Industries Association (TIA), 2001 Eye Street NW, Washington, D.C. 20006, ATTN: Standard Sales Office (telephone (202) 457-4966).)

(Non-Government standards and other publications are normally available from the organizations that prepare or distribute the documents. These documents also may be available in or through libraries or other informational services.)

2.3 Order of precedence. In the event of a conflict between the text of this document and the references cited herein, the text of this document takes precedence. Nothing in this document, however, supersedes applicable laws and regulations unless a specific exemption has been obtained.

3. DEFINITIONS

3.1 Terms. Definitions of terms used in this document shall be as specified in FED-STD-1037. For the purposes of this standard, definitions are provided for the following terms, some of which have been repeated from FED-STD-1037 for the convenience of the reader.

Automatic link establishment (ALE). The capability of an HF radio station to make contact, or initiate a circuit, between itself and another specified radio station, without operator assistance and usually under processor control.

> NOTE: ALE techniques include automatic signaling, selective calling, and automatic handshaking. Other automatic techniques that are related to ALE are channel scanning and selection, link quality analysis (LQA), polling, sounding, message store and forward, address protection, and anti-spoofing.

Balanced to ground. Pertaining to electrical symmetry with respect to a common ground.

Break-in signal. A signal used to interrupt the other user and take control of the circuit.

Clear-to-send (CTS) signal. The control signal generated by the transmitting modem on the CTS connection to denote a state of readiness for transmission. The CTS signal is a response to the request-to-send (RTS) signal from the transmitting device.

Code rate. The ratio of the number of information symbols (k) to the total number of encoded symbols (n) in a code (i.e., the ratio of k/n).

Dead time. In hopping, the portion of a hop dwell period in which no transmission occurs.

Dwell period. The maximum amount of time a transmission occurs on a particular frequency.

Galois field. An arithmetic system containing a set of symbol elements with two operations (and their inverses) for combining pairs of elements.

In-band diversity combining. A combining of two or more signals which uses frequencies within the bandwidth of the information channel and carries the same information received with the objective of providing a single resultant signal that is superior in quality to any of the contributing signals.

Mode. An available format in a data modem supporting multi-waveform capability.

Narrowband. At HF radio frequencies (1.5 - 30 MHz) the nominal voice frequency (VF) bandwidth allocated for single channel radio (i.e., 3 kHz).

Nominal bandwidth. The widest band of frequencies, inclusive of guard bands, assigned to a channel.

Wideband. At HF radio frequencies (1.5 - 30 MHz) a bandwidth larger than 3 kHz.

Preamble code. A short sequence of symbols at the beginning of a coded sequence used to achieve synchronization.

Request-to-send (RTS) signal. The control signal generated by the transmitting terminal on the RTS connection to denote a request for transmission.

Secure voice. A voice communication that is protected against compromise through the use of an encryption system.

Transmission level point (TLP). A point in a transmission system at which the ratio, in decibels, of the power of the test signal at that point to the power of the test signal at a reference point, is specified.

Unbalanced to ground. Pertaining to electrical asymmetry with respect to a common ground.

NOTE: Frequently, the term "unbalanced" describes a circuit, one side of which is grounded.

3.2 Abbreviations and acronyms. Abbreviations and acronyms used in this document are defined below. Those that are also found in FED-STD-1037 have been included for the convenience of the reader.

ABCA	American, British, Canadian, Australian (armies)
AJ	anti-jamming
ALE	automatic link establishment
ANC	automatic node controller
ANDVT	Advanced Narrowband Digital Voice Terminal
ANSI	American National Standards Institute
AUTODIN	Automatic Digital Network
Bd	baud
BER	bit error ratio
bps	bits per second
BW	bandwidth
CCIR	International Radio Consultative Committee
CCITT	International Telegraph and Telephone Consultative Committee
CTS	clear to send
CTX	clear to transmit
CVSD	continuously variable slope delta (modulation)
dB	decibel(s)
dBm	dB referred to one milliwatt
dBm0	noise power in dBm referred to or measured at 0TLP
DCA	Defense Communications Agency
DCAC	Defense Communications Agency circular
DCD	data carrier detect
DCE	data circuit-terminating equipment

DCS	Defense Communications System
DO	design objective
DOD	Department of Defense
DODISS	Department of Defense Index of Specifications and Standards
DPSK	differential phase-shift keying
DSN	Digital Switched Network
DTE	data terminal equipment
EIA	Electronic Industries Association
EMI	electromagnetic interference
EOM	end of message
FCC	Federal Communications Commission
FDM	frequency-division multiplexing
FEC	forward error correction
FED-STD	Federal Standard
FIPS	Federal Information Processing Standards
FSK	frequency-shift keying
GF	Galois field
HF	high frequency
Hz	hertz
ITU	International Telecommunication Union
JCS	Joint Chiefs of Staff
kHz	kilohertz (1,000 hertz)
km	kilometer (1,000 meters)
LF	low frequency
log	logarithm
LQA	link quality analysis
LSB	least significant bit
MF	medium frequency
MGD	modified-Gray decoder
MHz	megahertz (1,000,000 hertz)
MIL-STD	military standard
MM	maritime mobile
modem	modulator-demodulator
ms	millisecond(s)
MSB	most significant bit
NATO	North Atlantic Treaty Organization
NMCS	National Military Command System
PCM	pulse-code modulation

PSK	phase-shift keying
PSN	public switched network
PTT	push-to-talk
QAM	quadrature amplitude modulation
QDPSK	quadrature differential phase-shift keying
QSTAG	Quadripartite Standardization Agreement
RA	receive audio
RATT	radio teletypewriter system
RC	receive clock
RCE	radio communications equipment
RD	receive data
rms	root-mean-square
RS	receive (HF radio) signal
RTE	radio terminal equipment
RTS	request to send
RTX	request to transmit
s	second(s)
(S)	SECRET
SNR	signal-to-noise ratio
STANAG	Standardization Agreement (NATO)
sync	synchronization
TA	transmit audio
TACTERM	tactical terminal
TC	transmit clock
TADIL	tactical digital information link
TD	transmit data
TDM	time-division multiplexing
TIA	Telecommunications Industries Association
TLP	transmission level point
TS	transmit (HF radio) signal
TX	transmit
(U)	UNCLASSIFIED
UHF	ultra high frequency
VF	voice frequency
VHF	very high frequency
VLF	very low frequency
0TLP	zero transmission level point(s)

4. GENERAL REQUIREMENTS

4.1 Functional employment. Data modulators-demodulators (modems) are employed in long-haul and tactical communications systems and subsystems. A delineation between long-haul and tactical communications systems can be found in Federal Standard (FED-STD)-1037. Data modems employ a variety of techniques for converting digital signals into quasi-analog signals for transmission over analog channels. Various modulation techniques have been standardized and no single technique has been found to be optimum for all applications. This section covers general requirements for both long-haul and tactical data modems operating over voice frequency (VF) and radio channels. A representative list is given in table I with the modulation types and data rates noted for each channel category listed. This table also provides a cross-reference to section 5 requirements.

NOTE: Very low frequency (VLF) radio modems are not standardized.

TABLE I. Reference list for modem applications.

Channel	Modulation type	Data rate (bps)	Reference paragraph
VF (4 kHz)	FSK	≤ 150	5.2.1
VF (4 kHz)	FSK	≤ 1200	5.2.2
VF (4 kHz)	(various)	600 or 1200	5.5
VF (4 kHz)	(various)	2400	5.6
VF (4 kHz)	DPSK	4800	5.7
VF (4 kHz)	QAM	4800, 7200, 9600	5.8
VF (4 kHz)	(various)	≥ 9600	5.9
LF radio (3 kHz)	FSK	≤ 150	5.1
MM radio (3 kHz)	FSK	≤ 150	5.1.1
HF radio (3 kHz)	FSK	≤ 150	5.1.2
HF radio (3 kHz)	PSK	75-4800	5.3.2
UHF radio (3 kHz)	FSK	≤ 150	5.1

4.2 Common parameters. All data modems shall comply with the applicable requirements of 4.2.1 through 4.2.6.

4.2.1 Modulation and data signaling rates. The modulation rates expressed in baud (Bd) and the data signaling rates expressed in bits per second (bps) at the standard interfaces shown on figure 1 shall be as listed below. These rates, with the exception of 50 Bd or bps, 75, 150, 300 and 600 bps comply with the requirements of FIPS-PUB-22-1:

a. 50.0 Bd or bps

b. 75 X 2^m Bd or bps, up to and including 9600 Bd or bps, where m is a positive integer 0, 1, 2,. . .7.

NOTE: FIPS-PUB-22-1 adopts American National Standards Institute (ANSI/X3.1-1987) synchronous signaling rates. Other rates (i.e., 3600, 7200, 12000 and 19200) are not standardized.

NOTE: The data signaling rate is expressed in bps; the modulation rate is expressed in Bd. Data signaling rates in bps and modulation rates in Bd are the same only for binary signaling. Data signaling rates in bps relate to modulation rates in Bd through the following equation:

Data signaling rates (bps) = k x modulation rates (Bd)

where $k = \log_2 M$ is the number of binary digits per modulation symbol, and M is the number of modulation symbols.

4.2.1.1 Signaling rate tolerance. Except where specified otherwise signaling rates shall not deviate from the nominal values by more than ± 0.01%.

4.2.2 Logic and signaling sense for binary signals. For data and timing circuits, the signal voltage with respect to signal ground shall be negative to represent the MARK condition and positive to represent the SPACE condition. The significant conditions and other logic and signal states shown in table II shall apply to telegraph and data transmission. An alternative capability shall be provided to interface with equipment that accepts positive mark and negative space signals.

TABLE II. Logic and signal sense for binary signals.

Application	Condition	Condition
Voltage to signal ground	Negative (-)	Positive (+)
Conventional term	Mark	Space
Binary digit value	(1)	(0)
Timing signal state	Off	On
FSK signal state	Lower frequency	Higher frequency

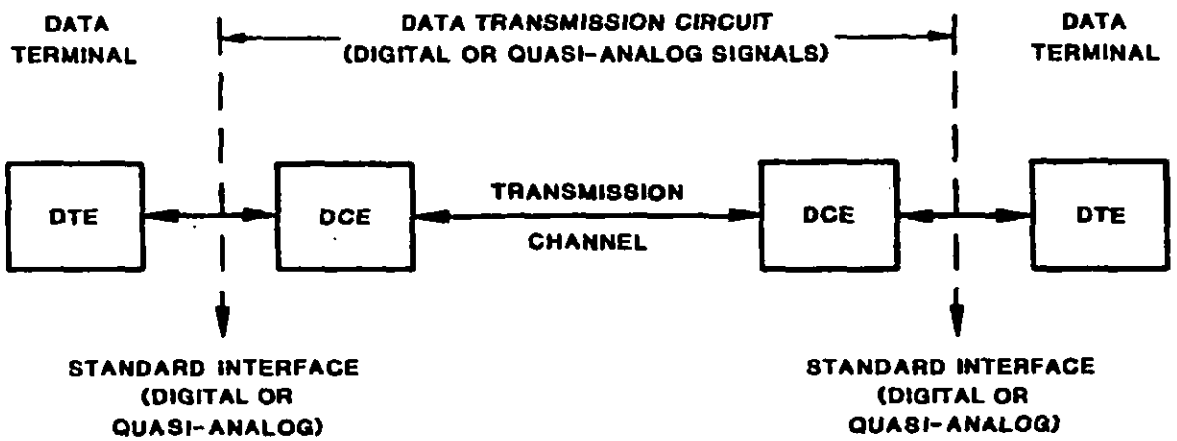

NOTES:

1. DTE = DATA TERMINAL EQUIPMENT;
   DCE = DATA CIRCUIT-TERMINATING EQUIPMENT.
2. DTE AND DCE MAY INCLUDE DATA ADAPTERS, MODEMS, ERROR CONTROL ALGORITHM, ENCRYPTION DEVICES, CONTROL UNITS AND OTHER EQUIPMENT, AS REQUIRED.
3. DTE AND DCE CAN BE COMBINED IN A SINGLE UNIT DEVICE.
4. THE TRANSMISSION CHANNEL MAY INCLUDE NODES AND SINGLE OR MULTICHANNEL TRANSMISSION EQUIPMENTS.
5. MODULATION RATES AND DATA SIGNALING RATES AT THE STANDARD INTERFACE ARE SPECIFIED IN 4.2.1.

FIGURE 1. Standard interface between data terminal equipment and data circuit-terminating equipment.

4.2.3 Digital interface characteristics. The electrical characteristics of the digital interface at the modulator input and the demodulator output shall be in accordance with the applicable requirements of military standard (MIL-STD)-188-114.

NOTE 1: The low-level digital interfaces (balanced and unbalanced configurations) contained in MIL-STD-188-100 have been superseded by MIL-STD-188-114.

NOTE 2: The high-level digital interface used in some facilities is nonstandard and must not be used for the design of new equipment, subsystems, and systems. Information about the high-level digital interface can be found in MIL-STD-188-100.

4.2.4 Terminal impedance for quasi-analog signals.

4.2.4.1 Modems used in multichannel subsystems. For modems used in long-haul systems and in tactical subsystem types I, II, and III (see table III), the terminal impedance at the modulator output and the demodulator input shall be 600 ohms, balanced to ground, with a minimum return loss of 26 decibels (dB) against a 600-ohm resistance over the frequency band of interest. The electrical symmetry shall be sufficient to suppress longitudinal currents to a level which is at least 40 dB below reference level (-40 dB referred to one milliwatt measured at zero transmission level point (dBm0)).

4.2.4.2 Modems used in single-channel radio subsystems. For modems used with radio equipment of single-channel radio subsystems, the terminal impedance at the modulator output shall be 150 ohms, unbalanced to ground, with a minimum return loss of 20 dB against a 150-ohm resistance over the frequency band of interest. The terminal impedance at the demodulator input shall be 600 ohms, balanced to ground, with a minimum return loss of 26 dB against a 600-ohm resistance over the frequency band of interest. The electrical symmetry shall be sufficient to suppress longitudinal currents to a level which is at least 40 dB below reference level (-40 dBm0).

NOTE: As a design objective (DO), the terminal impedance at the modulator output should be 600 ohms, balanced to ground, with a minimum return loss of 26 dB against a 600-ohm resistance over the frequency band of interest. The electrical symmetry should be sufficient to suppress longitudinal currents to a level which is at least 40 dB below reference level (-40 dBm0).

NOTE: A terminal impedance balanced to ground is recommended for equipment (radios, data modems, etc.) operating in an environment that has a high electromagnetic interference (EMI) level, such as in aircraft and tanks. Measurements have shown that an electrical noise-rejection improvement of up to 20 dB can be achieved for balanced terminations, compared with unbalanced terminations.

4.2.5 Quasi-analog signal levels.

4.2.5.1 Modems used in multichannel subsystems. For modems used in long-haul systems and in tactical subsystem types I, II, and III (see table III), the quasi-analog signal level at the modulator output shall be adjustable from at least -18 dB referred to one milliwatt (dBm) to +3 dBm. The difference in the output levels between the MARK and SPACE binary signals shall be less than 1 dB. The demodulator shall be capable of operating, without degradation of performance, with a received quasi-analog signal level ranging from at least -35 dBm to +3 dBm.

TABLE III. Tactical switched multichannel communications subsystems.

MIL-STD-188-200 terms	Probable maximum distance	Multiplexer equipment	TLP (4-wire trunk)	Test signal level	Test tone level	MIL-STD-188-100 terms
Tactical subsystem type I	300 km	FDM	0TLP	0 dBm0	-10 dBm0	Tactical highly maneuverable system
Tactical subsystem type II	300 km	TDM/PCM	-4TLP	0 dBm0	-3 dBm0	
		FDM*	-4TLP	0 dBm0	-3 dBm0	
Tactical subsystem type III	1800 km	FDM	0TLP	0 dBm0	-10 dBm0	Tactical less maneuverable system
Tactical subsystem type IV	1200 km	TDM/CVSD**	Not applicable			

*There is still older FDM equipment in the inventory. This equipment has been classified as belonging to tactical subsystem type II.

**Continuously variable slope delta (modulation) (CVSD)

a. For long-haul systems and tactical subsystem types I and III, the transmitted quasi-analog signal level of telegraph and data equipment (modem, multiplexer, etc.) shall be adjustable from at least -18 dBm to +3 dBm to provide -13 dBm0 (e.g., -13 dBm at a zero transmission level point (0TLP)) at the input terminals of a data trunk or switch. For multitone data signals, the level of each data tone with reference to -13 dBm, shall be equal to -13 - (10 log t), measured in dBm, where t is the number of tones.

b. For tactical subsystem type II, the transmitted quasi-analog signal level of telegraph and data equipment (modem, multiplexer, etc.), shall be adjustable from at least -18 dBm to +3 dBm to provide -6 dBm0 (e.g., -10 dBm at a -4TLP) at the input terminals of a data trunk or switch. For multitone data signals, the level of each data tone with reference to -10 dBm shall be equal to -10 - (10 log t), measured in dBm, where t is the number of tones.

NOTE 1: The formulas -13 - (10 log t) and -10 - (10 log t) assume a random phase distribution for the data tones of a multitone modem. The multitone phases may not be distributed randomly if the multitone signals are derived from a common frequency source. In such a case, the probability of tones adding in phase increases. This can cause the composite multitone signal to have a higher level than that given by the formulas and thus, could overload frequency-division multiplexing (FDM) equipment.

NOTE 2: The standard data level of -6 dBm0 applies also to time-division multiplexing/pulse code modulation (TDM/PCM) equipment even if this type of equipment is not subject to the same overload problems as FDM equipment. A data level that exceeds the standard level will cause clipping of the peak amplitudes of quasi-analog signals by the PCM equipment, resulting in unsatisfactory data transmission.

NOTE 3: The different transmitted quasi-analog signal level of tactical subsystem type II, as compared to the level of long-haul systems and tactical subsystem types I and III, requires a special method for interconnecting VF channels of tactical subsystem type II with VF channels of any of the other subsystems or systems. See MIL-STD-188-100 for details.

NOTE 4: Compliance with 4.2.5.1 does not require the quasi-analog signal level to be continuously adjustable. The specified signal level may be obtained in incremental steps, continuously, or by a combination of both methods. The methods of adjustment will be determined in applicable equipment specifications.

4.2.5.2 Modems used in single-channel radio subsystems. Standards for the quasi-analog signal levels of modulators and demodulators are documented in MIL-STD-188-141.

4.2.6 Clock equipment, control, and timing. Clock equipment, control, and timing for modems shall be in accordance with the applicable requirements in MIL-STD-188-100. All data modems shall have the capability to accept external timing signals.

4.3 General design requirements. The general design requirements of 4.3.1 through 4.3.2.3 involve documents outside of the mandatory MIL-STD-188 series. Extreme care must be used to ensure that the provisions, selected from these documents as applicable to a given design task, are tailored in accordance with the policies of Department of Defense (DOD) Directive 4120.21.

4.3.1 Federal maritime interoperability requirements. Ship-to-ship and shore-to-ship medium frequency (MF) and high frequency (HF) radio teletypewriter system (RATT) operation shall be in accordance with the requirements of FED-STD-1035.

4.3.2 International interoperability requirements.

4.3.2.1 Shore-to-ship broadcast systems. For interoperation with North Atlantic Treaty Organization (NATO) member nations, the electrical characteristics of data modems employed in shore-to-ship broadcast systems shall be in accordance with the applicable requirements of NATO Standardization Agreement (STANAG) 5031.

4.3.2.2 Maritime air communications systems. For interoperation with NATO member nations, the electrical characteristics of data modems employed in maritime air communication systems shall be in accordance with the applicable requirements of STANAG 5035.

4.3.2.3 Radio teletypewriter systems. For interoperation among American, British, Canadian, Australian (ABCA) armies, the electrical characteristics of data modems employed in HF and very high frequency (VHF) RATT operations shall comply with the applicable requirements of Quadripartite Standardization Agreement (QSTAG)-303.

NOTE: The applicable characteristics of data modems standardized in this document comply with STANAG 5031, STANAG 5035, and QSTAG-303.

5. DETAILED REQUIREMENTS

5.1 Frequency shift keying (FSK) data modulators-demodulators (modems) for single-channel radio equipment. Nondiversity FSK modems used primarily with single-channel (3 kHz) radio equipment shall comply with the applicable requirements of 4.2, 4.3, 5.1.1, 5.1.2, and 5.1.3.

NOTE: The waveform requirements in this paragraph apply when backward compatibility and interoperability are necessary.

Table IV shows characteristic frequencies of the various FSK modems for different radio channels.

TABLE IV. Characteristic frequencies of FSK data modems for single-channel radio equipment.

Channel	Mark frequency (Hz)	Center frequency (Hz)	Space frequency (Hz)
LF radio	915	1000	1085
MM radio	1615	1700	1785
HF radio	1575	2000	2425
UHF radio	500	600	700

5.1.1 Narrow-shift FSK modem. For single-radio operation with binary narrow-shift FSK modulation, a shift of 170 hertz (Hz) shall be used with the characteristic frequencies given in table IV. The tolerance of each characteristic frequency shall be ± 4 Hz.

5.1.2 Wide-shift FSK modem. For single-channel telegraph operation over high frequency (HF) radio links operating under 150 baud (Bd), the use of FSK with an 850-Hz shift is not consistent with the requirement that the U.S. operate its HF communication services in accordance with International Telecommunication Union (ITU) recommendations. However, where 850-Hz wide-shift FSK is used, the characteristic frequencies given in table IV shall apply. The tolerance of each characteristic frequency shall be ± 4 Hz.

5.1.3 Speech-plus-telegraph operation. For speech-plus-telegraph operation, the modem shall use binary FSK modulation with a shift of 85 Hz at the characteristic frequencies shown in table V. The tolerance of each characteristic frequency shall be ± 1 Hz.

TABLE V. Characteristic frequencies of FSK data modems for single-channel speech-plus-telegraph operation.

Parameters	Characteristic frequencies (Hz)
MARK frequency	2762.5
CENTER frequency	2805.0
SPACE frequency	2847.5

5.2 FSK data modems for voice frequency (VF) channel operation. Nondiversity FSK modems used primarily in point-to-point (switched or nonswitched) connections over VF channels shall comply with the applicable requirements of 4.2, 4.3, and 5.2.1 through 5.2.2.2. The modems shall exhibit a bit error ratio (BER) of not more than 1 bit error in 10^5 (design objective (DO): 10^6) data bits 99 percent of the time when operating over a military C1 type circuit as defined in Defense Communications Agency Circular (DCAC) 300-175-9. As a DO, during 99 percent of the time that the network is in use the user throughput should be equal to or greater than 50 percent.

5.2.1 FSK data modems for 150 bits per second (bps) or less. Nondiversity FSK modems used primarily for single-channel telegraph with data signaling rates of 150 bps or less shall comply with 5.2.1.1 through 5.2.1.4.

5.2.1.1 Operational characteristics. The modem shall be capable of 2-wire half-duplex and 4-wire full-duplex operation. When the modem is connected for 2-wire half-duplex operation, the modem shall be capable of generating a break-in signal (see 5.2.1.4) that stops the transmission from the remote modem and allows the direction of data flow to be reversed.

5.2.1.2 Modulation characteristics. The modem shall use binary FSK modulation with a shift of 85 Hz at the characteristic frequencies shown in table VI. The tolerance of each characteristic frequency shall be ±4 Hz. The modem shall have a ready means of reversing the signaling sense of MARK and SPACE conditions to facilitate interoperation with older modems.

NOTE: The characteristic frequencies specified in 5.2.1.2 for MARK and SPACE conditions are reversed in a large number of older modems.

TABLE VI. Characteristic frequencies of FSK data modems for 150 bps or less.

Parameters	Characteristic frequencies (Hz)
MARK frequency	1232.5
CENTER frequency	1275.0
SPACE frequency	1317.5

5.2.1.3 Carrier suppression. During periods of no transmission, the modulator output shall be removed automatically. The carrier suppression time delay shall be such that the modulator output persists for 2.5 seconds (s), ±0.5 s.

5.2.1.4 Break-in signal characteristics. The frequency of the break-in signal shall be 1180 Hz, ±3 Hz. The nominal level of the break-in signal shall be the same as the nominal level of the quasi-analog data signal at the modulator output. The break-in frequency detector of the demodulator shall operate with signal levels ranging at least from -35 decibels referred to one milliwatt (dBm) to -5 dBm.

5.2.2 FSK data modems for 1200 bps or less.

5.2.2.1 Modulation characteristics. The modem shall use phase-continuous FSK with a shift of 400 Hz for data signaling rates of 600 bps or less, and a shift of 800 Hz for a data signaling rate of 1200 bps. The characteristic frequencies shall comply with those listed in table VII and shall have a tolerance of ±5 Hz.

TABLE VII. Characteristic frequencies of FSK data modems for 1200 bps or less.

Parameters	Characteristic frequencies (in Hz) for 600 bps or less* (400-Hz shift)	Characteristic frequencies (in Hz) for 1200 bps only (800-Hz shift)
MARK frequency	1300	1300
CENTER frequency	1500	1700
SPACE frequency	1700	2100

*Standard modulation and data signaling rates are given in 4.2.1.

5.2.2.2 Modulator output spectrum. The transmitted spectrum energy of the quasi-analog signal, measured at the modulator output, shall be suppressed for all frequencies above 3400 Hz to a level which is at least 40 decibels (dB) below the level of the maximum spectrum energy. This requirement shall apply to all modulation rates for which the modem was designed.

5.3 HF data modems. The serial (single-tone) transmit waveform described in this paragraph establishes the minimum essential interoperability and performance requirements for new HF modems.

5.3.1 General requirements.

5.3.1.1 Capability. The HF modems shall be capable of modulating and demodulating serial binary data into/from a serial (single-tone) waveform. This waveform is transmitted/received over HF radio operating in either fixed-frequency or frequency-hopping modes of operation. The minimum acceptable performance and joint service interoperability shall be at 75, 150, 300, 600, 1200 and 2400 bps using the fixed-frequency phase shift keying (PSK) serial waveform specified herein. Uncoded serial tone modem operation at 4800 bps is a design objective (DO).

5.3.1.2 Voice digitization. When integrated within the data modem, voice digitization functions shall be in accordance with North Atlantic Treaty Organization (NATO) Standardization Agreement (STANAG) 4198.

5.3.1.3 Optional modes. As a DO, the modem should be expandable to include one or more of the following optional modes:

a. NATO mode. If included, this mode shall be in accordance with STANAG 4285.

b. Binary frequency-shift keying (FSK) mode. If included, this mode shall be in accordance with 5.1.

c. Advanced narrowband digital voice terminal (ANDVT) (thirty-nine tone) mode. If included, this mode shall be in accordance with MIL-C-28883 and STANAG 4197.

d. Sixteen-tone differential phase-shift keying (DPSK) mode. If included this mode shall be in accordance with appendix A.

e. Thirty-nine-tone DPSK mode. If included, this mode shall be in accordance with appendix B.

f. Sixteen-tone DPSK mode for digital data applications. If included, the mode shall be in accordance with MIL-C-28883.

g. Frequency-hopping mode. If included, this mode shall be in accordance with the PSK serial (single-tone) waveform contained herein and the data training and timing format provided in a revision of MIL-STD-188-148 (Appendix D).

5.3.1.4 Interface requirements.

5.3.1.4.1 Line-side data characteristics. Line-side data interfaces shall be in accordance with MIL-STD-188-114.

5.3.1.4.2 Equipment-side characteristics. Modems shall be designed to provide the required performance (see 5.3.2.5) using the single-channel bandwidth and characteristics as given in MIL-STD-188-141. As a DO, modems should be capable of transmitting and receiving the quasi-analog signals over unconditioned 3-kHz VF lines while maintaining the performance established in 5.3.2.5.

5.3.2 Serial (single-tone) mode.

5.3.2.1 General. This mode shall employ M-ary phase-shift keying (PSK) on a single carrier frequency as the modulation technique for data transmission. Serial binary information accepted at the line-side input is converted into a single 8-ary PSK-modulated output carrier. The modulation of this output carrier shall be a constant 2400-symbols-per-second waveform regardless of the actual throughput rate. The rate-selection capability shall be as given in 5.3.1.1. Selectable interleaver settings shall be provided. This waveform (signal structure) has four functionally distinct, sequential transmission phases. These time phases are:

a. Synchronization preamble phase.

b. Data phase.

c. End-of-message (EOM) phase.

d. Coder and interleaver flush phase.

NOTE: Unless otherwise specified, the included serial (single-tone) waveform requirements apply to both the fixed-frequency and frequency-hopping modes of operation.

5.3.2.2 Sequencing of time phases. Figure 2 illustrates the functional block diagram for fixed-frequency and frequency-hopping operation.

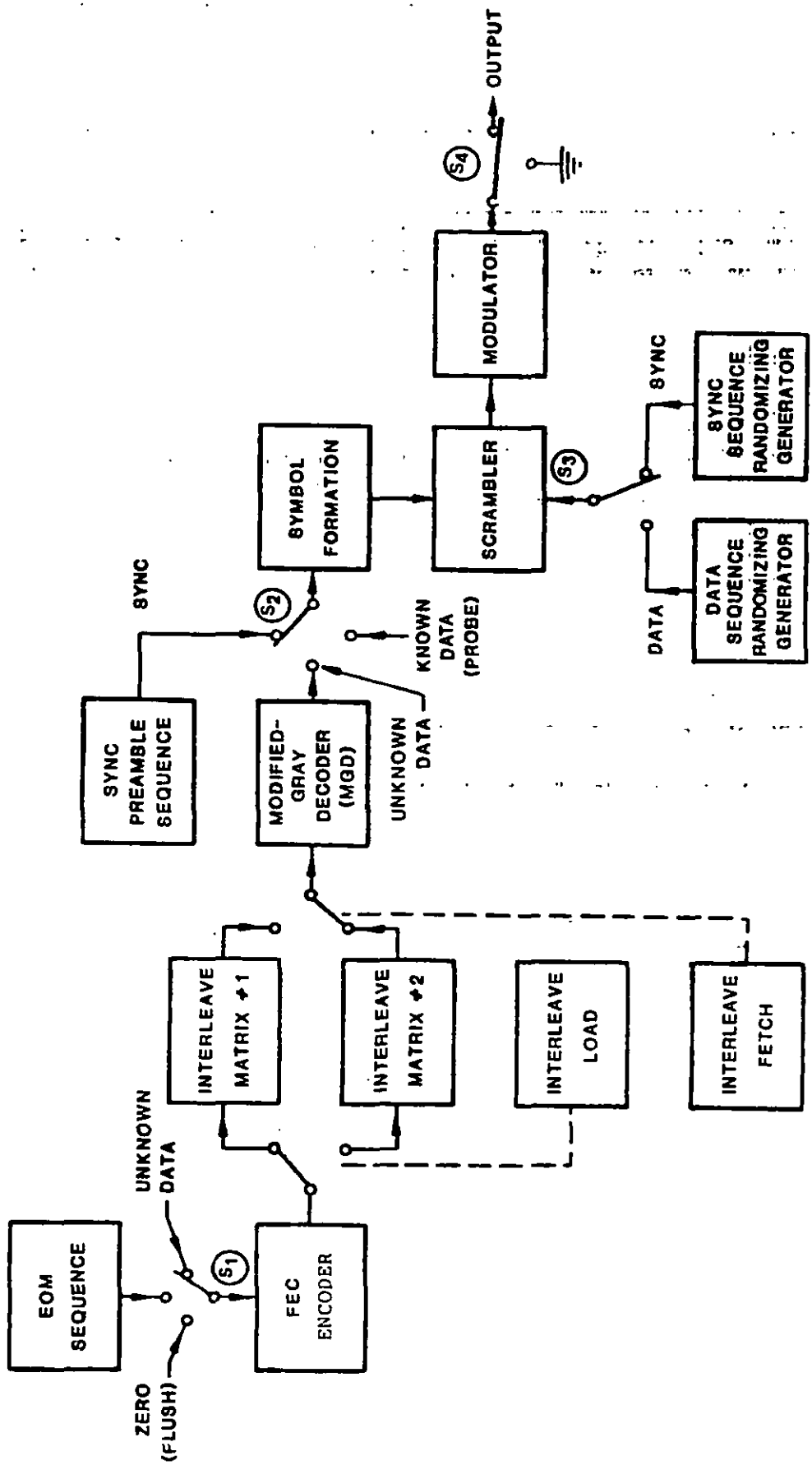

FIGURE 2. Serial (single-tone) waveform functional block diagram.

5.3.2.2.1 Synchronization (sync) preamble phase. The duration of the sync preamble phase shall correspond to the exact time required to load the selected interleaver matrix when an interleaver is present, with one block of data. During this phase, switch S1 (see figure 2) shall be in the UNKNOWN DATA position and the encode and load interleave functions shall be active as the modem begins accepting data from the data terminal equipment (DTE). Switches S2 and S3 shall be in the SYNC position. The transmitting modem shall send the required sync preamble sequence (see 5.3.2.3.7.2) to achieve time and frequency sync with the receiving modem. The length of the sync preamble sequence pattern shall be 0.6 s for the zero interleaver setting (this requires that a 0.6-s buffer be used to delay data traffic during the sync preamble transmission), 0.6 s for the short interleaver setting, and 4.8 s for the long interleaver setting. For radio frequency-hopping operation, S4 and the data fetch controller shall provide the required traffic dead time at the beginning of each hop by disabling the modem output. The dead time shall be equal to the duration of 96 symbols. Switch S4 shall be placed in the through position during fixed-frequency operation. Referring to figure 3, the sequence of events for synchronous and asynchronous operation is as follows:

a. For fixed-frequency, full-duplex data operation, upon receipt of the message request-to-send (RTS) signal from the DTE, the modem shall simultaneously perform the following:

(1) return to the DTE a clear-to-send (CTS) signal,

(2) begin loading the interleaver with data traffic, and

(3) commence sending the special sync preamble pattern described in 5.3.2.3.7.2 and 5.3.2.3.8.2.

b. For fixed-frequency half-duplex (one-way reversible) data operation using radio equipment without automatic link establishment (ALE) capability, the radio set transmitter shall be keyed first, then the sequence of events shall be identical to that given for fixed-frequency full-duplex operation.

c. Fixed-frequency half-duplex data operation using ALE radio equipment shall incorporate a method of delaying the data CTS signal until radio link confirmation. In an example of this operation, upon receipt of the RTS signal from the user data terminal, the controller first initiates and confirms linking with the called station. During this link confirmation period, the RTS signal is controlled and delayed in the controller until the link is confirmed. After link confirmation, the controller sends the RTS signal to the modem. (In effect, the delaying of the RTS signal provides the needed delay of the data CTS signal.) Upon receipt of the RTS signal from the controller, the modem shall simultaneously perform the following:

(1) key the radio,

(2) return to the DTE a CTS signal,

(3) begin loading the interleaver with data traffic, and

(4) commence sending the special sync pattern described in 5.3.2.3.7.2 and 5.3.2.3.8.2.

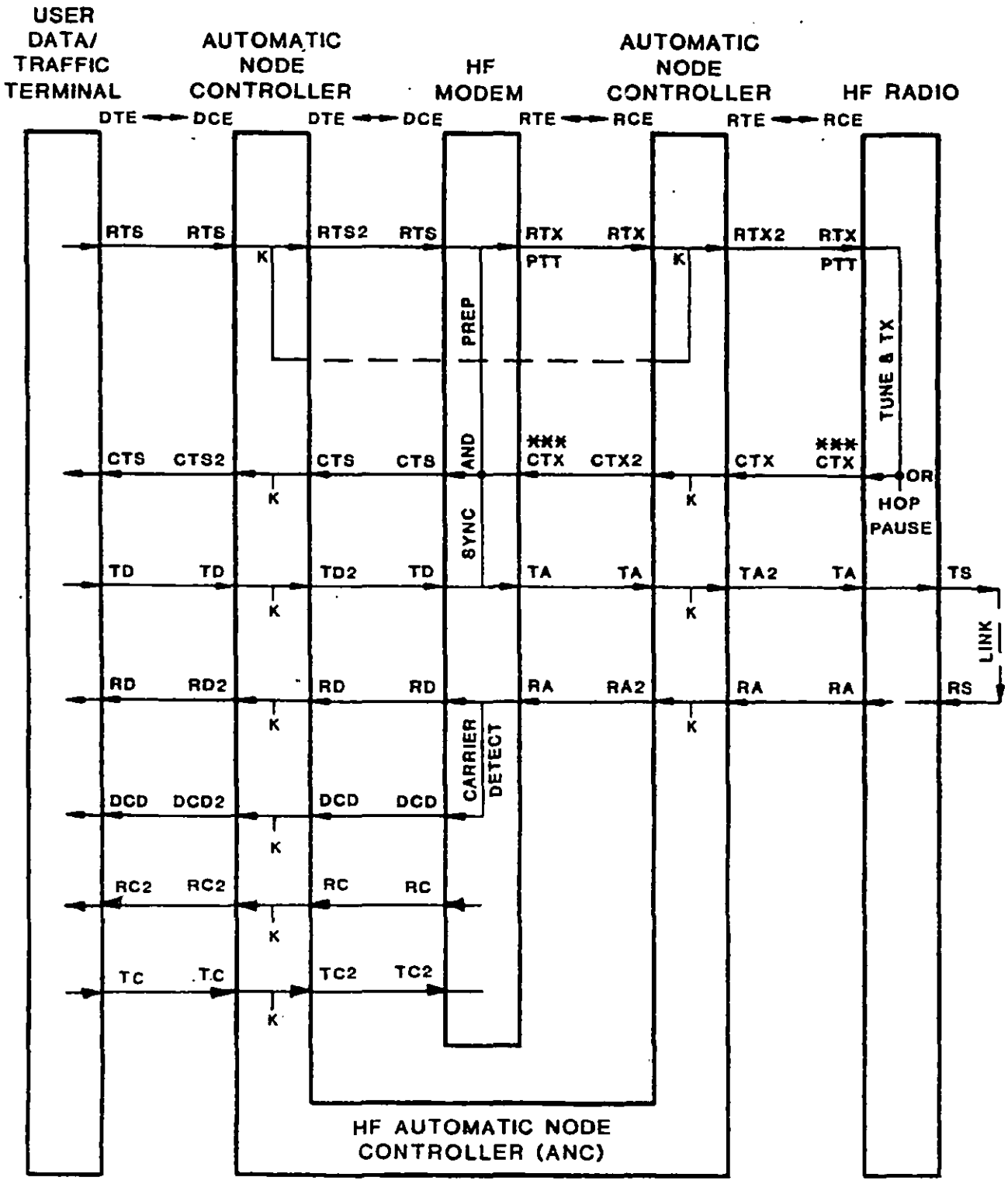

FIGURE 3. An example of equipment interface block diagram.

LEGEND:

*** INDICATES A NECESSARY INTERFACE WHICH IS NOT PRESENTLY DEFINED AND REQUIRED IN PRESENT EQUIPMENTS AND STANDARDS, AND MUST BE INCORPORATED.

ANC	AUTOMATIC NODE CONTROLLER
AND	LOGICAL AND, ALL (AVAILABLE) INPUTS MUST BE TRUE TO OBTAIN A TRUE OUTPUT
CTS	CLEAR TO SEND
CTX	CLEAR TO TRANSMIT (TRANSMITTER TUNED AND ON)
CTX2	CTX CONTROLLED THROUGH ANC
DCD	DATA CARRIER DETECT (RECEIVED DATA CARRIER DETECTION)
DCD2	DCD CONTROLED THROUGH ANC
DCE	DATA CIRCUIT-TERMINATING EQUIPMENT
DTE	DATA TERMINAL EQUIPMENT
HOP PAUSE	COMMAND TO PAUSE (TRANSMIT DATA) WHILE RADIO CHANGES FREQUENCY
K	INDICATES HF AUTOMATIC NODE CONTROLLER (ANC) CONTROL, WHICH MAY ALSO INCLUDE MONITORING AND/OR INJECTION.
LINK	HF RADIO LINK, INCLUDING DISTANT STATION AND PROPAGATION
OR	LOGICAL OR, SOME (AVAILABLE) INPUTS MUST BE TRUE TO OBTAIN A TRUE OUTPUT
PREP	PREPARATION TO ACCEPT AND SEND DATA, AND KEY TRANSMITTER
PTT	PUSH TO TALK (KEY TRANSMITTER ON)
RA	RECEIVE AUDIO
RA2	RA CONTROLLED THROUGH ANC
RC	RECEIVE CLOCK
RC2	RECEIVE CLOCK CONTROLLED THROUGH ANC
RCE	RADIO COMMUNICATIONS EQUIPMENT
RD	RECEIVE DATA
RD2	RD CONTROLLED THROUGH ANC
RS	RECEIVE (HF RADIO) SIGNAL
RTE	RADIO TERMINAL EQUIPMENT
RTS	REQUEST TO SEND
RTS2	RTS CONTROLLED THROUGH ANC
RTX	REQUEST TO TRANSMIT
RTX2	RTX CONTROLLED THROUGH ANC
SYNC	SYNCHRONIZATION FOR DATA TRANSMISSION
TA	TRANSMIT AUDIO
TA2	TA CONTROLLED THROUGH ANC
TC	TRANSMIT CLOCK
TC2	TRANSMIT CLOCK CONTROLLED THROUGH ANC
TD	TRANSMIT DATA
TD2	TD CONTROLLED THROUGH ANC
TS	TRANSMIT (HF RADIO) SIGNAL
TUNE	TUNING OF THE TRANSMITTER AND ANTENNA SYSTEM BEFORE TRANSMIT
TX	TRANSMIT (HF RADIO ON AND READY TO SEND DATA)

FIGURE 3. An example of equipment interface block diagram - Continued.

d. For frequency-hopping data operation, the modem shall, upon receipt of the RTS signal from the DTE input device, simultaneously perform the following:

(1) key the radio,

(2) return a data CTS signal to the DTE,

(3) commence loading the interleaver, and

(4) wait for the radio clear-to-transmit (CTX) signal. In no case shall the radio CTX signal occur later than 2.4 seconds after receipt of the data CTS signal. This requires, in addition to an interleaver buffer, a buffer of at least 2.45 times the highest data rate used.

NOTE: This additional buffer shall be bypassed during fixed-frequency operation.

Upon receipt of the radio CTX, the transmitting modem shall then commence sending the sync pattern as given in 5.3.2.3.7.2 and 5.3.2.3.8.2, and will use the data framing and timing format to be provided in a revision of MIL-STD-188-148 (Appendix D).

NOTE: The interleaver fetch and modified-Gray decoding functions are not active during this phase. All received data prior to entry into the data phase must be buffered by the modem. The radio CTX signal can originate from either the radio set itself or, if using ALE radio equipment, an ALE controller.

5.3.2.2.2 Data phase. During the data phase, the transmit waveform shall contain both message information (UNKNOWN DATA) and channel probes (KNOWN DATA), that is, training bits reserved for channel equalization by the distant receive modem. Function switches S1 and S3 (figure 2) are in the UNKNOWN DATA and DATA position, respectively, and switch S2 toggles between the UNKNOWN DATA (modified-Gray decoder (MGD) output) and the KNOWN DATA (probe) positions. The probe shall consist of zeros, D1, and D2 (D1 and D2 are defined in 5.3.2.3.7.1.2). The period of dwell in each switch position shall be as follows:

a. For frequency-hopping operation, the dwell is a function of bit rate and time duration of the hop. A revision of MIL-STD-188-148 (Appendix D) will give the required timing of switches S2 and S4 during each hop time as a function of data rate and dead time.

b. For fixed-frequency operation, the period of dwell shall be a function of bit rate only. At 2400 and 4800 bps, there shall be a 32-symbol duration in the UNKNOWN DATA position followed by a 16-symbol duration in the KNOWN DATA position. At 150, 300, 600, and 1200 bps, the two durations shall be 20 symbols in each position. At 75 bps, switch S2 shall remain in the UNKNOWN DATA position. Data transfer operation shall be terminated by removal of the RTS signal by the input DTE.

NOTE: In all cases, switch S2 is placed in the UNKNOWN DATA position first, following the end of the sync preamble phase.

5.3.2.2.3 EOM phase. When the last UNKNOWN DATA bit prior to the absence of the RTS signal has entered the forward error correction (FEC) encoder, S1 (figure 2) shall be switched to the EOM position. This shall cause a fixed 32-bit pattern (see 5.3.2.3.1) to be sent to the FEC encoder. Function switches S2 and S3 (and also S4 in frequency-hopping operation) shall continue to operate as established for the data phase.

5.3.2.2.4 FEC coder and interleaver flush phase. Immediately upon completion of the EOM phase, S1 (figure 2) shall be switched to the FLUSH position causing input of flush bits (see 5.3.2.3.2) to the FEC encoder.

5.3.2.3 Functional descriptions. The following subparagraphs provide figure 2 block descriptions.

5.3.2.3.1 EOM sequence. The EOM sequence shall be represented by the eight-digit hexadecimal number, 4B65A5B2. The bits shall be transmitted with the most significant digit first. Thus the first eight bits are, left to right, 0100 1011.

5.3.2.3.2 Interleaver flush. If an interleaver is used, the duration of the flush phase shall be 144 bits (for coder flush) plus enough bits to complete transmission of the remainder of the interleaver matrix data block (see 5.3.2.3.4 for data block size) containing the last coder flush bit. Flush bits shall be set to "0". If the interleaver is in a bypass (0.0 s) state, only the coder flush bits are transmitted.

NOTE: This causes the transmission of enough flush bits to allow effective flushing of the FEC decoder and the deinterleaver at the receiving modem.

5.3.2.3.3 FEC encoder. The FEC encoder shall be used for data rates up to and including 2400 bps. The FEC encoder block diagram for frequency-hopping and fixed-frequency operation is shown on figure 4.

a. For frequency-hopping operation, the FEC encoder function shall be accomplished by a constraint length 7 convolutional coder with repeat coding used at the 75-, 150-, and 300-bps rates. The two summing nodes on the figure represent modulo 2 addition. For each bit input to the encoder, two bits shall be taken as output from the encoder, the upper output bit $T_1(x)$ being taken first. For the 2400-bps rate, every fourth bit (the second value of $T_2(x)$) shall be omitted at the interleaver output to form a punctured rate 2/3 convolutional rate. At all other rates, the convolutional coder shall be rate 1/2. Coded bit streams of 3600, 2400, and 1200 bps shall be generated for the input data rates of 2400, 1200, and 600 bps, respectively. For the 300-, 150-, and 75-bps input data rates, a 1200 bps coded bit stream shall be generated by repeating the pairs of output bits the appropriate number of times. The bits shall be repeated in pairs rather than repetitions for the first, $T_1(x)$, followed by repetitions of the second $T_2(x)$. Error-correction coding for frequency-hopping operation shall be in accordance with table VIII.

TABLE VIII. Error-correcting coding, frequency-hopping operation.

Data rate (bps)	Effective code rate	Method for achieving the code rate
2400	2/3	Rate 2/3 punctured convolutional code
1200	1/2	Rate 1/2 code
600	1/2	Rate 1/2 code
300	1/4	Rate 1/2 code repeated 2 times
150	1/8	Rate 1/2 code repeated 4 times
75	1/16	Rate 1/2 code repeated 8 times

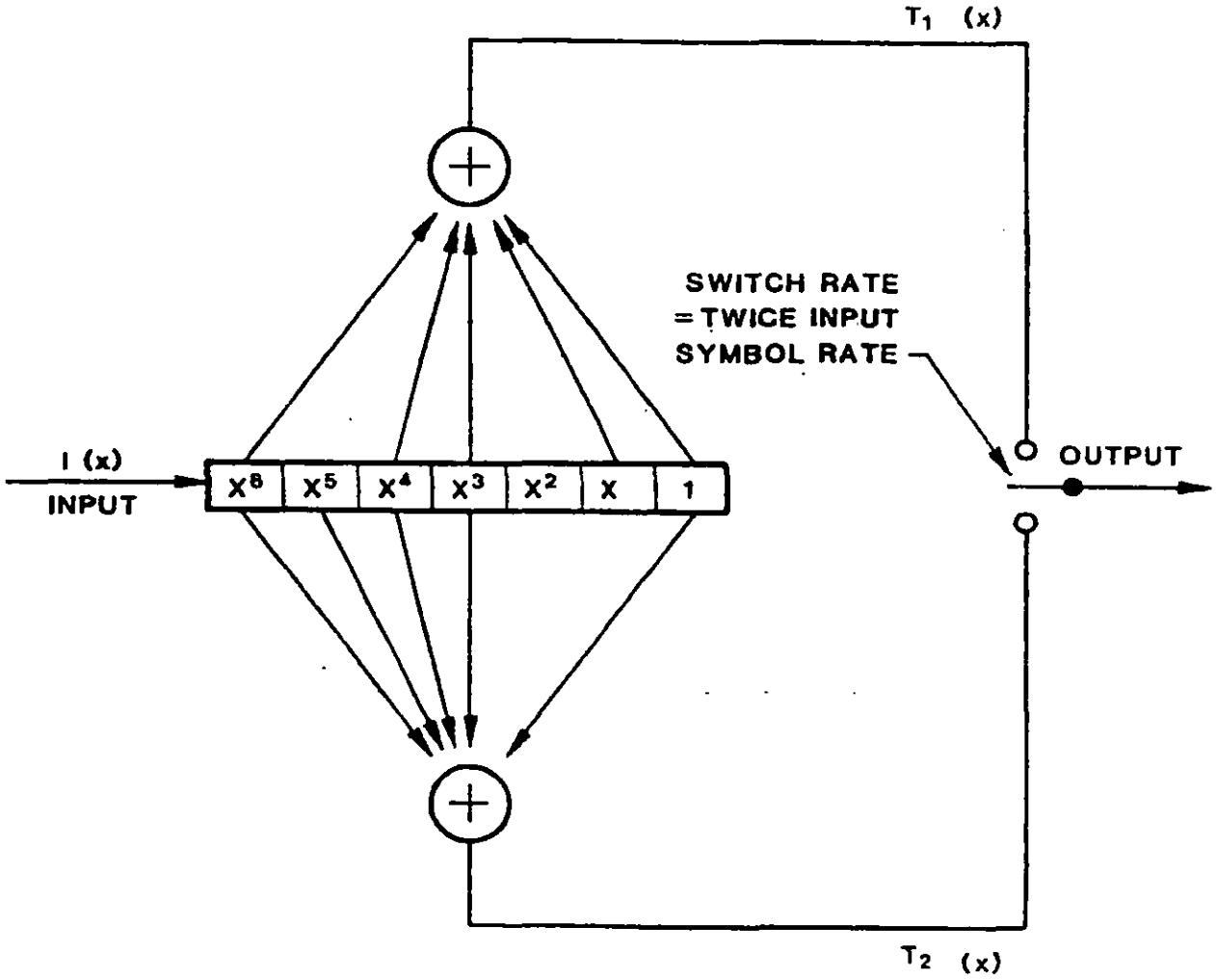

CONSTRAINT LENGTH = 7

GENERATOR POLYNOMIALS:

FOR T_1 $X^6 + X^4 + X^3 + X + 1$

FOR T_2 $X^6 + X^5 + X^4 + X^3 + 1$

FIGURE 4. FEC encoder block diagram.

b. For fixed-frequency operation, the FEC encoder function shall be accomplished by a single rate 1/2 constraint length 7 convolutional coder with repeat coding used at 150 and 300 bps. The two summing nodes shall operate as given for frequency-hopping operation; that is, for each bit input to the encoder, two bits shall be taken as output from the encoder. Coded bit streams of 4800, 2400, and 1200 bps shall be generated for input data rates of 2400, 1200, and 600 bps, respectively. For 300-bps and 150-bps input data rates, a 1200-bps coded bit stream shall be generated by repeating the pairs of output bits the appropriate number of times. The bits shall be repeated in pairs rather than repetitions for the first, $T_1(x)$, followed by repetitions of the second $T_2(x)$. At 75 bps, a different transmit format (see 5.3.2.3.7.1.1) is used and the effective code rate of 1/2 shall be employed to produce a 150-bps coded stream. Error-correction coding for fixed-frequency operation shall be in accordance with table IX.

TABLE IX. Error-correcting coding, fixed-frequency operation.

Data rate (bps)	Effective code rate	*Method for achieving the code rate*
4800	(no coding)	(no coding)
2400	1/2	Rate 1/2
1200	1/2	Rate 1/2 code
600	1/2	Rate 1/2 code
300	1/4	Rate 1/2 code repeated 2 times
150	1/8	Rate 1/2 code repeated 4 times
75	1/2	Rate 1/2

c. For 4800-bps fixed-frequency operation, the FEC encoder shall be bypassed.

5.3.2.3.4 Interleave load. The interleaver, when used, shall be a matrix block type which operates upon input bits. The matrix size shall accommodate block storage of 0.0, 0.6, or 4.8 s of receiving bits (depending on whether the zero, short, or long interleave setting is chosen) at all required data rates. Because the bits are loaded and fetched in different orders, two distinct interleave matrices shall be required.

NOTE: This allows one block of data to be loaded while the other is being fetched. The selection between the long and short interleaver is contained in the transmitted sync pattern (5.3.2.3.7.2). The short interleaver shall be switch selectable to be either 0.0 or 0.6 s (see 5.3.2.3.7.2.1).

To maintain the interleave delay at a constant value, the block size shall be scaled by bit rate. Table X lists the interleave matrix dimensions (rows and columns) that shall be allocated for each required bit rate and interleave delay.

NOTE: For frequency-hopping operation at rates of 300, 150, and 75 bps, the number of bits required for a constant time delay is the same as that for 600 bps due to repeat coding. For fixed-frequency operation, repeat coding is used with only the 300-bps and 150-bps rates.

Unknown data bits shall be loaded into the interleaver matrix starting at column zero as follows: the first bit is loaded into row 0, the next bit is loaded into row 9, the third bit is loaded into row 18, and the fourth bit into row 27. Thus, the row location for the bits increases by 9 modulo 40. This process continues until all 40 rows are loaded. The load then advances to column 1 and the process is repeated until the matrix block is filled. This procedure shall be followed for both long and short interleave settings.

NOTE: The interleaver shall be bypassed for 4800-bps fixed-frequency operation.

For fixed-frequency operation at 75 bps only, the following changes to the above description shall apply:

a. When the interleave setting is on long, the procedure is the same, but the row number shall be advanced by 7 modulo 20.

b. When the interleave setting is on short, the row number shall be advanced by 7 modulo 10. If the short interleaver is selected and the short interleaver setting is 0.0 s, the interleaver shall be bypassed.

TABLE X. Interleaver matrix dimensions.

	Long interleaver		Short interleaver	
Bit rate (bps)	Number of rows	Number of columns	Number of rows	Number of columns
2400	40	576	40	72
1200	40	288	40	36
600	40	144	40	18
300	40	144	40	18
150	40	144	40	18
75H	40	144	40	18
75N	20	36	10	9

NOTE: H = frequency-hopping operation, N = fixed-frequency operation.

5.3.2.3.5 Interleave fetch. The fetching sequence for all rates shall start with the first bit being taken from row zero, column zero. The location of each successive fetched bit shall be determined by incrementing the row by one and decrementing the column number by 17 (modulo number of columns in the interleaver matrix). Thus, for 2400 bps with a long interleave setting, the second bit comes from row 1, column 559, and the third bit from row 2, column 542. This interleaver fetch shall continue until the row number reaches the maximum value. At this point, the row number shall be reset to zero, the column number is reset to be one larger than the value it had when the row number was last zero and the process continued until the entire matrix data block is unloaded. The interleaver fetch process shall be the same for frequency-hopping and fixed-frequency operation except as follows:

a. For frequency-hopping operation (as stated in 5.3.2.3.3), the puncture process at 2400 bps shall occur during the fetch routine by omitting every fourth bit from the interleaver output.

b. For fixed-frequency operation at the 75-bps rate, the interleaver fetch is similar except the decrement value of the column number shall be 7 rather than 17.

The bits obtained from the interleaver matrix shall be grouped together as one-, two-, or three-bit entities that will be referred to as channel symbols. The number of bits that must be fetched per channel symbol shall be a function of bit rate as given in table XI.

TABLE XI. Bits-per-channel symbol.

Data rate (bps)	Number of bits fetched per channel symbol
2400	3
1200	2
600	1
300	1
150	1
75H	1
75N	2

NOTE: H = frequency-hopping operation, N = fixed-frequency operation.

5.3.2.3.6 Modified-Gray decoder (MGD). At 4800 and 2400 bps, the channel bits are effectively transmitted with 8-ary channel symbols. At 1200 bps and 75 bps (fixed frequency), the channel bits are effectively transmitted with 4-ary channel symbols.

NOTE: The purpose of decoding the bits from the interleaver matrix (through the MGD) is to guarantee that only one bit is in error when symbol errors involving adjacent phases are made at the receiving demodulator.

Modified-Gray decoding of the 2400-bps, 4800-bps (tribit), and 75 bps (fixed frequency) 1200-bps (dibit) channel symbols shall be in accordance with tables XII and XIII respectively. When one-bit channel symbols are used (600-150 bps, and 75 bps (frequency-hopping operation)) the MGD does not modify the unknown data bit stream.

TABLE XII. Modified-Gray decoding at 2400 bps and 4800 bps.

Input bits			
First bit	Middle bit	Last bit	Modified-Gray decoded value
0	0	0	000
0	0	1	001
0	1	0	011
0	1	1	010
1	0	0	111
1	0	1	110
1	1	0	100
1	1	1	101

TABLE XIII. Modified-Gray decoding at 75 bps (fixed frequency) and 1200 bps.

Input bits		
First bit	Last bit	Modified-Gray decoded value
0	0	00
0	1	01
1	0	11
1	1	10

5.3.2.3.7 Symbol formation. The function of symbol formation is one of mapping the one-, two-, or three-bit channel symbols from the MGD or from the sync preamble sequence into tribit numbers compatible with transmission using an 8-ary modulation scheme. The mapping process is discussed separately for data and preamble transmissions.

5.3.2.3.7.1 Symbol formation for data transmission. Channel symbols shall be fetched from the interleaver only during the portion of time that unknown symbols are to be transmitted. For all frequency-hopping and fixed-frequency operation data rates, the output of the symbol formation shall be scrambled with pseudorandom three-bit numbers. This scrambled waveform shall appear to be 8-ary tribit numbers regardless of operational throughput bit rates. The relationship of tribit numbers (0-7) to the transmitted phase of the waveform is further defined in 5.3.2.3.9.

5.3.2.3.7.1.1 Unknown data. At all frequency-hopping operation rates and rates above 75 bps for fixed-frequency operation, each one-, two-, or three-bit channel symbol shall map directly into one of the 8-ary tribit numbers as shown on the state constellation diagram, figure 5. When one-bit channel symbols are used (600-150 bps, and 75 bps (frequency-hopping)), the symbol formation output shall be tribit numbers 0 and 4. At the 1200-bps rate, the dibit channel symbol formation shall use tribit numbers 0, 2, 4, and 6. At the 4800-bps and 2400-bps rates, all the tribit numbers (0-7) shall be used for symbol formation. At 75-bps fixed-frequency operation, the channel symbols shall consist of two bits for 4-ary channel symbol mapping. Unlike the higher rates, no known symbols (channel probes) shall be transmitted and no repeat coding shall be used. Instead, the use of 32 tribit numbers shall be used to represent each of the 4-ary channel symbols. The mapping that shall be used is given in table XIV. The mapping in table XIVa shall be used for all sets of 32 tribit numbers with the exception of every 45th set (following the end of the sync pattern) if short interleave is selected, and every 360th set (following the end of sync pattern) if long interleave is selected. These exceptional sets, every 45th set for short interleave and every 360th set for long interleave, shall use the mappings of table XIVb. In any case, the resultant output is one of four orthogonal waveforms produced for each of the possible dibits of information. As before, these values will be scrambled later to take on all 8-phase states.

NOTE: Each set consists of 32 tribit numbers. The receive modem shall use the modification of the known data at interleaver boundaries to synchronize without a preamble and determine the correct data rate and mode of operation.

5.3.2.3.7.1.2 Known data. During the periods where known (channel probe) symbols are to be transmitted, the channel symbol formation output shall be set to 0 (000) except for the two known symbol patterns preceding the transmission of each new interleaver block. The block length shall be 1440 tribit channel symbols for short interleave setting and 11520 tribit channels symbols for the long interleave setting. When the two known symbol patterns preceding the transmission of each new interleaver block are transmitted, the 16 tribit symbols of these two known symbol patterns shall be set to D1 and D2, respectively, as defined in table XV of 5.3.2.3.7.2.1 and table XVII of 5.3.2.3.7.2.2. The two known symbol patterns are repeated twice rather than four times as they are in table XVII to produce a pattern of 16 tribit numbers. In cases where the duration of the known symbol pattern is 20 tribit symbols, the unused last four tribit symbols shall be set to 0 (000).

NOTE: When zero interleaver setting is selected, the pattern associated with the 0.6-s block is used. When 4800-bps operation is selected, the pattern associated with the short interleaver setting is selected.

TABLE XIV. Channel symbol mapping for 75 bps.

Channel symbol	Tribit numbers
a. Mapping for normal sets.	
00	(0000) repeated 8 times
01	(0404) repeated 8 times
10	(0044) repeated 8 times
11	(0440) repeated 8 times
b. Mapping for exceptional sets.	
00	(0000 4444) repeated 4 times
01	(0404 4040) repeated 4 times
10	(0044 4400) repeated 4 times
11	(0440 4004) repeated 4 times

5.3.2.3.7.2 Sync preamble sequence.

5.3.2.3.7.2.1 General. The waveform for synchronization is essentially the same for all data rates. The synchronization pattern shall consist of either three or twenty-four 200-millisecond (ms) segments (depending on whether either zero, short, or long interleave periods are used). Each 200-ms segment shall consist of a transmission of 15 three-bit channel symbols as described in 5.3.2.3.7.2.2. The sequence of channel symbols shall be: 0, 1, 3, 0, 1, 3, 1, 2, 0, D1, D2, C1, C2, C3, 0.

The three-bit values of D1 and D2 shall designate the bit rate and interleave setting of the transmitting modem. Table XV gives the assignment of these values. Again, the short interleave can be selected to either 0.0 (bypassed) or 0.6 s.

NOTE: The short interleave generally should be set to 0.6 s. If the 0.0-s interleave is selected, coordination with the distant terminal must be made before transmitting data. An automatic feature of selection between the 0.0-s and 0.6-s interleaver for both transmitter and receiver is a DO.

The three count symbols C1, C2, and C3 shall represent a count of the 200-ms segments starting at 2 for the zero and short sync (interleave) setting cases and 23 for the long sync (interleave) case. The count in either case shall start at the value established by the sync case setting and count down each segment to zero. The values shall be read as a six-bit word (C1, C2, C3), where C1 contains the most significant two bits. The two-bit values of each C (C1, C2, C3) shall be converted to three-bit values. This is done by adding a "1" before the two-bit value so that this "1" becomes the most significant bit. This conversion shall be as shown in table XVI.

NOTE: The converted count of 23 (010111) would have values of 5, 5, and 7 for C1, C2, and C3, respectively.

TABLE XV. Assignment of designation symbols D1 and D2:

Bit rate	Short interleave D1	Short interleave D2	Long interleave D1	Long interleave D2
4800	7	6	-	-
2400 (Secure voice)	7	7	-	-
2400 (Data)	6	4	4	4
1200	6	5	4	5
600	6	6	4	6
300	6	7	4	7
150	7	4	5	4
75	7	5	5	5

TABLE XVI. Conversion of two-bit count value to three-bit symbol.

Two-bit count value	Three-bit sync symbol
00	4 (100)
01	5 (101)
10	6 (110)
11	7 (111)

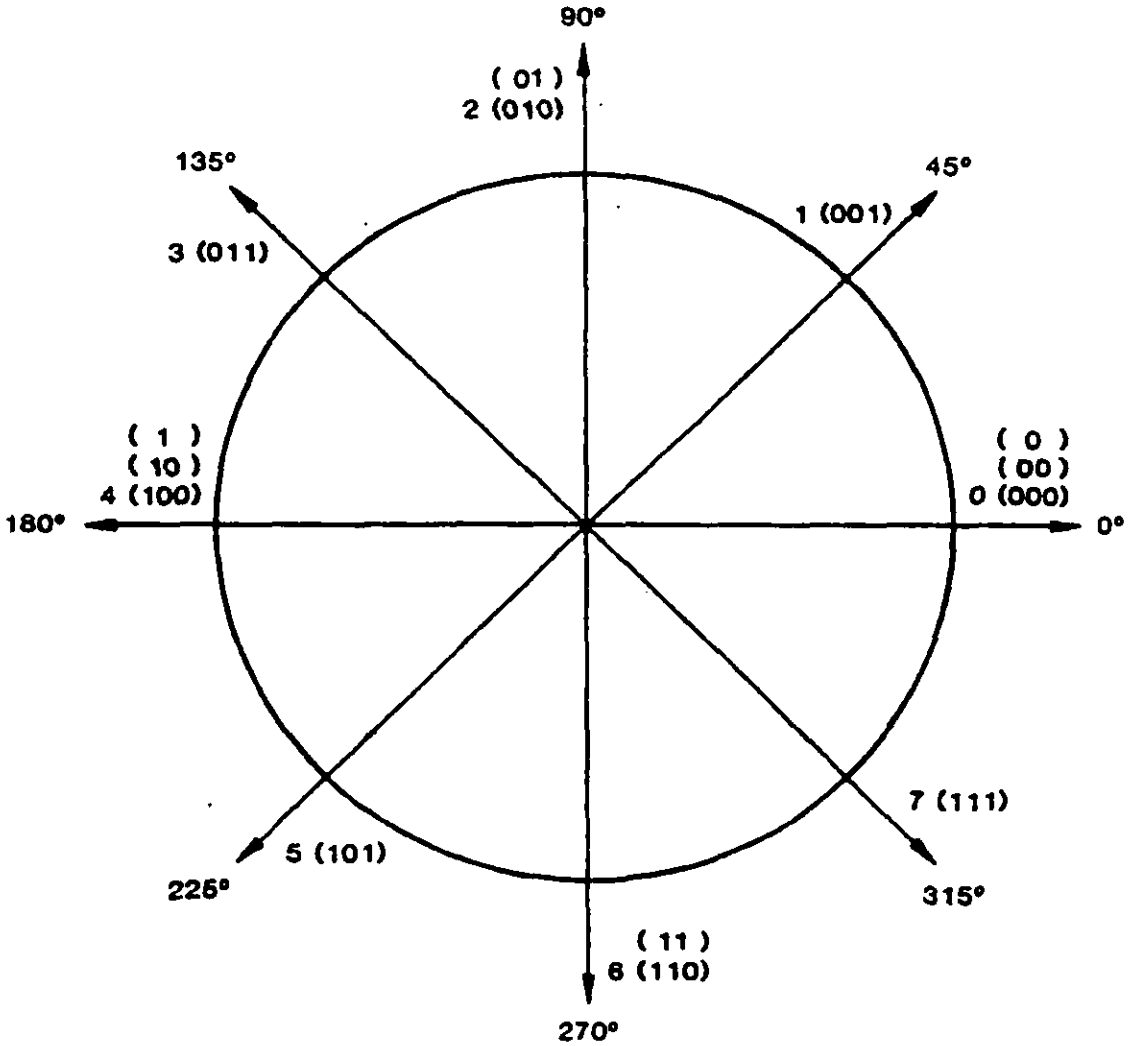

LEGEND:

0°. . . 315° = PHASE (DEGREES)

0 . . . 7 = TRIBIT NUMBERS

(000) . . . (111) = THREE-BIT CHANNEL SYMBOLS

(00) . . . (11) = TWO-BIT CHANNEL SYMBOLS

(0) . . . (1) = ONE-BIT CHANNEL SYMBOLS

FIGURE 5. State constellation diagram.

5.3.2.3.7.2.2 Preamble pattern generation. The sync preamble pattern shall be a sequence of channel symbols containing three bits each (see 5.3.2.3.7.2.1). These channel symbols shall be mapped into thirty-two tribit numbers as given in table XVII.

NOTE: When the two known symbol patterns preceding the transmission of each new interleaver block are transmitted, the patterns in table XVII are repeated twice rather than four times to produce a pattern of 16 tribit numbers.

TABLE XVII. Channel symbol mapping for sync preamble.

Channel Symbol	Tribit Numbers
000	(0000 0000) repeated 4 times
001	(0404 0404) repeated 4 times
010	(0044 0044) repeated 4 times
011	(0440 0440) repeated 4 times
100	(0000 4444) repeated 4 times
101	(0404 4040) repeated 4 times
110	(0044 4400) repeated 4 times
111	(0440 4004) repeated 4 times

5.3.2.3.8 Scrambler. The tribit number supplied from the symbol formation function for each 8-ary transmitted symbol shall be modulo 8 added to a three-bit value supplied by either the data sequence randomizing generator or the sync sequence randomizing generator.

5.3.2.3.8.1 Data sequence randomizing generator. The data sequence randomizing generator shall be a 12-bit shift register with the functional configuration shown on figure 6. At the start of the data phase, the shift register shall be loaded with the initial pattern shown in figure 6 (101110101101 (binary) or BAD (hexadecimal)) and advanced eight times. The resulting three bits, as shown, shall be used to supply the scrambler with a number from 0 to 7. The shift register shall be shifted eight times each time a new three-bit number is required (every transmit symbol period). After 160 transmit symbols, the shift register shall be reset to BAD (hexadecimal) prior to the eight shifts.

NOTE: This sequence produces a periodic pattern 160 transmit symbols in length.

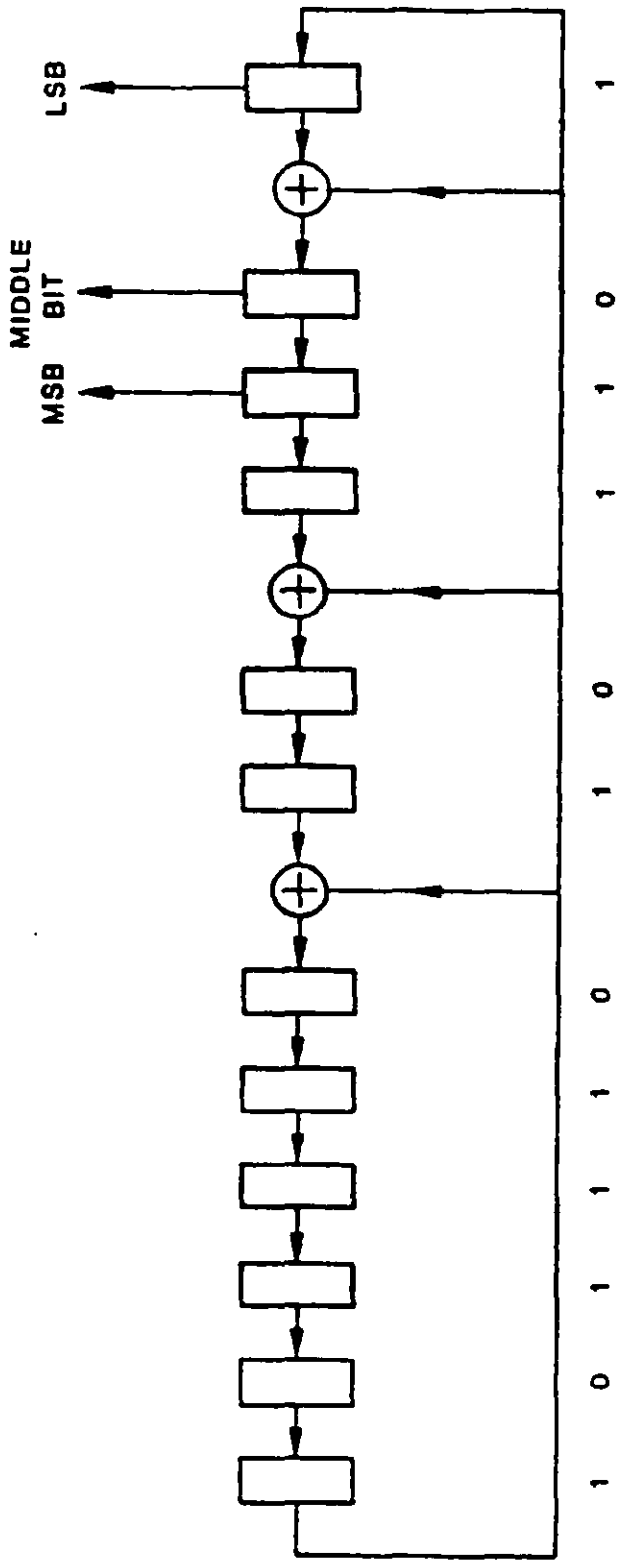

NOTES:

1. INITIAL SETTING SHOWN
2. SHIFTED 8 TIMES BETWEEN OUTPUTS

FIGURE 6. Randomizing shift register functional diagram.

5.3.2.3.8.2 Sync sequence randomizing generator. The following scrambling sequence for the sync preamble shall repeat every 32 transmitted symbols:

7 4 3 0 5 1 5 0 2 2 1 1 5 7 4 3 5 0 2 6 2 1 6 2 0 0 5 0 5 2 6 6

where 7 shall always be used first and 6 shall be used last. The sequences in 5.3.2.3.8.1 and this paragraph shall be modulo 8 added to the output of the symbol formation function.

5.3.2.3.9 PSK modulation.

a. The eight-phase modulation process shall be achieved by assigning the tribit numbers from the scrambler to 45-degree increments of an 1800-Hz sinewave. Thus, 0 (000) corresponds to 0 degrees, 1 (001) corresponds to 45 degrees, 2 (010) corresponds to 90 degrees, etc. Figure 5 shows the assignment and pattern of output waveform generation.

NOTE: Since the transmit channel symbol duration is less than one cycle of the 1800-Hz carrier, the waveforms controlling the sine and cosine components must be filtered to prevent severe aliasing.

b. Clock accuracy for generation of the 1800-Hz carrier shall be within ±1 Hz.

5.3.2.4 Waveform summary. For frequency-hopping and fixed-frequency operation, tables XVIII and XIX summarize the data phase characteristics of the transmitted formats that shall be used for each bit rate.

NOTE: 4800 bps is not applicable to the frequency-hopping operation.

TABLE XVIII. Frequency-hopping operation waveform characteristics

Information rate	Coding rate	Channel rate	Bits/channel symbol	8-Phase channel symbol	Hop format
2400	2/3	3600	3	1	*
1200	1/2	2400	2	1	*
600	1/2	1200	1	1	*
300	1/4	1200	1	1	*
150	1/8	1200	1	1	*
75	1/16	1200	1	1	*

*To be provided in a revision of MIL-STD-188-148 (Appendix D).

TABLE XIX. Fixed-frequency operation waveform characteristics.

Information rate	Coding rate	Channel rate	Bits/ channel symbol	8-Phase symbols/ channel symbol	No. of unknown 8-phase symbols	No. of known 8-phase symbols
4800	(no coding)	4800	3	1	32	16
2400	1/2	4800	3	1	32	16
1200	1/2	2400	2	1	20	20
600	1/2	1200	1	1	20	20
300	1/4	1200	1	1	20	20
150	1/8	1200	1	1	20	20
75	1/2	150	2	32	All	0

5.3.2.5 Performance requirements. The measured performance of the serial (single-tone) mode, using fixed-frequency operation and employing the maximum interleaving period, shall be equal to or better than the coded BER performance in table XX. Performance verification shall be tested using a baseband HF simulator patterned after the Watterson Model in accordance with International Radio Consultative Committee (CCIR) 549-2. The modeled multipath spread values and fading (two sigma) bandwidth (BW) values in table XX shall consist of two independent but equal average power Rayleigh paths. For frequency-hopping operation, an additional 2 dB in signal-to-noise ratio (SNR) shall be allowed.

5.4 Wireline data modems. Wireline data modems shall be capable of operation in private line (leased) point-to-point circuits and in the public switched network (PSN) dial-up circuits. General and specific requirements for these applications are provided below in 5.4.1 and 5.4.2, respectively.

5.4.1 General requirements.

5.4.1.1 Interface requirements. The modem shall be directly connectable to the PSN in conformance with Part 68 of the Federal Communications Commission (FCC) Rules and Regulations.

5.4.1.2 Output power level. The total power transmitted by the modem to the line shall be adjustable in no greater than 1-dB steps from at least -12 dBm to -3 dBm.

5.4.2 Performance requirements.

5.4.2.1 General. As a minimum, wireline data modems shall be evaluated using BER and user throughput as standardized measures. During 99 percent of the time that the network is in use, the user throughput shall be equal to or greater than 50 percent. BER requirements for private line (leased) service point-to-point circuits and PSN circuits are given below in 5.4.2.2 and 5.4.2.3, respectively.

TABLE XX. Serial (single-tone) mode minimum performance.

User bit	Channel paths	Multipath (ms)	Fading (Note 1) BW (Hz)	SNR (Note 2) (dB)	Coded BER
4800	1 Fixed	-	-	17	1.0 E-3
4800	2 Fading	2	0.5	27	1.0 E-3
2400	1 Fixed	-	-	10	1.0 E-5
2400	2 Fading	2	1	18	1.0 E-5
2400	2 Fading	2	5	30	1.0 E-3
2400	2 Fading	5	1	30	1.0 E-5
1200	2 Fading	2	1	11	1.0 E-5
600	2 Fading	2	1	7	1.0 E-5
300	2 Fading	5	5	7	1.0 E-5
150	2 Fading	5	5	5	1.0 E-5
75	2 Fading	5	5	2	1.0 E-5

NOTES: 1. Per CCIR 549-2.

2. Both signal and noise powers are measured in a 3-kHz bandwidth.

5.4.2.2 BER for private line (leased) service point-to-point circuits. The BER shall not exceed one bit error in 10^5 (DO: 10^6) bits 99 percent of the time when operating over a military C1 type circuit at 600 or 1200 bps, or over a military C2 type circuit at the higher bit rates. C1 and C2 type circuits are defined in DCAC-300-175-9.

5.4.2.3 BER and other parameters for PSN service dial-up circuits. The BER for PSN service dial-up circuits shall not exceed one bit error in 10^5 bits 95 percent of the time when operating over a military C3 type circuit. The C3 type circuit is defined in DCAC 300-175-9. Modem performance shall be evaluated in accordance with the channel impairment combinations specified in Telecommunications Industries Association (TIA) (formerly Electronic Industries Association (EIA)) Standard EIA-496-A, Section 5, Data Transmission Evaluation Criteria.

5.4.2.4 Automatic answering and calling sequence for PSN. PSN wireline modems shall perform the automatic answering and calling sequence in accordance with International Telegraph and Telephone Consultative Committee (CCITT) Recommendation V.25 (volume VIII, fascicle VIII.1).

5.5 Data modems for 600 bps or 1200 bps. Full duplex modems used for transmitting data with signaling rates of 600 bps or 1200 bps over nominal 4-kilohertz (kHz) VF channels terminated by 2-wire circuits shall comply with the applicable requirements of Federal Standard FIPS-PUB-136 as modified by 5.4 above. FIPS-PUB-136 is based on CCITT Recommendation V.22 (volume VIII, fascicle VIII.1).

5.6 Data modems for 2400 bps. The data modems used for transmitting data with signaling rates of 2400 bps over nominal 4-kHz VF channels shall comply with the applicable requirements of FIPS-PUB-133. FIPS-PUB-133 is based on CCITT Recommendation V.22 bis, V.26, and V.26 bis (volume VIII, fascicle VIII.1).

5.6.1 Optional mode. As a DO, the modem should be capable of expansion to include the following optional mode: a 2-wire DPSK full-duplex modem with optional fallback rate to 1200 bps in accordance with CCITT Recommendation V.26 ter (volume VIII, fascicle VIII.1).

5.6.2 Throughput. When operating over an Automatic Digital Network (AUDODIN) interswitch or access line, the modem shall provide for a block throughput of 95 percent per 1000 data line blocks transmitted. Each line block consists of 684 bits.

5.7 Data modems for 4800 bps. Nondiversity DPSK modems used for transmitting data with signaling rates of 4800 bps over nominal 4-kHz VF channels shall comply with the applicable requirements of FIPS-PUB-134-1 as modified by 5.4 above. FIPS-PUB-134-1 is based on techniques described in CCITT Recommendations V.27bis, V.27ter ad V.32.

5.7.1 Fallback operation. If 2400-bps fallback operation is required, it shall be in accordance with one of the two alternative modes of FIPS-PUB-134-1.

NOTE: This implements FIPS-PUB-133 and 5.6 above.

5.7.2 Optional modes. As a DO, the modem should be capable of expansion to include one or more of the following additional modes.

- 2-wire half-duplex and 4-wire full-duplex mode in accordance with CCITT Recommendation V.27 ter (volume VIII, fascicle VIII.1).
- 2-wire full-duplex mode in accordance with CCITT Recommendation V.32 (volume VIII, fascicle VIII.1).
- 2-wire half-duplex and 4-wire full-duplex mode in accordance with CCITT Recommendation V.29 (volume VIII, fascicle VIII.1).

5.8 Data modems for 9600 bps.

5.8.1 Private line operation. Quadrature amplitude modulation (QAM) 4-wire full-duplex modems, used for transmitting data with signaling rates of 9600 bps with optional fallback rates of 7200 bps and 4800 bps over nominal 4-kHz VF channels, shall comply with the applicable requirements of FIPS-PUB-135 as modified by 5.4 above. FIPS-PUB-135 is based on CCITT Recommendation V.29 (volume VIII, fascicle VIII.1).

5.8.2 Fallback operation. If 4800-bps fallback operation is required, it shall be in accordance with option II in FIPS-PUB-135.

NOTE: This implements FIPS-PUB-134-1 and 5.7 above.

5.8.3 Switched network operation (U.S. PSN, foreign push-to-talk (PTT) and Digital Switched Network (DSN)). The modem shall be capable of operation of 9600 bps in accordance with CCITT Recommendation V.32 (volume III, fascicle VIII.1) and provide a level of performance in accordance with section 5 of EIA-496A. (D.O. 14.4).

5.9 Data modems with data signaling rates greater than 9600 bps. Requirements for data modems with data signaling rates greater than 9600 bps are not standardized.

6. NOTES

(This section contains information of a general or explanatory nature that may be helpful, but is not mandatory.)

6.1 Intended use. This standard contains requirements to ensure interoperability and minimum performance of new long-haul and tactical data modulators-demodulators (modems). These modems are intended for use in dedicated point-to-point circuits, public switched network (PSN) circuits, and in single-purpose systems such as medium frequency (MF) and high frequency (HF) radio.

6.2 Issue of Department of Defense Index of Specifications and Standards (DODISS). When this standard is used in acquisition, the applicable issue of the DODISS must be cited in the solicitation (see 2.2.1 and 2.2).

6.3 Subject term (key word) listing.

Asynchronous

DPSK

Error-correcting code

Fallback Operation

Fixed-frequency

Frequency hopping

FSK

Full-duplex

Modified-gray decoder

Half-duplex

HF data modems

In-band signaling

Interleaving

Modulator/demodulator

PSK

QAM

Quasi-analog signals

Randomizing generator

Scrambler

Serial (single tone)

Synchronous

16-tone DPSK mode

39-tone parallel mode

APPENDIX A

16-TONE DIFFERENTIAL PHASE-SHIFT KEYING (DPSK) MODE

10. GENERAL.

10.1 Scope. This appendix describes the 16-tone differential phase-shift keying (DPSK) mode.

10.2 Applicability. This appendix is a nonmandatory part of MIL-STD-188-110A; however, when the optional 16-tone DPSK mode is used, it shall be implemented in accordance with this appendix.

20. APPLICABLE DOCUMENTS. This section is not applicable to this appendix.

30. DEFINITIONS. See section 3.

40. GENERAL REQUIREMENTS.

40.1 Introduction. The modulator accepts serial binary data signals at the input and converts this information into DPSK data tones transmitted at the modulator output. The input data signaling rate determines the type of modulation and the degree of in-band diversity that is used. The modulation rate of the modulator output signal is constant for all input signaling rates accepted by the modulator. The modulator-demodulator (modem) provides a means for synchronization and, if required, a separate tone for doppler correction. The demodulator accepts the DPSK data tones at the input and reconverts this information into serial binary data signals at the demodulator output.

40.2 Input/output data signaling rates. The modulator input shall accept, and the demodulator output shall deliver, a serial binary bit stream with standard data signaling rates ranging from 75 to 2400 bits per second (bps).

50. DETAILED REQUIREMENTS.

50.1 Modulator output signal. The modulator output signal shall contain 16 DPSK data tones (table A-I). The 16 data tones shall be simultaneously keyed to produce a signal element interval of 13-1/3 milliseconds (ms) for each data tone. The composite modulator output signal shall have a constant modulation rate of 75 baud for all input data signaling rates from 75 to 2400 bps. The modulator shall provide a separate tone combination to initiate synchronization and, if required, a separate tone for doppler correction.

50.2 Data-tone frequencies. The frequency of each data tone shall be as listed in table A-II. The tone frequencies shall maintain an accuracy of ± 0.1 hertz (Hz).

50.3 Phase modulation and encoding. For data signaling rates of 75, 150, 300, or 600 bps at the modulator input, each data tone signal element shall be two-phase (biphase) modulated (see figure A-1a). Each bit of the serial binary input signal shall be encoded, depending on the MARK or SPACE logic sense of the bit, into a phase change of the data-tone signal element as listed in table A-II. For data signaling rates of 1200 or 2400 bps at the modulator input, each data-tone signal element shall be four-phase (quadrature-phase) modulated (see figure A-1b). Each dibit of the serial binary input signal shall be encoded, depending on the MARK or SPACE logic sense and the even or odd

bit location of each bit, into a phase change of the data-tone signal element as listed in table A-II. The phase changes of the data-tone signal elements specified in table A-II shall be relative to the phase of the immediately preceding signal element.

50.4 Synchronization. Upon receipt of a transmit command, the modem shall initiate a synchronization preamble. The preamble shall consist of two tones with frequencies of 605 Hz and 1705 Hz, for a minimum duration of 66-2/3 ms, corresponding to a duration of five to 32 data-tone signal elements. The 605-Hz tone shall be unmodulated and used for doppler correction, if required. The 1705-Hz tone shall be phase shifted 180 degrees for each data-tone signal element and shall be used to obtain proper modem synchronization by the demodulator. During the preamble, the transmitted level of the 605-Hz tone shall be 7 decibels (dB), ±1 dB higher than the level of the 1705-Hz tone. The composite transmitted signal level of the 605-Hz and 1705-Hz tones during the preamble shall have a root-mean-square (rms) value within ±1 dB of the rms value of the modulator output signal level during data transmission when all 16 data tones plus doppler correction tone are transmitted. At the completion of the preamble, all data tones shall be transmitted for the duration of one signal element (13-1/3 ms) prior to the transmission of data to establish a phase reference. During data transmission, synchronization shall be maintained by sampling the signal energy in the 825-Hz synchronization slot. No tone shall be transmitted in the synchronization slot of 825 Hz.

50.5 Doppler correction. For those applications where a doppler correction capability is required, a tone with a frequency of 605 Hz shall be used. The level of the 605-Hz tone shall be 7 dB ±1 dB higher than the normal level of any one of the subcarriers.

50.6 In-band diversity combining. In-band diversity combining shall be accomplished at data signaling rates from 75 bps to 1200 bps. The data tones shall be combined in accordance with table A-I. The degree of diversity combining shall be as listed in table A-II.

50.7 Demodulator signal alarm. Provisions shall be made in the demodulator to activate an alarm when the incoming signal from the HF radio link decreases below a preset level.

NOTE: The specific techniques and levels to be used for the demodulator signal alarm are not standardized and should be defined in applicable modem specifications.

TABLE A-I. Data tone frequencies and bit locations for HF 16-tone DPSK data modem.

Tone frequency (Hz)	Function	Even and odd bit locations of serial binary bit stream, encoded and phase modulated on each data tone employing: Quadrature-phase modulation 2400 bps	1200 bps	600 bps	Biphase modulation 300 bps	150 bps	75 bps
605	Continuous doppler tone				In-band diversity (See 50.6)		
825*	Synchronization slot						
935	Data tone 1	1st and 2nd	1st and 2nd	1st	1st	1st	1st
1045	Data tone 2	3rd and 4th	3rd and 4th	2nd	2nd	2nd	1st
1155	Data tone 3	5th and 6th	5th and 6th	3rd	3rd	1st	1st
1265	Data tone 4	7th and 8th	7th and 8th	4th	4th	2nd	1st
1375	Data tone 5	9th and 10th	9th and 10th	5th	1st	1st	1st
1485	Data tone 6	11th and 12th	11th and 12th	6th	2nd	2nd	1st
1595	Data tone 7	13th and 14th	13th and 14th	7th	3rd	1st	1st
1705	Data tone 8	15th and 16th	15th and 16th	8th	4th	2nd	1st
1815	Data tone 9	17th and 18th	1st and 2nd	1st	1st	1st	1st
1925	Data tone 10	19th and 20th	3rd and 4th	2nd	2nd	2nd	1st
2035	Data tone 11	21st and 22nd	5th and 6th	3rd	3rd	1st	1st
2145	Data tone 12	23rd and 24th	7th and 8th	4th	4th	2nd	1st
2255	Data tone 13	25th and 26th	9th and 10th	5th	1st	1st	1st
2365	Data tone 14	27th and 28th	11th and 12th	6th	2nd	2nd	1st
2475	Data tone 15	29th and 30th	13th and 14th	7th	3rd	1st	1st
2585	Data tone 16	31st and 32nd	15th and 16th	8th	4th	2nd	1st

*No tone is transmitted at this frequency. (See 50.4)

TABLE A-II. Modulation characteristics for HF 16-tone DPSK data modem.

Input data signaling rate (bps)	Degree of in-band diversity combining	Type of modulation	Logic sense of dibits or bits in serial binary bit stream depending on: Even bit locations	Odd bit locations	Phase (in degrees) of data tone signal element relative to phase of preceding signal element
2400	N/A	Four-phase	MARK	SPACE	+45
			SPACE	SPACE	+135
			SPACE	MARK	+225
1200	2		MARK	MARK	+315
600	2	Two-phase	MARK*		+315
300	4				
150	8				
75	16		SPACE*		+135

*Regardless of even or odd bit locations.

APPENDIX A

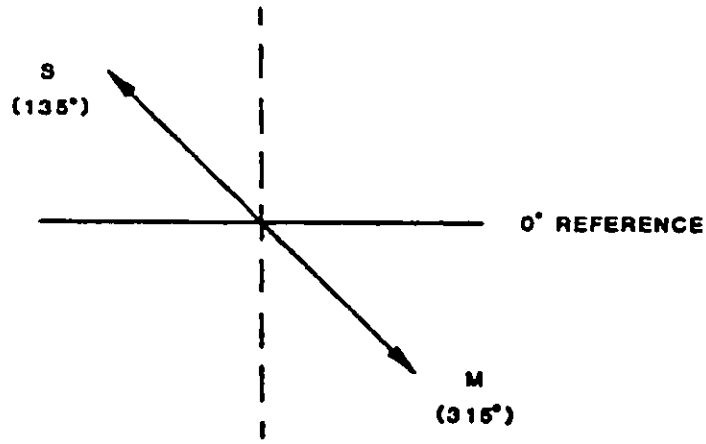

a. For data signaling rates of 75, 150, 300, or 600 bps.

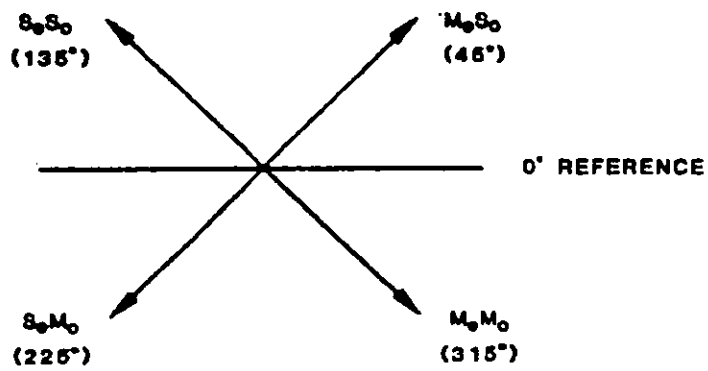

b. For data signaling rates of 1200 or 2400 bps.

NOTES: 1. M = Logic sense of MARK; S = Logic sense of SPACE.

2. The subscripts refer to the even (e) or odd (o) bit locations of the serial binary bit stream (see table A-II).

FIGURE A-1. Phase modulation vectors for HF 16-tone DPSK data modem.

APPENDIX B

39-TONE PARALLEL MODE

10. GENERAL.

10.1 Scope. This appendix describes the 39-tone parallel mode.

10.2 Applicability. This appendix is a nonmandatory part of MIL-STD-188-110A; however, when the optional 39-tone parallel mode is used, it shall be implemented in accordance with this appendix.

20. APPLICABLE DOCUMENTS. This section is not applicable to this appendix.

30. DEFINITIONS. See section 3.

40. GENERAL REQUIREMENTS. The mode specified herein uses 39 orthogonal subcarrier tones in the audio frequency band with quadrature differential phase-shift keying (QDPSK) modulation for bit-synchronous data transmission. In the transmit direction, this mode (see figure B-1) (1) accepts UNKNOWN serial binary data at its line-side data input port, (2) performs forward error correction (FEC) encoding and interleaving, and (3) converts the resulting bit stream into QDPSK data tones at the modulator output port. The modulation rate of the modulator output is constant for all data rates. In-band diversity of varying degrees is used at data rates below 1200 bits per second (bps). A means is provided for synchronization of the signal element and interleaved data block timing. A 40th unmodulated tone is used for correcting frequency offsets introduced by doppler shift or radio equipment instability. In a like manner, the receive direction (1) accepts QDPSK data tones at its input, (2) converts them into the transmitted serial bit stream, (3) performs deinterleaving and FEC decoding, and (4) makes the resulting data stream available at its line-side output port.

50. DETAILED REQUIREMENTS

50.1 Characteristics. In this section, detailed requirements are given for the waveform characteristics for which knowledge is needed to achieve over-the-air interoperability. These characteristics are error-correction coding, interleaving, synchronization, modulator output signal, in-band time/frequency diversity, and asynchronous data operation.

50.2 Error-correcting coding. All UNKNOWN input data shall have redundant bits added to it, prior to modulation, for the purpose of correcting errors introduced by the transmission medium. The added bits shall be computed by a shortened Reed-Solomon (15,11) block code, whose generator polynomial is:

$$g(x) = x^4 + a^{13} x^3 + a^6 x^2 + a^3 x + a^{10};$$

where a is a nonzero element of the Galois field $(GF)(2^4)$ formed as the field of polynomials over GF(2) modulo $x^4 + x + 1$.

For input signaling rates of 2400 bps, the code shall be shortened to (14,10). Otherwise, the code shall be shortened to (7,3).

APPENDIX B

50.3 Interleaving. The mode shall perform block interleaving for the purpose of providing time separation between contiguous symbols of a code word. Selectable interleaving degrees for the data rates as shown in table B-I shall be provided. For a data signaling rate of 2400 bps, the selection shall consist of eight degrees. At data signaling rates below 2400 bps, four degrees for each bit rate shall be provided as shown in table B-I. The input data stream shall be loaded into the interleaver buffer as described by figures B-2 and B-3.

50.4 Synchronization. A means shall be provided whereby the receive demodulator process achieves time alignment with both signal element and code-word timing. Frame synchronization shall be acquired within 680 milliseconds (ms). The transmit sequence of events is shown on figure B-4.

50.4.1 Preamble. Prior to the transmission of data, a three-part preamble shall be transmitted. Part one shall last for 14 signal-element periods and consist of four equal-amplitude unmodulated data tones of 787.5, 1462.5, 2137.5, and 2812.5 hertz (Hz). Part two shall last for 8 signal-element periods and consist of three modulated data tones of 1125.0, 1800.0, and 2475.0 Hz. The three data tones of part two shall be advanced 180 degrees at the boundary of each data signal-element. Part three shall last for one signal-element period and consist of all 39 data tones plus the doppler correction tone. This last part establishes the starting phase reference for subsequent signal-element periods. During all parts of the preamble, the transmitted level of the composite signals shall have a root-mean-square (rms) value within ± 1 decibel (dB) of the rms value of the modulator output (39-tone) levels occurring during subsequent data transmission. The tone phases at the onset of each part of the preamble, along with their normalized amplitudes, shall be in accordance with table B-II.

50.4.2 Extended preamble. To improve the probability of synchronization and signal presence detection in low signal-to-noise ratio situations, the ability to select an extended preamble shall be provided. Part one of the extended preamble shall last for 58 signal-element periods, part two shall last for 27 signal-element periods, and part three shall last for 12 signal-element periods. In parts one and two, the data tones shall be as described in the nonextended preamble given above. In part three, the phase of each data tone shall be set at the onset of each signal-element to the phase that it had at the onset of the first signal-element in this part.

NOTE: When operating with the extended preamble, the minimum doppler correction shall be ± 20 Hz and frame synchronization shall be acquired within 2.5 seconds (s).

50.4.3 Data block synchronization. A set of interleaved code words is known as a super block. Block synchronization (framing) is the process whereby a receiving demodulator locates super block boundaries. This synchronization process must occur before proper deinterleaving and decoding can commence. Framing shall be established and maintained by periodically inserting into the encoded unknown data bit stream a known pseudorandom sequence. The required sequence is defined by the primitive polynomial $f(x) = x^9 + x^7 + x^6 + x^4 + 1$, when used in the feedback shift register configuration shown in figure B-5.

The first insertion of the block framing sequence shall start on the first signal element following the synchronization preamble. Upon transmission of the last bit of the sequence, the first bit of the first super block shall be transmitted without interruption. Thereafter, the framing sequence shall be inserted each time the number of super blocks specified in table B-III has been transmitted. Upon transmission of the last bit of the framing sequence, transmission of data bits shall resume without interruption.

APPENDIX B

The number of framing bits to be transmitted per insertion varies with data rate and interleaving degree, and is specified in table B-III. However, the final bit of the framing sequence shall always be the first space bit which follows a contiguous block of nine MARK bits. Equivalently, the final sequence bit shall be the bit generated by the shift register when its present state is 111111111 (binary) or 511 (decimal).

50.5 Modulator output signal. The modulator output shall contain 39 QDPSK data tones (see table B-IV). The 39 data tones shall be simultaneously keyed to produce a signal-element interval of 22.5 milliseconds (ms) for each data tone. The composite modulator output shall have a constant modulation rate of 44.44 baud (Bd) for all standard input data signaling rates from 75 to 2400 bps. At input signaling rates less than 2400 bps, information carried on data tones 1 through 7 shall also be carried on data tones 33 through 39. The modulator shall also provide the required special preamble tone combinations used to initiate synchronization and doppler correction.

During data transmission, the unmodulated doppler correction tone shall be 6 dB $\pm$1 dB higher than the normal level of any data tone. All tone frequencies shall maintain an accuracy of $\pm$0.05 Hz. At the onset of each signal element, every data tone shall experience a phase change relative to its phase at the onset of the previous signal element. The modulator shall partition the bit stream to be transmitted into 2-bit symbols (dibits) and map them into a phase change of the appropriate data tone according to table B-V.

50.6 In-band diversity. Two selectable methods of in-band diversity for data rates of 75-600 bps shall be incorporated in each modem as follows: a modern method containing both time and frequency diversity, and a frequency-only diversity method for backward compatibility with older modems. The requirements given for these methods in the following subparagraphs apply to diversities of order d, where d = 1200/(data signaling rate).

50.6.1 Time/frequency diversity. Disregarding the redundant data carried on data tones 33 through 39, 64 bits, equally partitioned into d data words, shall be transmitted during each 22.5-ms signal element. Each data word and its d-1 copies shall be transmitted on 32/d unique data tones in d different signal elements. If data word i is being transmitted in a given signal element, the other data words that are to be transmitted in the same signal element are given by i - k(16/d), where k ranges from 1 through d-1 (see table B-VI).

50.6.2 Frequency diversity. In-band diversity shall be characterized by transmitting a data word and its (d-1) copies in one signal element (e.g., 22.5-ms time interval). This characterization is according to the tone/bit assignments shown in table B-VII.

50.7 Asynchronous data operation. In addition to bit-synchronous data transmission, an asynchronous mode shall also be supported. When operating in the asynchronous mode, the modulator shall accept source data in asynchronous start/stop character format, and convert it to bit synchronous data prior to FEC encoding. Conversely, after FEC decoding, the demodulator shall convert bit synchronous data back into asynchronous format. Also, before FEC encoding, the start, stop, and parity bits shall be replaced by SPACE bits. After FEC decoding, the start, stop, and parity bits shall be re-generated before placing the characters in the output data stream.

Otherwise, the mode operates as specified in 50.1 through 50.6 above.

50.7.1 Character length. A means shall be provided whereby the modulator will accept, and the demodulator will generate, any of the data characters shown in table B-VIII.

50.7.2 Data signaling rate constraint. A means shall be provided whereby the selected data signaling rate of the modem is constrained to not exceed the nominal bit rate of the data input source.

50.7.3 Data-rate adjustment. A means shall be provided whereby differences between data signaling rates of the data input source and the modem are accommodated with no loss of data or introduction of extraneous data in the demodulated output.

50.7.3.1 Input data source rate greater than modem rate. The modem shall maintain a control path to the data source for the purpose of stopping the flow of data into the modulator. When the modem senses that continued flow of input data will result in data loss, it shall cause the data source to suspend the transfer of data. Upon sensing that the threat of data loss has passed, the modem shall allow the transfer of data to resume.

50.7.3.2 Input data source rate less than modem rate. When the modem senses that it is about to exhaust its supply of source data, it shall insert a special "null" character into the source data bit stream prior to encoding. The null character shall be formed by making each of its bits a SPACE, and the start, stop, and parity bits a MARK. The demodulator shall recognize this bit pattern as a null character, and discard it from its data output.

50.7.4 End-of-message (EOM) indication. Upon reception of the source's final data character, the modulator shall insert a series of EOM characters into the source data bit stream prior to encoding. The EOM character shall be formed by making each of its bits a MARK. The number of EOM characters inserted shall range from a minimum of ten to the number greater than ten required to fill a super block. The demodulator shall use the arrival of the EOM characters to terminate its data output.

50.7.5 Asynchronous mode interleaving and block framing. The degree of interleaving, and the framing sequence length used in the asynchronous mode, vary with data signaling rate and character length. With each data rate and character length, four selectable interleaving degrees shall be provided as shown in tables B-IX, B-X, and B-XI, along with the corresponding framing sequence length.

50.7.6 Bit packing. An integral number of data characters shall be transmitted between framing sequence transmissions. Therefore, the number of bits encoded will not always equal the number of bits received from the data source. In such cases, the modulator shall insert into the source data a number of fill bits equal to the difference between the number of bits encoded and the number of bits received (see tables B-IX, B-X, and B-XI). The fill bits shall be located in the bit stream so that they are the first bits encoded, thereby permitting the remainder of the data transmission to carry an integral number of data characters.

60. PERFORMANCE REQUIREMENTS. The minimum performance of the 39-tone mode employing soft-decision decoding and maximum interleaving, as measured using a baseband HF simulator patterned after the Watterson Model for channel simulation shall be as shown in table B-XII.

APPENDIX B

TABLE B-I. Selectable interleaving degrees.

Data rate (bps)	75	150	300	600	1200	2400	
Interleaving degree	1	1	1	1	1	1	36
	4	9	17	33	63	9	72
	12	25	47	99	189	18	144
	36	81	153	297	567	27	288

TABLE B-II. Normalized tone amplitudes and initial phases.

Preamble part number	Tone freq (Hz)	Function	Normalized amplitude	Initial phase (degrees)
1	787.50	Data tone 3	3	0.0
1	1462.50	Data tone 15	3	103.7
1	2137.50	Data tone 27	3	103.7
1	2812.50	Data tone 39	3	0.0
2	1125.00	Data tone 9	4	0.0
2	1800.00	Data tone 21	4	90.0
2	2475.00	Data tone 33	4	0.0
3	393.75	Doppler	2	0.0
3	675.00	Data tone 1	1	0.0
3	731.25	Data tone 2	1	5.6
3	787.50	Data tone 3	1	19.7
3	843.75	Data tone 4	1	42.2
3	900.00	Data tone 5	1	73.1
3	956.25	Data tone 6	1	115.3
3	1012.50	Data tone 7	1	165.9
3	1068.75	Data tone 8	1	225.0
3	1125.00	Data tone 9	1	295.3
3	1181.25	Data tone 10	1	14.1
3	1237.50	Data tone 11	1	101.3
3	1293.75	Data tone 12	1	199.7
3	1350.00	Data tone 13	1	303.8
3	1406.25	Data tone 14	1	59.1
3	1462.50	Data tone 15	1	185.6

APPENDIX B

TABLE B-II. Normalized tone amplitudes and initial phases - Continued

Preamble part number	Tone freq (Hz)	Function	Normalized amplitude	Initial phase (degrees)
3	1518.75	Data tone 16	1	317.8
3	1575.00	Data tone 17	1	101.3
3	1631.25	Data tone 18	1	253.1
3	1687.50	Data tone 19	1	56.3
3	1743.75	Data tone 20	1	225.0
3	1800.00	Data tone 21	1	45.0
3	1856.25	Data tone 22	1	236.3
3	1912.50	Data tone 23	1	73.1
3	1968.75	Data tone 24	1	281.3
3	2025.00	Data tone 25	1	137.8
3	2081.25	Data tone 26	1	5.6
3	2137.50	Data tone 27	1	239.1
3	2193.75	Data tone 28	1	123.8
3	2250.00	Data tone 29	1	19.7
3	2306.25	Data tone 30	1	281.3
3	2362.50	Data tone 31	1	194.1
3	2418.75	Data tone 32	1	115.3
3	2475.00	Data tone 33	1	45.0
3	2531.25	Data tone 34	1	345.9
3	2587.50	Data tone 35	1	295.3
3	2643.75	Data tone 36	1	253.1
3	2700.00	Data tone 37	1	222.2
3	2756.25	Data tone 38	1	199.7
3	2812.50	Data tone 39	1	185.6

APPENDIX B

TABLE B-III. Framing sequence insertion intervals and lengths.

Data rate (bps)	Interleaving degree	Insertion interval (super blocks)	Insertion interval (bits)	Sequence length (bits)
75	1	567	15876	252
75	4	234	26208	416
75	12	75	25200	400
75	36	16	16128	256
150	1	576	16128	256
150	9	100	25200	400
150	25	36	25200	400
150	81	8	18144	288
300	1	567	15876	252
300	17	54	25704	408
300	47	18	23688	376
300	153	4	17136	272
600	1	567	15876	252
600	33	30	27720	440
600	99	10	27720	440
600	297	2	16632	264
1200	1	567	15876	252
1200	63	14	24696	392
1200	189	6	31752	504
1200	567	1	15876	252
2400	1	144	8064	256
2400	9	16	8064	256
2400	18	12	12096	384
2400	27	9	13608	432
2400	36	7	14112	448
2400	72	3	12096	384
2400	144	1	8064	256
2400	288	1	16128	512

NOTE: Insertion interval does not include framing sequence bits.

APPENDIX B

TABLE B-IV. Data-tone frequencies and bit locations.

Tone freq (Hz)	Function	Bit locations 2400 bps		1200 bps	
393.75	Continuous doppler				
675.00	Data tone 1	1	2	1	2
731.25	Data tone 2	3	4	3	4
787.50	Data tone 3	5	6	5	6
843.75	Data tone 4	7	8	7	8
900.00	Data tone 5	9	10	9	10
956.25	Data tone 6	11	12	11	12
1012.50	Data tone 7	13	14	13	14
1068.75	Data tone 8	15	16	15	16
1125.00	Data tone 9	17	18	17	18
1181.25	Data tone 10	19	20	19	20
1237.50	Data tone 11	21	22	21	22
1293.75	Data tone 12	23	24	23	24
1350.00	Data tone 13	25	26	25	26
1406.25	Data tone 14	27	28	27	28
1462.50	Data tone 15	29	30	29	30
1518.75	Data tone 16	31	32	31	32
1575.00	Data tone 17	33	34	33	34
1631.25	Data tone 18	35	36	35	36
1687.50	Data tone 19	37	38	37	38
1743.75	Data tone 20	39	40	39	40
1800.00	Data tone 21	41	42	41	42
1856.25	Data tone 22	43	44	43	44
1912.50	Data tone 23	45	46	45	46
1968.75	Data tone 24	47	48	47	48
2025.00	Data tone 25	49	50	49	50
2081.25	Data tone 26	51	52	51	52
2137.50	Data tone 27	53	54	53	54
2193.75	Data tone 28	55	56	55	56
2250.00	Data tone 29	57	58	57	58
2306.25	Data tone 30	59	60	59	60
2362.50	Data tone 31	61	62	61	62
2418.75	Data tone 32	63	64	63	64
2475.00	Data tone 33	65	66	1	2
2531.25	Data tone 34	67	68	3	4
2587.50	Data tone 35	69	70	5	6
2643.75	Data tone 36	71	72	7	8
2700.00	Data tone 37	73	74	9	10
2756.25	Data tone 38	75	76	11	12
2812.50	Data tone 39	77	78	13	14

APPENDIX B

TABLE B-V. Modulation characteristics of the 39-tone HF modem.

Logic sense of dibits		Phase change (degrees)
Later bit	Earlier bit	
MARK (1)	SPACE (0)	+45
SPACE (0)	SPACE (0)	+135
SPACE (0)	MARK (1)	+225
MARK (1)	MARK (1)	+315

APPENDIX B

TABLE B-VI. In-band time/frequency diversity.

Tone number	600 bps		Data word	300 bps		Data word	150 bps		Data word	75 bps		Data word
1	1	2		1	2		1	2		1	2	i
2	3	4		3	4		3	4	i	3	4	
3	5	6		5	6		5	6		1	2	i-1
4	7	8		7	8	i	7	8		3	4	
5	9	10		9	10		1	2		1	2	i-2
6	11	12		11	12		3	4	i-2	3	4	
7	13	14		13	14		5	6		1	2	i-3
8	15	16	i	15	16		7	8		3	4	
9	17	18		1	2		1	2		1	2	i-4
10	19	20		3	4		3	4	i-4	3	4	
11	21	22		5	6		5	6		1	2	i-5
12	23	24		7	8	i-4	7	8		3	4	
13	25	26		9	10		1	2		1	2	i-6
14	27	28		11	12		3	4	i-6	3	4	
15	29	30		13	14		5	6		1	2	i-7
16	31	32		15	16		7	8		3	4	
17	1	2		1	2		1	2		1	2	i-8
18	3	4		3	4		3	4	i-8	3	4	
19	5	6		5	6		5	6		1	2	i-9
20	7	8		7	8	i-8	7	8		3	4	
21	9	10		9	10		1	2		1	2	i-10
22	11	12		11	12		3	4	i-10	3	4	
23	13	14		13	14		5	6		1	2	i-11
24	15	16	i-8	15	16		7	8		3	4	
25	17	18		1	2		1	2		1	2	i-12
26	19	20		3	4		3	4	i-12	3	4	
27	21	22		5	6		5	6		1	2	i-13
28	23	24		7	8	i-12	7	8		3	4	
29	25	26		9	10		1	2		1	2	i-14
30	27	28		11	12		3	4	i-14	3	4	
31	29	30		13	14		5	6		1	2	i-15
32	31	32		15	16		7	8		3	4	
33	1	2		1	2		1	2		1	2	i
34	3	4		3	4		3	4	i	3	4	
35	5	6		5	6		5	6		1	2	i-1
36	7	8	i	7	8	i	7	8		3	4	
37	9	10		9	10		1	2		1	2	i-2
38	11	12		11	12		3	4	i-2	3	4	
39	13	14		13	14		5	6		1	2	i-3

APPENDIX B

TABLE B-VII. In-band frequency diversity

Tone freq (Hz)	Function	600 bps		300 bps		150 bps		75 bps	
393.75	Continuous doppler								
675.00	Data tone 1	1	2	1	2	1	2	1	2
731.25	Data tone 2	3	4	3	4	3	4	3	4
787.50	Data tone 3	5	6	5	6	5	6	1	2
843.75	Data tone 4	7	8	7	8	7	8	3	4
900.00	Data tone 5	9	10	9	10	1	2	1	2
956.25	Data tone 6	11	12	11	12	3	4	3	4
1012.50	Data tone 7	13	14	13	14	5	6	1	2
1068.75	Data tone 8	15	16	15	16	7	8	3	4
1125.00	Data tone 9	17	18	1	2	1	2	1	2
1181.25	Data tone 10	19	20	3	4	3	4	3	4
1237.50	Data tone 11	21	22	5	6	5	6	1	2
1293.75	Data tone 12	23	24	7	8	7	8	3	4
1350.00	Data tone 13	25	26	9	10	1	2	1	2
1406.25	Data tone 14	27	28	11	12	3	4	3	4
1462.50	Data tone 15	29	30	13	14	5	6	1	2
1518.75	Data tone 16	31	32	15	16	7	8	3	4
1575.00	Data tone 17	1	2	1	2	1	2	1	2
1631.25	Data tone 18	3	4	3	4	3	4	3	4
1687.50	Data tone 19	5	6	5	6	5	6	1	2
1743.75	Data tone 20	7	8	7	8	7	8	3	4
1800.00	Data tone 21	9	10	9	10	1	2	1	2
1856.25	Data tone 22	11	12	11	12	3	4	3	4
1912.50	Data tone 23	13	14	13	14	5	6	1	2
1968.75	Data tone 24	15	16	15	16	7	8	3	4
2025.00	Data tone 25	17	18	1	2	1	2	1	2
2081.25	Data tone 26	19	20	3	4	3	4	3	4
2137.50	Data tone 27	21	22	5	6	5	6	1	2
2193.75	Data tone 28	23	24	7	8	7	8	3	4
2250.00	Data tone 29	25	26	9	10	1	2	1	2
2306.25	Data tone 30	27	28	11	12	3	4	3	4
2362.50	Data tone 31	29	30	13	14	5	6	1	2
2418.75	Data tone 32	31	32	15	16	7	8	3	4
2475.00	Data tone 33	1	2	1	2	1	2	1	2
2531.25	Data tone 34	3	4	3	4	3	8	3	4
2587.50	Data tone 35	5	6	5	6	5	6	1	2
2643.75	Data tone 36	7	8	7	8	7	8	3	4
2700.00	Data tone 37	9	10	9	10	1	2	1	2
2756.25	Data tone 38	11	12	11	12	3	4	3	4
2812.50	Data tone 39	13	14	13	14	5	6	1	2

APPENDIX B

TABLE B-VIII. Asynchronous character set.

Number of bits	Character bit designation and location											
	1	2	3	4	5	6	7	8	9	10	11	12
7	St	Da	Da	Da	Da	Da	Sp					
8	St	Da	Da	Da	Da	Da	P+	Sp				
8	St	Da	Da	Da	Da	Da	P-	Sp				
8	St	Da	Da	Da	Da	Da	Sp	Sp				
8	St	Da	Da	Da	Da	Da	Da	Sp				
9	St	Da	Da	Da	Da	Da	P+	Sp	Sp			
9	St	Da	Da	Da	Da	Da	P-	Sp	Sp			
9	St	Da	Da	Da	Da	Da	Da	P+	Sp			
9	St	Da	Da	Da	Da	Da	Da	P-	Sp			
9	St	Da	Da	Da	Da	Da	Da	Sp	Sp			
9	St	Da	Da	Da	Da	Da	Da	Da	Sp			
10	St	Da	Da	Da	Da	Da	Da	P+	Sp	Sp		
10	St	Da	Da	Da	Da	Da	Da	P-	Sp	Sp		
10	St	Da	Da	Da	Da	Da	Da	Da	P+	Sp		
10	St	Da	Da	Da	Da	Da	Da	Da	P-	Sp		
10	St	Da	Da	Da	Da	Da	Da	Da	Sp	Sp		
10	St	Da	Da	Da	Da	Da	Da	Da	Da	Sp		
11	St	Da	Da	Da	Da	Da	Da	Da	P+	Sp	Sp	
11	St	Da	Da	Da	Da	Da	Da	Da	P-	Sp	Sp	
11	St	Da	Da	Da	Da	Da	Da	Da	Da	P+	Sp	
11	St	Da	Da	Da	Da	Da	Da	Da	Da	P-	Sp	
11	St	Da	Da	Da	Da	Da	Da	Da	Da	Sp	Sp	
12	St	Da	Da	Da	Da	Da	Da	Da	Da	P+	Sp	Sp
12	St	Da	Da	Da	Da	Da	Da	Da	Da	P-	Sp	Sp

Bit labeling key: Da = Data St = Start P+ = Positive parity
Sp = Stop P- = Negative parity

APPENDIX B

TABLE B-IX. 75-bps and 150-bps asynchronous operational parameters.

Data rate (bps)	Char length (bits)	Intlv degree	super blocks	Number of bits encoded	Number of source bits	fill bits	Seq number length (bits)
75	7	1	567	6804	6804	0	252
75	7	5	189	11340	11340	0	420
75	7	12	84	12096	12096	0	448
75	7	35	18	7560	7560	0	280
75	8	1	576	6912	6912	0	256
75	8	4	234	11232	11232	0	416
75	8	12	75	10800	10800	0	400
75	8	36	16	6912	6912	0	256
75	9	1	567	6804	6804	0	252
75	9	4	252	12096	12096	0	448
75	9	12	84	12096	12096	0	448
75	9	36	16	6912	6912	0	256
75	10	1	585	7020	7020	0	260
75	10	4	242	11616	11610	6	416
75	10	12	75	10800	10800	0	400
75	10	35	18	7560	7560	0	280
75	11	1	594	7128	7128	0	264
75	11	4	260	12480	12474	6	448
75	11	11	99	13068	13068	0	484
75	11	33	18	7128	7128	0	264
75	12	1	567	6804	6804	0	252
75	12	4	261	12528	12528	0	464
75	12	12	84	12096	12096	0	448
75	12	36	16	6912	6912	0	256
150	7	1	567	6804	6804	0	252
150	7	9	112	12096	12096	0	448
150	7	27	35	11340	11340	0	420
150	7	81	7	6804	6804	0	252
150	8	1	576	6912	6912	0	256
150	8	9	100	10800	10800	0	400
150	8	25	36	10800	10800	0	400
150	8	81	8	7776	7776	0	288

APPENDIX B

TABLE B-IX. 75-bps and 150-bps asynchronous operational parameters - Continued

Data rate (bps)	Char length (bits)	Intlv degree	super blocks	Number of bits encoded	Number of source bits	fill bits	Seq number length (bits)
150	9	1	567	6804	6804	0	252
150	9	9	112	12096	12096	0	448
150	9	25	38	11400	11394	6	408
150	9	81	7	6804	6804	0	252
150	10	1	585	7020	7020	0	260
150	10	9	110	11880	11880	0	440
150	10	25	36	10800	10800	0	400
150	10	75	9	8100	8100	0	300
150	11	1	594	7128	7128	0	264
150	11	9	110	11880	11880	0	440
150	11	27	33	10692	10692	0	396
150	11	77	9	8316	8316	0	308
150	12	1	567	6804	6804	0	252
150	12	9	110	11880	11880	0	440
150	12	27	33	10692	10692	0	396
150	12	81	7	6804	6804	0	252

APPENDIX B

TABLE B-X. 300-bps and 600-bps asynchronous operational parameters.

Data rate (bps)	Char length (bits)	Intlv degree	super blocks	Number of bits encoded	Number of source bits	fill bits	Seq number length (bits)
300	7	1	567	6804	6804	0	252
300	7	15	63	11340	11340	0	420
300	7	49	18	10584	10584	0	392
300	7	145	5	8700	8694	6	308
300	8	1	576	6912	6912	0	256
300	8	17	54	11016	11016	0	408
300	8	47	18	10152	10152	0	376
300	8	153	4	7344	7344	0	272
300	9	1	567	6804	6804	0	252
300	9	17	54	11016	11016	0	408
300	9	47	18	10152	10152	0	376
300	9	153	4	7344	7344	0	272
300	10	1	585	7020	7020	0	260
300	10	17	49	9996	9990	6	356
300	10	45	22	11880	11880	0	440
300	10	153	5	9180	9180	0	340
300	11	1	594	7128	7128	0	264
300	11	19	43	9804	9801	3	356
300	11	45	22	11880	11880	0	440
300	11	161	4	7728	7722	6	272
300	12	1	567	6804	6804	0	252
300	12	17	54	11016	11016	0	408
300	12	49	18	10584	10584	0	392
300	12	153	4	7344	7344	0	272
600	7	1	567	6804	6804	0	252
600	7	35	27	11340	11340	0	420
600	7	105	9	11340	11340	0	420
600	7	315	2	7560	7560	0	280
600	8	1	576	6912	6912	0	256
600	8	33	30	11880	11880	0	440
600	8	99	10	11880	11880	0	440
600	8	297	2	7128	7128	0	264

APPENDIX B

TABLE B-X. 300-bps and 600-bps asynchronous operational parameters - Continued

Data rate (bps)	Char length (bits)	Intlv degree	super blocks	Number of bits encoded	Number of source bits	fill bits	Seq number length (bits)
600	9	1	567	6804	6804	0	252
600	9	33	30	11880	11880	0	440
600	9	99	10	11880	11880	0	440
600	9	297	2	7128	7128	0	264
600	10	1	585	7020	7020	0	260
600	10	33	30	11880	11880	0	440
600	10	99	10	11880	11880	0	440
600	10	315	2	7560	7560	0	280
600	11	1	594	7128	7128	0	264
600	11	33	30	11880	11880	0	440
600	11	99	10	11880	11880	0	440
600	11	297	2	7128	7128	0	264
600	12	1	567	6804	6804	0	252
600	12	33	30	11880	11880	0	440
600	12	99	10	11880	11880	0	440
600	12	297	2	7128	7128	0	264

APPENDIX B

TABLE XI. 1200-bps and 2400-bps asynchronous operational parameters.

Data rate (bps)	Char length (bits)	Intlv degree	super blocks	Number of bits encoded	Number of source bits	fill bits	Seq number length (bits)
1200	7	1	567	6804	6804	0	252
1200	7	63	15	11340	11340	0	420
1200	7	189	6	13608	13608	0	504
1200	7	567	1	6804	6804	0	252
1200	8	1	576	6912	6912	0	256
1200	8	63	14	10584	10584	0	392
1200	8	189	6	13608	13608	0	504
1200	8	576	1	6912	6912	0	256
1200	9	1	567	6804	6804	0	252
1200	9	63	15	11340	11340	0	420
1200	9	189	6	13608	13608	0	504
1200	9	567	1	6804	6804	0	252
1200	10	1	585	7020	7020	0	260
1200	10	63	15	11340	11340	0	420
1200	10	195	6	14040	14040	0	520
1200	10	585	1	7020	7020	0	260
1200	11	1	594	7128	7128	0	264
1200	11	65	16	12480	12474	6	448
1200	11	203	5	12180	12177	3	444
1200	11	619	1	7428	7425	3	268
1200	12	1	567	6804	6804	0	252
1200	12	63	15	11340	11340	0	420
1200	12	189	6	13608	13608	0	504
1200	12	567	1	6804	6804	0	252
2400	7	1	145	5800	5796	4	252
2400	7	36	7	10080	10080	0	448
2400	7	73	3	8760	8757	3	385
2400	7	282	1	11280	11277	3	497
2400	8	1	144	5760	5760	0	256
2400	8	36	7	10080	10080	0	448
2400	8	72	3	8640	8640	0	384
2400	8	288	1	11520	11520	0	512

APPENDIX B

TABLE XI. 1200-bps and 2400-bps asynchronous operational parameters - Continued

Data rate (bps)	Char length (bits)	Intlv degree	super blocks	Number of bits encoded	Number of source bits	fill bits	Seq number length (bits)
2400	9	1	144	5760	5760	0	256
2400	9	36	7	10080	10080	0	448
2400	9	72	3	8640	8640	0	384
2400	9	288	1	11520	11520	0	512
2400	10	1	144	5760	5760	0	256
2400	10	36	7	10080	10080	0	448
2400	10	72	3	8640	8640	0	384
2400	10	288	1	11520	11520	0	512
2400	11	1	151	6040	6039	1	267
2400	11	33	9	11880	11880	0	528
2400	11	71	3	8520	8514	6	370
2400	11	297	1	11880	11880	0	528
2400	12	1	144	5760	5760	0	256
2400	12	36	7	10080	10080	0	448
2400	12	72	3	8640	8640	0	384
2400	12	288	1	11520	11520	0	512

APPENDIX B

TABLE B-XII. Probability of bit error vs signal-to-noise ratio.

Signal-to-noise ratio (dB in 3-kHz bandwidth)	Probability of bit error	
	2400 bps	1200 bps
5	8.6 E-2	6.4 E-2
10	3.5 E-2	4.4 E-3
15	1.0 E-2	3.4 E-4
20	1.0 E-3	9.0 E-6
30	1.8 E-4	2.7 E-6
	Probability of bit error	
	300 bps	75 bps
0	1.8 E-2	4.4 E-4
2	6.4 E-3	5.0 E-5
4	1.0 E-3	1.0 E-6
6	5.0 E-5	1.0 E-6
8	1.5 E-6	1.0 E-6

NOTE: Two independent equal average-power Rayleigh fading paths, with 2-Hz fading bandwidth and 2-ms multipath spread.

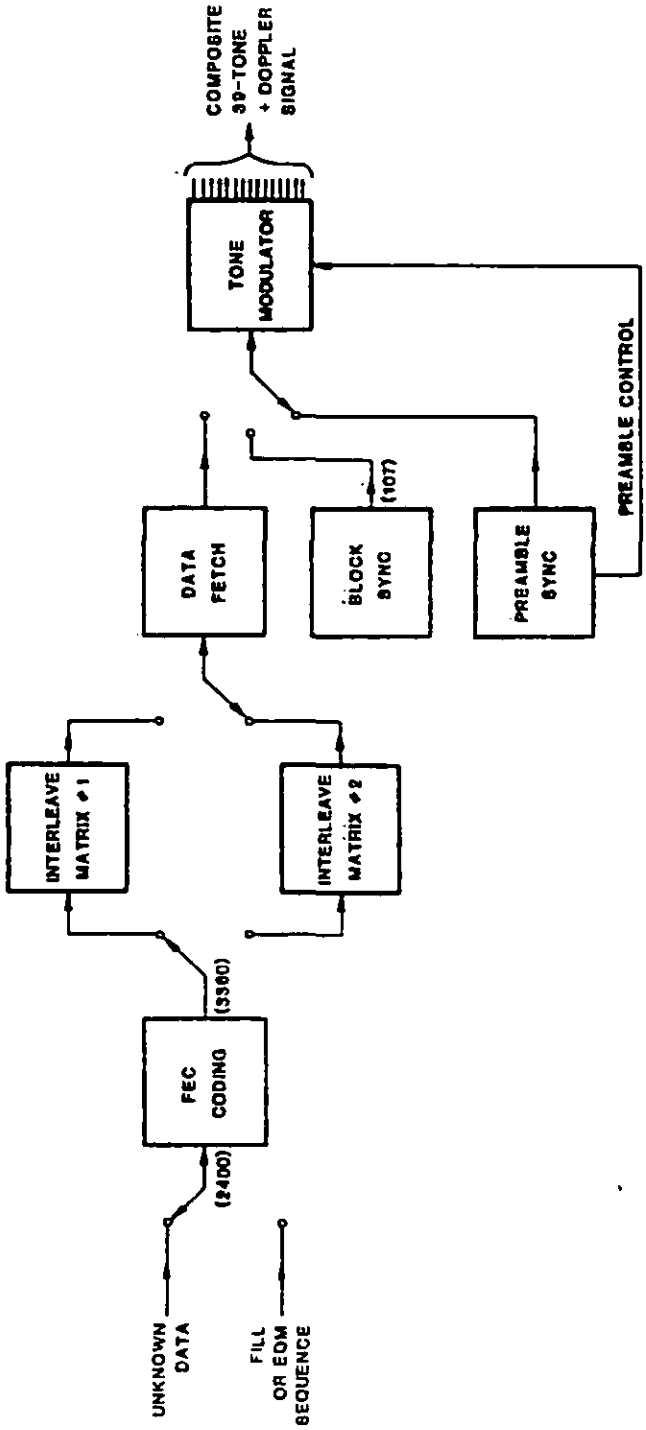

FIGURE B-1. Transmit direction functional diagram.

APPENDIX B

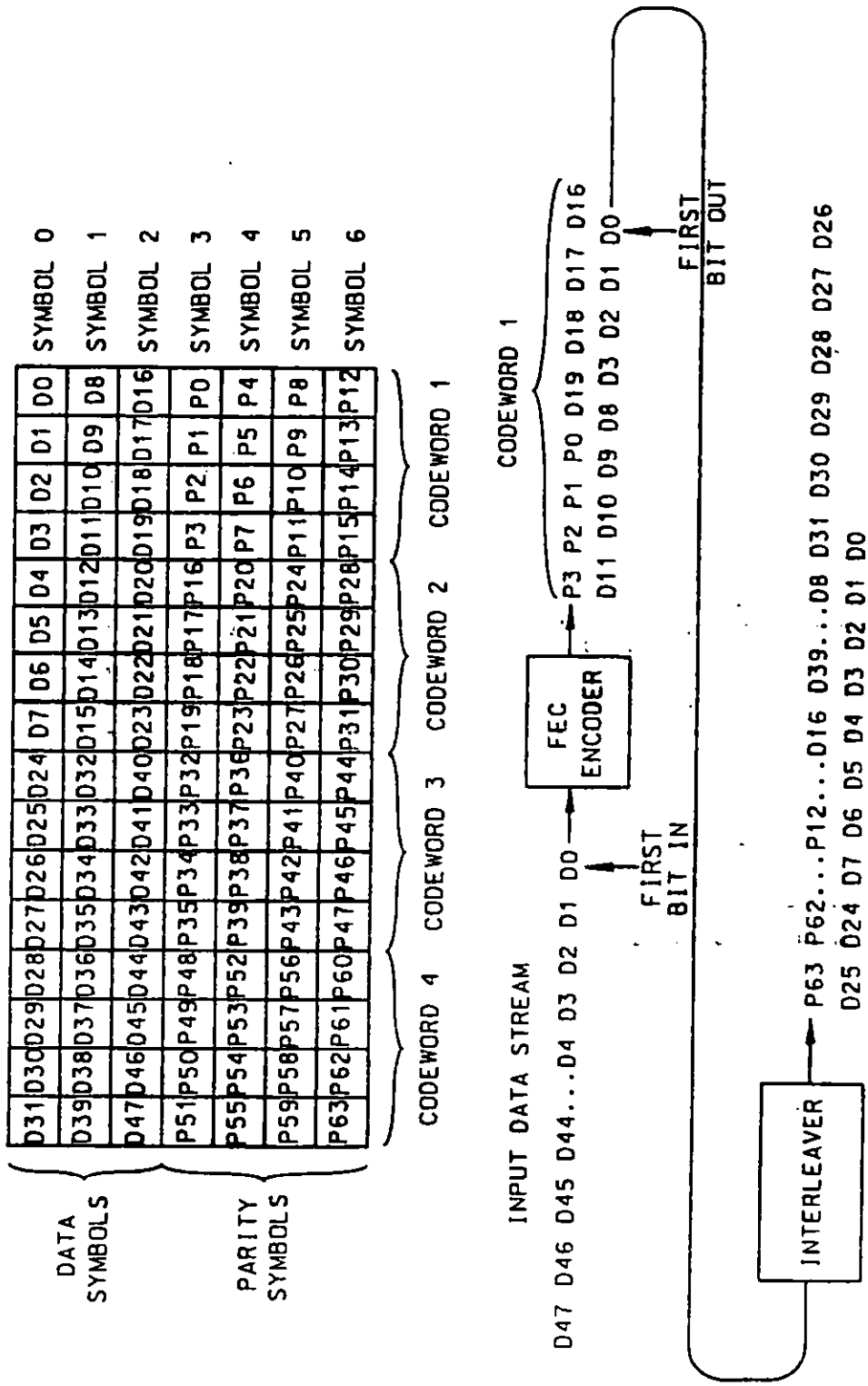

FIGURE B-2. Data flow through encoder and interleaver for an interleaver containing an even number of code words.

APPENDIX B

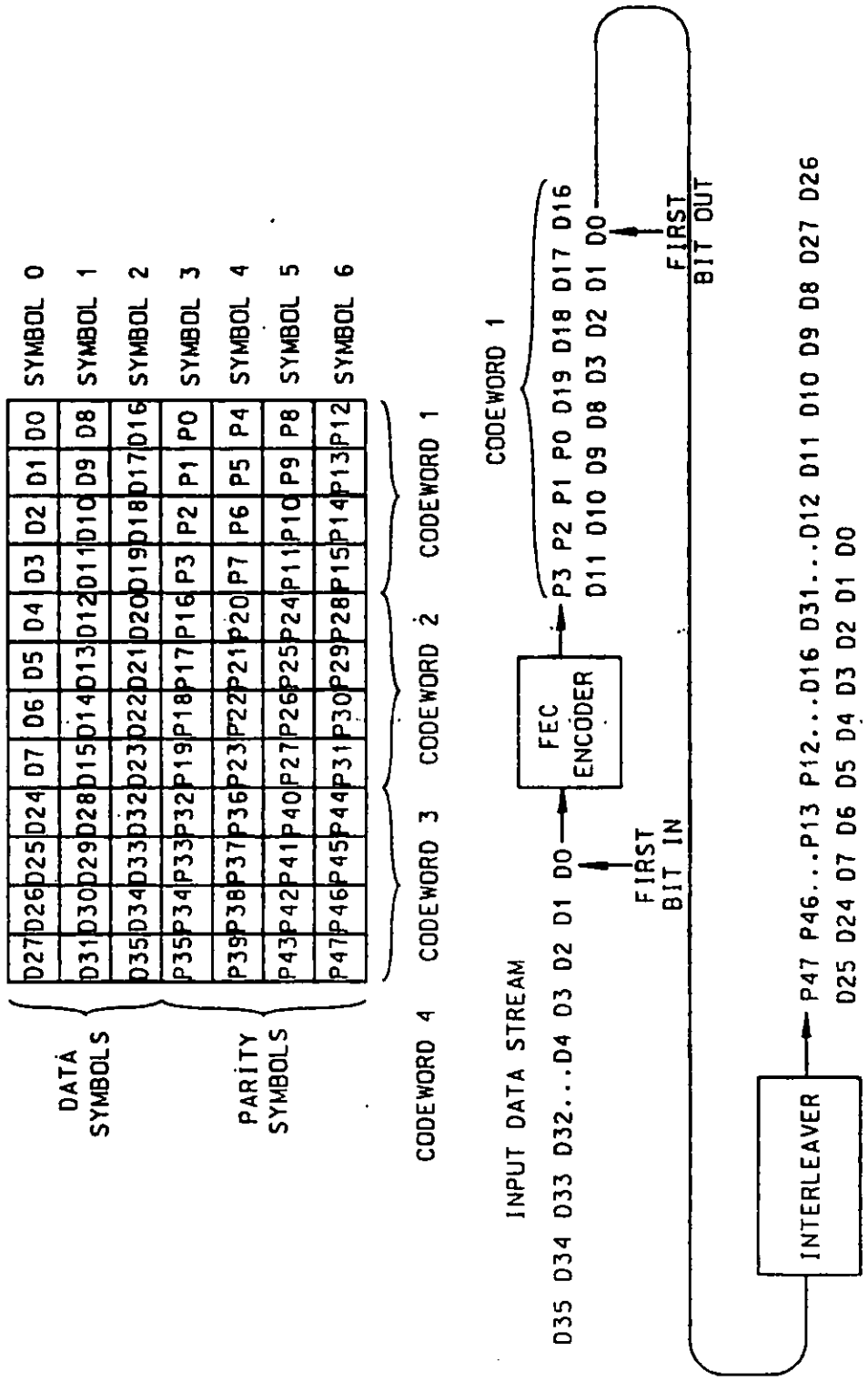

FIGURE B-3. Data flow through encoder and interleaver for an interleaver containing an odd number of code words.

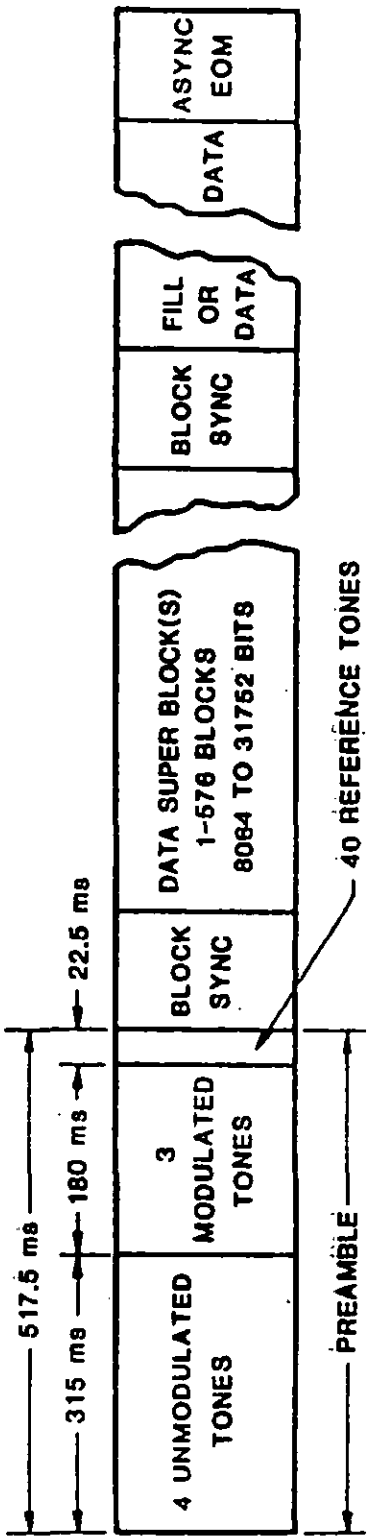

FIGURE B-4. Transmit sequence of events.

APPENDIX B

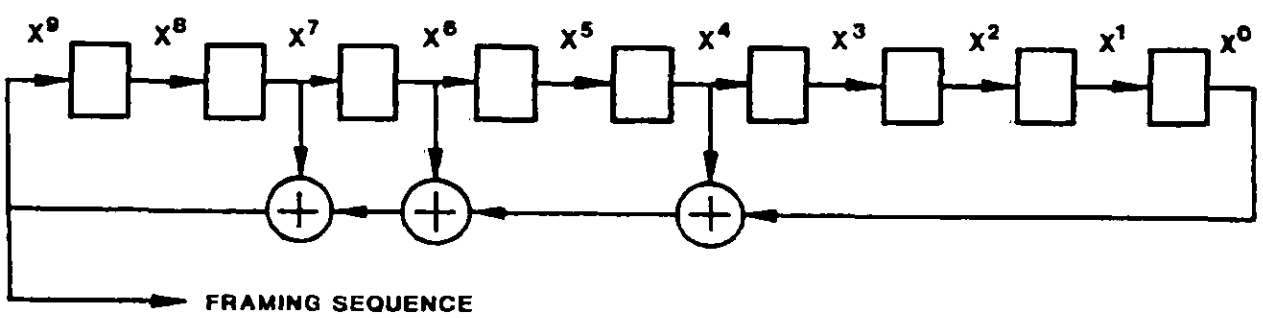

FIGURE B-5. Framing sequence feedback shift register generator.

CONCLUDING MATERIAL

Custodians:
Air Force - 90
Army - SC
Navy - EC

Preparing activity:
Air Force - 90

Review activities:
Army - CR
Navy - MC
DOD - DC, NS, JT

(Project TCTS-1103)

INSTRUCTIONS: In a continuing effort to make our standardization documents better, the DoD provides this form for use in submitting comments and suggestions for improvements. All users of military standardization documents are invited to provide suggestions. This form may be detached, folded along the lines indicated, taped along the loose edge *(DO NOT STAPLE)*, and mailed. In block 5, be as specific as possible about particular problem areas such as wording which required interpretation, was rigid, restrictive, loose, ambiguous, or was incompatible, and give proposed wording changes which would alleviate the problems. Enter in block 6 any remarks not related to a specific paragraph of the document. If block 7 is filled out, an acknowledgement will be mailed to you within 30 days to let you know that your comments were received and are being considered.

NOTE: This form may not be used to request copies of documents, nor to request waivers, deviations, or clarification of specification requirements on current contracts. Comments submitted on this form do not constitute or imply authorization to waive any portion of the referenced document*(s)* or to amend contractual requirements.

☆ U.S. Government Printing Office: 1982—350-679/5894

(Fold along this line)

(Fold along this line)

NO POSTAGE NECESSARY IF MAILED IN THE UNITED STATES

OFFICIAL BUSINESS
PENALTY FOR PRIVATE USE $300

BUSINESS REPLY MAIL

FIRST CLASS PERMIT NO. 73236 WASH DC

POSTAGE WILL BE PAID BY HQ U.S. AIR FORCE

☆U.S.GPO:1980-0-181-115

STANDARDIZATION DOCUMENT IMPROVEMENT PROPOSAL

(See Instructions – Reverse Side).

1. DOCUMENT NUMBER	2. DOCUMENT TITLE
MIL-STD-188-110A	Interoperability and Performance Standards for Data Modems

3a. NAME OF SUBMITTING ORGANIZATION	4. TYPE OF ORGANIZATION *(Mark one)*
	☐ VENDOR
	☐ USER
b. ADDRESS *(Street, City, State, ZIP Code)*	☐ MANUFACTURER
	☐ OTHER *(Specify)*: _____

5. PROBLEM AREAS

a. Paragraph Number and Wording:

b. Recommended Wording:

c. Reason/Rationale for Recommendation:

6. REMARKS

7a. NAME OF SUBMITTER *(Last, First, MI)* – Optional	b. WORK TELEPHONE NUMBER *(Include Area Code)* – Optional
c. MAILING ADDRESS *(Street, City, State, ZIP Code)* – Optional	8. DATE OF SUBMISSION *(YYMMDD)*

DD FORM 82 MAR 1426 PREVIOUS EDITION IS OBSOLETE.

(TO DETACH THIS FORM, CUT ALONG THIS LINE.)