FED. SUP CLASS
1660

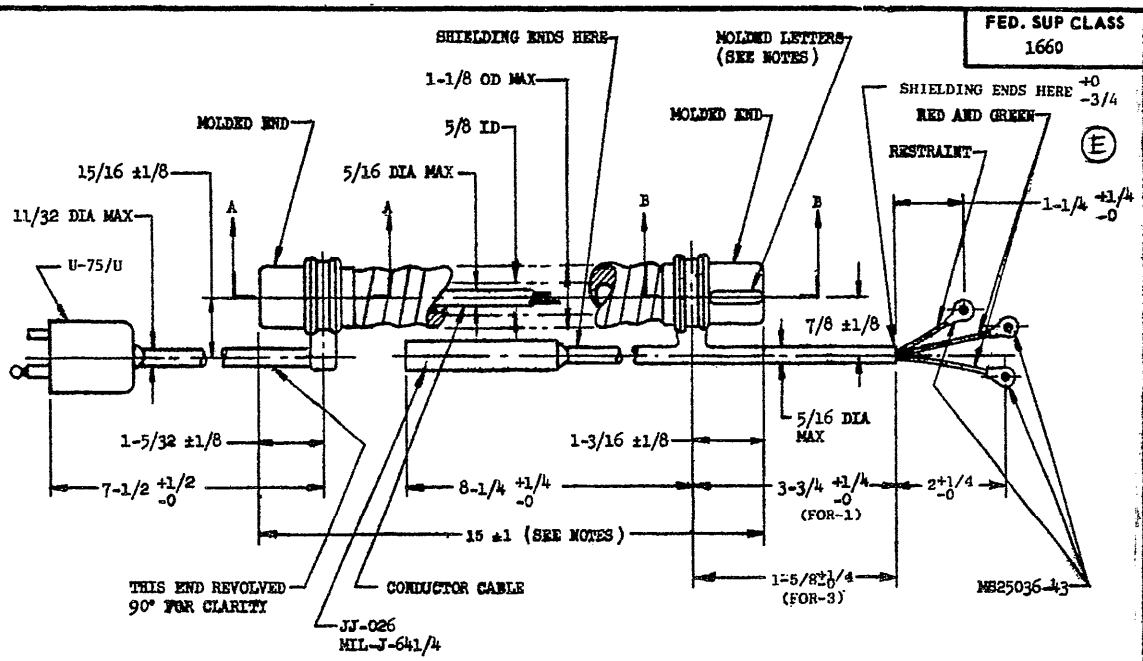

TYPE II

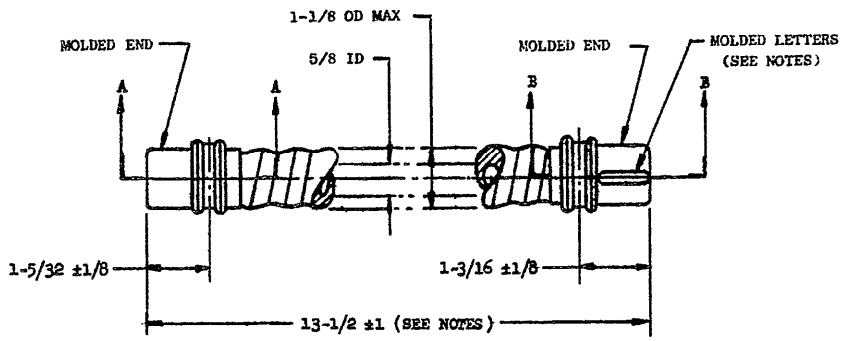

TYPE I

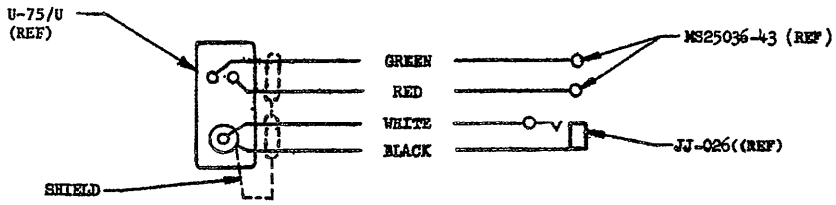

WIRING SCHEMATIC (FOR TYPE II ONLY)

DASH NO.	TYPE	INTENDED USE
-1	TYPE II (W/CABLE)	MIL-M-6482 (OXYGEN MASK)
-2	TYPE I (W/O CABLE)	
-3	TYPE II (W/CABLE)	MIL-M-19417 (SMOKE MASK)

(E) DENOTES CHANGES

NOTICE - REVIEW/USER INFORMATION IS CURRENT AS OF DATE OF THIS DOCUMENT. FOR FUTURE COORDINATION OF CHANGES TO THIS DOCUMENT, DRAFT CIRCULATION SHOULD BE BASED ON THE INFORMATION IN THE CURRENT DODISS.

REVIEWERS: USER:
ARMY - AV
USAF - 11 and 99
NAVY - AS

This military standard is approved by the Department of Defense and is mandatory for use by all Departments & Agencies of the Department of Defense. Selection for all new engineering and design applications and for repetitive use shall be made from this document.

APPROVED 15 MAR 65 REVISED (A) 15 Sep 1965 (B) 30 Mar 1966 (C) 29 September 1966 (D) 10 MAR 1967 (E) 11 FEB 83

P.A. Navy-AS Other Cust Army - AV Air Force - 11	TITLE HOSE ASSEMBLY, OXYGEN MASK TO CONNECTOR	MILITARY STANDARD MS90339
PROCUREMENT SPECIFICATION MIL-H-81581/4 (E)	SUPERSEDES: ACEL DWG 3301079-2, -3	SHEET 1 OF 2

DD FORM 1 SEP 57 672-1 (Coordinated) PREVIOUS EDITIONS OF THIS FORM ARE OBSOLETE. PROJECT NO. 1660-0480 PLATE NO. 15320

FED. SUP CLASS
1660

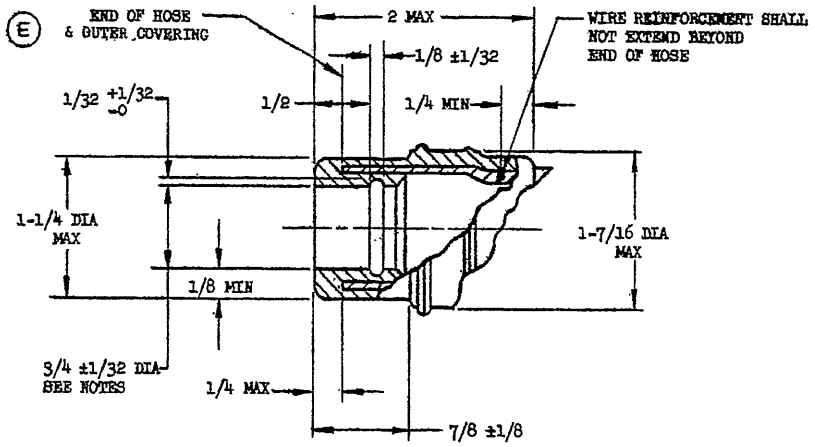

SECTION A-A

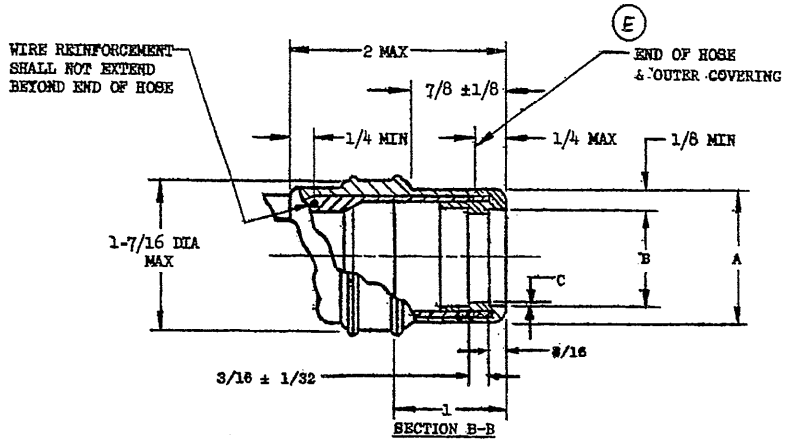

SECTION B-B

DASH NO	"A" DIA	"B" DIA	C
-1&-2	1 1/4 MAX	29/32 ± 1/32	1/32 + 1/32 -0
-3	1 3/16 MAX	7/8	——

NOTES:

(E) 1. MATERIAL: HOSE ASSEMBLY SHALL BE FABRICATED IN ACCORDANCE WITH MIL-H-81581/4. DIMENSIONING AND TOLERANCING SHALL BE IN ACCORDANCE WITH ANSI Y14.5.

2. DIMENSIONS IN INCHES. UNLESS OTHERWISE SPECIFIED, TOLERANCES: FRACTIONS ±1/16,

3. THE INSIDE DIAMETER AND THE LENGTH OF THE HOSE SHALL BE MEASURED WITH THE HOSE IN A RELAXED, HORIZONTAL POSITION.

4. MOLD "MASK END" IN LOCATION SHOWN IN 1/16 INCH HIGH LETTERS.

5. ORIENTATION OPTIONAL.

~~6. THE ELECTRICAL PORTION OF THE HOSE ASSEMBLY SHALL MEET THE TEST REQUIREMENTS IN THE FOLLOWING PARAGRAPHS OF MIL-C-21479.~~

~~(a.) PARAGRAPH 4.5.4.1 ELECTRICAL CONTINUITY~~
~~(b.) PARAGRAPH 4.5.4.2 INSULATION RESISTANCE~~
~~(c.) PARAGRAPH 4.5.4.4 CONNECTORS~~

~~7. THE ABOVE TESTS SHALL BE CONDUCTED IN ACCORDANCE WITH PARAGRAPH 4.5.8 OF MIL-H-25486, INSPECTION LEVEL I, TABLE IIIA.~~

(E) 8. FOR ELECTRICAL REQUIREMENTS, SEE NADC DWG. 80206/32A1322

(E) 9. FOR OXYGEN HOSE INDEX, SEE DWG. NO. 30003/280AS100

FOR DESIGN FEATURE PURPOSES, THIS STANDARD TAKES PRECEDENCE OVER PROCUREMENT DOCUMENTS REFERENCED HEREIN. REFERENCED DOCUMENTS SHALL BE OF THE ISSUE IN EFFECT ON DATE OF INVITATIONS FOR BID.

APPROVED 15 MAR 65 REVISED (E) FOR CHANGES SEE SHEETS 1 AND 2

NOTICE - REVIEW/USER INFORMATION IS CURRENT AS OF DATE OF THIS DOCUMENT. FOR FUTURE COORDINATION OF CHANGES TO THIS DOCUMENT, DRAFT CIRCULATION SHOULD BE BASED ON THE INFORMATION IN THE CURRENT DODISS.

REVIEWERS: USER: ARMY - AV USAF - 11 and 99 NAVY - AS

This military standard is approved by the Department of Defense and is mandatory for use by all Departments & Agencies of the Department of Defense. Selection for all new engineering and design applications and for repetitive use shall be made from this document.

P.A. Navy - AS Other Cust Army - AV Air Force - 11	TITLE HOSE ASSEMBLY, OXYGEN MASK TO CONNECTOR	MILITARY STANDARD MS 90339
PROCUREMENT SPECIFICATION MIL-H-81581/4 (E)	SUPERSEDES: AGEL DWG 33C1079-2, -3	SHEET 2

DD FORM 1 SEP 57 672-1 (Coordinated) PREVIOUS EDITIONS OF THIS FORM ARE OBSOLETE. PLATE NO. 15320