AMSC N/A

DISTRIBUTION STATEMENT A. Approved for public release; distribution is unlimited.

This military standard is approved for use by all Departments and Agencies of the Department of Defense. Selection for all new engineering and design applications and for repetitive use shall be made from this document when applicable.

REVIEWER ACTIVITIES:
ARMY - AV, ER, ME, MI
AIR FORCE - 82
DLA - IS

USER ACTIVITIES:
ARMY - AT
NAVY - AS, MC

DD FORM 1 MAY 72 672-1 (COORDINATED)

PREV EDITIONS OF THIS FORM ARE OBSOLETE

5365-0140

PA NAVY - OS
Other Cust ARMY - AR
AIR FORCE - 99

PROCUREMENT SPECIFICATION MIL-R-21248

SUPERSEDES MS9012 (ASG) AND MS9013 (ASG)

INTERNATIONAL INTEREST

TITLE RING, RETAINING, EXTERNAL, BASIC (TAPERED SECTION TYPE)

MILITARY STANDARD

MS16624

PAGE 1 OF 9

FED SUP CLASS 5365

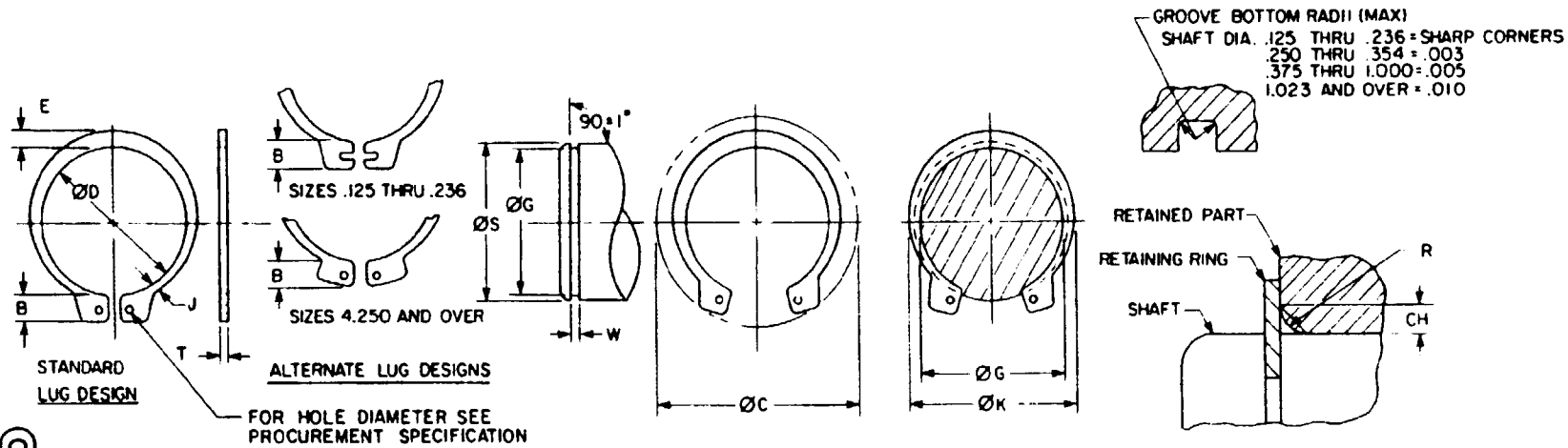

© ENTIRE STANDARD REVISED

TABLE I. DIMENSIONS

Ø S SHAFT (REF)		Ø D FREE		B LUG HEIGHT		E LARGE SECTION HEIGHT		J SMALL SECTION HEIGHT		T 1/ THICKNESS		Ø G RECOMMENDED GROOVE (REF)		W WIDTH RECOMMENDED GROOVE (REF)		Ø K 3/	Ø C 4/ CLEAR	R 5/ OF RETAINED PART (REF)	CH 5/ OF RETAINED PART (REF)
INCH	MM	BASIC	TOL	BASIC	TOL	BASIC	TOL	BASIC	TOL	BASIC	TOL	BASIC	TOL	BASIC	TOL	MAX		MAX	MAX
.125	3.2	.112	+.002 -.004	.046	±.002	.018	±.0015	.011	±.0015	.010	±.001	.117	±.0015	.012	+.002 -.000	.148	.222	.010	.006
.156	4.0	.142		.054		.026		.016		.010		.146		.012		.189	.270	.015	.009
.188	4.8	.168		.050		.025		.016		.015		.175		.018		.218	.298	.014	.008
.197	5.0	.179		.056		.026	±.002	.016	±.002	.015		.185	.0015 FIM 2/	.018		.229	.319	.014	.009
.219	5.6	.196		.056		.028		.017		.015		.205		.018		.252	.338	.015	.009
.236	6.0	.215		.056		.030		.019		.015		.222		.018		.272	.355	.016	.010
.250	6.4	.225	+.002 -.005	.080	±.003	.035		.025		.025		.230		.030		.290	.450	.018	.011
.276	7.0	.250		.081		.035		.024		.025		.255		.030		.315	.480	.017	.010
.281	7.1	.256		.080		.038		.025		.025		.261		.030		.326	.490	.020	.012
.312	7.9	.281		.087		.040		.026		.025		.290		.030		.357	.540	.020	.012
.344	8.7	.309		.087		.042	±.003	.026	±.003	.025		.321	±.002	.030		.390	.570	.021	.012
.354	9.0	.320		.087		.046		.029		.025	±.002	.330		.030		.405	.598	.023	.014
.375	9.5	.338		.088		.050		.030		.025		.352	.002 FIM 2/	.030	+.003 -.000	.433	.610	.026	.015
.394	10.0	.354		.087		.052		.031		.025		.369		.030		.452	.620	.027	.016
.406	10.3	.366		.087		.054		.033		.025		.382		.030		.468	.630	.028	.017
.438	11.1	.395		.088		.055		.033		.025		.412		.030		.501	.660	.029	.017
.469	11.9	.428		.088		.060		.035		.025		.443		.030		.540	.680	.031	.018
.500	12.7	.461		.108		.065		.040		.035		.468	±.002	.040		.574	.770	.034	.020
.551	14.0	.509	+.005 -.010	.108		.053		.036		.035		.519	.004 FIM 2/	.040		.611	.810	.027	.016
.562	14.3	.521		.108		.072	±.004	.041	±.004	.035		.530		.040		.644	.820	.038	.023
.594	15.1	.550		.109		.076		.043		.035		.559	±.003	.040		.680	.860	.039	.023
.625	15.9	.579		.110		.080		.045		.035		.588		.040		.715	.900	.041	.025
.669	17.0	.621		.110		.082		.043		.035		.629	.004 FIM 2/	.040		.756	.930	.040	.024
.672	17.1	.621		.110		.082		.043		.035		.631		.040		.758	.930	.040	.024

APPROVED 11 DEC 1958 REVISED (A) 24 JUNE 1969 (B) 8 NOV 1984 (C) 18 APRIL 1990

This military standard is approved for use by all Departments and Agencies of the Department of Defense. Selection for all new engineering and design applications and for repetitive use shall be made from this document when applicable.

ARMY - AV, ER, ME, MI
AIR FORCE - 82
DLA - IS

ARMY - AT
NAVY - AS, MC

TABLE I. DIMENSIONS - CONTINUED

Ø S SHAFT (REF)		Ø D FREE		B LUG HEIGHT		E LARGE SECTION HEIGHT		J SMALL SECTION HEIGHT		T 1/ THICKNESS		Ø G RECOMMENDED GROOVE (REF)		W WIDTH RECOMMENDED GROOVE (REF)		Ø K 3/	Ø C 4/ CLEAR	R 5/ OF RETAINED PART (REF)	CH 5/ OF RETAINED PART (REF)
INCH	MM	BASIC	TOL	BASIC	TOL	BASIC	TOL	BASIC	TOL	BASIC	TOL	BASIC	TOL	BASIC	TOL	MAX		MAX	MAX
.688	17.5	.635		.136		.084		.048		.042		.646		.047		.779	1.010	.042	.025
.750	19.0	.693		.136		.092		.051		.042		.704		.047		.850	1.090	.046	.027
.781	19.8	.722		.136		.094		.052		.042		.733		.047		.883	1.120	.047	.028
													±.003		+.003 -.000				
.812	20.6	.751	+.005 -.010	.136		.096	±.005	.054	±.005	.042		.762		.047		.914	1.150	.047	.028
.875	22.2	.810		.137		.104		.057		.042		.821	.004 FIM 2/	.047		.987	1.210	.051	.030
.938	23.8	.867		.166		.110		.063		.042		.882		.047		1.054	1.340	.055	.033
.984	25.0	.910		.167		.114		.064		.042		.926		.047		1.106	1.390	.056	.033
1.000	25.4	.925		.167		.116		.065		.042	±.002	.940		.047		1.122	1.410	.057	.034
1.023	26.0	.946		.168		.118		.066		.042		.961		.047		1.147	1.430	.058	.035
1.062	27.0	.982		.181		.122		.069		.050		.998		.056		1.192	1.500	.060	.036
1.125	28.6	1.041		.182		.128		.071		.050		1.059		.056		1.261	1.550	.063	.038
1.188	30.2	1.098		.182		.132		.072		.050		1.118	±.004	.056		1.325	1.610	.064	.038
			+.010 -.015																
1.250	31.7	1.156		.183	±.004	.140		.076		.050		1.176	.005 FIM 2/	.056		1.396	1.690	.068	.041
1.312	33.3	1.214		.183		.146		.076		.050		1.232		.056		1.458	1.750	.068	.041
1.375	34.9	1.272		.184		.152		.082		.050		1.291		.056		1.529	1.800	.072	.043
1.438	36.5	1.333		.184		.160		.086		.050		1.350		.056	+.004 -.000	1.600	1.870	.076	.045
1.500	38.1	1.387		.214		.168	±.006	.091	±.006	.050		1.406		.056		1.668	1.990	.079	.047
1.562	39.7	1.446		.235		.172		.093		.062		1.468		.068		1.740	2.100	.082	.049
1.625	41.3	1.503		.235		.180		.097		.062		1.529		.068		1.812	2.170	.087	.052
1.688	42.9	1.560		.235		.184		.099		.062		1.589	±.005	.068		1.877	2.240	.090	.054
1.750	44.4	1.618	+.013 -.020	.237		.188		.101		.062		1.650		.068		1.945	2.310	.091	.054
													.005 FIM 2/						
1.772	45.0	1.637		.237		.190		.102		.062		1.669		.068		1.967	2.330	.092	.055
1.812	46.0	1.675		.238		.192		.102		.062		1.708		.068		2.010	2.380	.092	.055
1.875	47.6	1.735		.239		.196		.104		.062		1.769		.068		2.076	2.440	.094	.056
1.969	50.0	1.819		.245		.200		.106		.062		1.857		.068		2.170	2.540	.094	.056
2.000	50.8	1.850		.239		.204		.108		.062		1.886		.068		2.205	2.550	.096	.057
2.062	52.4	1.906		.266		.208		.111		.078		1.946		.086		2.275	2.680	.098	.059
2.125	54.0	1.964		.266		.212		.113		.078	±.003	2.003		.086		2.337	2.750	.098	.059
2.156	54.8	1.993		.266		.212		.113		.078		2.032		.086		2.366	2.780	.097	.058
2.250	57.1	2.081	+.015 -.025	.267		.220		.116		.078		2.120		.086		2.466	2.870	.100	.060
2.312	58.7	2.139		.267		.222		.118		.078		2.178	±.006	.086		2.528	2.940	.100	.060
2.375	60.3	2.197		.267		.224		.119		.078		2.239		.086	+.005 -.000	2.591	3.010	.100	.060
2.438	61.9	2.255		.268	±.005	.228	±.007	.120	±.007	.078		2.299	.006 FIM 2/	.086		2.657	3.070	.102	.061
2.500	63.5	2.313		.268		.232		.122		.078		2.360		.086		2.724	3.120	.104	.062
2.559	65.0	2.377		.268		.238		.125		.078		2.419		.086		2.792	3.180	.108	.065
2.625	66.7	2.428		.268		.242		.127		.078		2.481		.086		2.860	3.250	.109	.066
2.688	68.3	2.485	+.020 -.030	.268		.246		.129		.078		2.541		.086		2.926	3.320	.111	.067
2.750	69.8	2.543		.310		.248		.131		.093		2.602		.103		2.992	3.450	.112	.067
2.875	73.0	2.659		.308		.256		.133		.093		2.721		.103		3.122	3.570	.115	.069

This military standard is approved for use by all Departments and Agencies of the Department of Defense. Selection for all new engineering and design applications and for repetitive use shall be made from this document when applicable.

REVIEWER ACTIVITIES:
ARMY - AV, ER, ME, MI
AIR FORCE - 82
DLA - IS

USER ACTIVITIES:
ARMY - AT
NAVY - AS, MC

DD FORM 1426 672-1

PA: NAVY - OS
Other Cust: ARMY - AR, AIR FORCE - 99

INTERNATIONAL INTEREST

PROCUREMENT SPECIFICATION: MIL-R-21248

SUPERSEDES: MS9012(ASG) AND MS9013(ASG)

TITLE: RING, RETAINING, EXTERNAL, BASIC (TAPERED SECTION TYPE)

MILITARY STANDARD

MS16624

PAGE 3 OF 9

TABLE I. DIMENSIONS - CONTINUED

ØS SHAFT (REF)		ØD FREE		B LUG HEIGHT		E LARGE SECTION HEIGHT		J SMALL SECTION HEIGHT		T 1/ THICKNESS		ØG RECOMMENDED GROOVE (REF)		W WIDTH		ØK 3/	ØC 4/ CLEAR	R 5/ OF RETAINED PART (REF)	CH 5/
INCH	MM	BASIC	TOL	BASIC	TOL	BASIC	TOL	BASIC	TOL	BASIC	TOL	BASIC	TOL	BASIC	TOL	MAX		MAX	MAX
2.938	74.6	2.717		.308		.260	±.007	.136	±.007	.093		2.779		.103		3.187	3.640	.116	.070
3.000	76.2	2.775		.308		.264		.138		.093		2.838		.103		3.252	3.690	.117	.070
3.062	77.8	2.832		.298		.252		.131		.093		2.898		.103		3.294	3.740	.107	.064
3.125	79.4	2.892		.308		.272		.141		.093		2.957		.103		3.383	3.820	.120	.072
3.156	80.2	2.920		.308		.274		.143		.093		2.986		.103		3.415	3.850	.120	.072
3.250	82.0	3.006		.308	±.005	.280	±.008	.145		.093		3.076		.103		3.515	3.950	.123	.074
3.346	85.0	3.092		.308		.286		.147		.093		3.166		.103		3.613	4.040	.126	.076
3.438	87.3	3.179		.308		.292		.148	±.008	.093		3.257		.103		3.712	4.140	.129	.077
3.500	88.9	3.237	+.020 -.030	.328		.285		.148		.109		3.316	±.006	.120		3.764	4.250	.122	.073
3.543	90.0	3.277		.328		.288		.149		.109	±.003	3.357		.120	+.005 -.000	3.809	4.290	.123	.074
3.625	92.0	3.352		.328		.296		.153		.109		3.435	.006 FIM 2/	.120		3.898	4.370	.127	.076
3.688	93.7	3.410		.330		.302		.156		.109		3.493		.120		3.966	4.430	.129	.078
3.750	95.2	3.468		.332		.310		.160		.109		3.552		.120		4.037	4.500	.133	.080
3.875	98.4	3.584		.330		.318		.163		.109		3.673		.120		4.169	4.600	.137	.082
3.938	100.0	3.642		.342		.318		.163		.109		3.734		.120		4.230	4.700	.137	.082
4.000	101.6	3.700		.352		.318		.163		.109		3.792		.120		4.288	4.780	.135	.081
4.250	108.0	3.989		.395		.318		.176		.109		4.065		.120		4.558	5.090	.146	.088
4.375	111.1	4.106		.395		.318		.181		.109		4.190		.120		4.683	5.220	.146	.088
4.500	114.3	4.223		.404		.285		.128		.109		4.310		.120		4.730	5.370	.102	.061
4.750	120.6	4.458		.429		.303		.136		.109		4.550		.120		4.996	5.670	.115	.069
5.000	127.0	4.692		.450	±.008	.360	±.010	.194	±.010	.109		4.790		.120		5.346	5.960	.165	.099
5.250	133.3	4.927		.472		.372		.211		.125		5.030	±.007	.139	+.006 -.000	5.605	6.270	.169	.101
5.500	139.7	5.162	+.020 -.040	.497		.390		.209		.125	±.004	5.265		.139		5.867	6.570	.175	.105
5.750	146.0	5.396		.518		.408		.220		.125		5.505	.006 FIM 2/	.139		6.134	6.860	.184	.110
6.000	152.4	5.631		.540		.381		.171		.125		5.745		.139		6.302	7.160	.143	.086
6.250	158.7	5.866		.561		.396		.176		.156		5.985		.174		6.568	7.460	.148	.089
6.500	165.1	6.100	+.020 -.050	.586		.438		.236		.156		6.225		.174		6.905	7.870	.191	.114
6.750	171.4	6.335		.608		.456		.246		.156		6.465	±.008	.174	+.008 -.000	7.172	8.060	.200	.120
7.000	177.8	6.570		.530		.474		.256		.156		6.705		.174		7.439	8.360	.208	.125
7.500	190.5	7.009		.676	±.012	.507	±.015	.277	±.015	.187	±.005	7.180	.006 FIM 2/	.209		7.963	8.960	.220	.132
8.000	203.2	7.478		.735		.540		.294		.187		7.660		.209		8.493	9.600	.235	.141
8.500	215.9	7.947	+.050 -.130	.735		.573		.314		.187		8.140		.209		9.023	10.100	.250	.150
9.000	228.6	8.415		.735		.609		.333		.187		8.620		.209		9.557	10.600	.267	.160
9.500	241.3	8.885		.735		.642		.350		.187		9.100		.209		10.086	11.100	.281	.168
10.000	254.0	9.355		.735		.675		.367		.187		9.575		.209		10.610	11.600	.294	.176

FOR FOOTNOTES SEE PAGE 4

FED SUPPLY CLASS 5365

APPROVED 11 DEC 1958 REVISED © FOR CHANGES SEE PAGES 1 THRU 9

5365-0140

1/ T - THICKNESS "T" APPLIES TO UNPLATED RINGS. FOR CORROSION RESISTANT STEEL AND PLATED RINGS, +.002 SHOULD BE ADDED TO THE MAXIMUM TOLERANCE, i.e. ±.002 SHOULD BE +.004/-.002.

2/ FIM - (FULL INDICATOR MOVEMENT) IS THE MAXIMUM ALLOWABLE DEVIATION OF CONCENTRICITY BETWEEN THE GROOVE AND THE SHAFT.

3/ R - MAXIMUM DIAMETER WHEN THE RING IS PROPERLY SEATED IN THE GROOVE. (DESIGN REFERENCE DIMENSION).

4/ C - ACTUAL CLEARANCE DIAMETER WHEN THE RING IS SPRUNG OVER THE SHAFT PRIOR TO INSTALLATION INTO THE GROOVE. (DESIGN REFERENCE DIMENSION).

5/ R AND CH - RADII OR CHAMFERS ALLOWABLE ON PARTS TO BE RETAINED BY THE RINGS. ALLOWABLE THRUST LOADS FOR RINGS RETAINING PARTS WITH MAXIMUM CORNER RADII OR CHAMFERS ARE LISTED IN TABLE VII ON PAGE 9.

REQUIREMENTS:

1. CLASSIFICATION: RETAINING RINGS FURNISHED UNDER THIS STANDARD SHALL BE TYPE I, CLASS 2 OF THE PROCUREMENT SPECIFICATION.

2. MATERIAL: CARBON SPRING STEEL, GRADE 1060 THRU 1095 (UNS G10600 THRU G10950) IN ACCORDANCE WITH ASTM A 568 OR ASTM A 682.
CORROSION RESISTANT STEEL, IN ACCORDANCE WITH AMS 5520 (UNS S15700).
BERYLLIUM COPPER, ALLOY NUMBER 170 (UNS C17000) OR ALLOY NUMBER 172 (UNS C17200) IN ACCORDANCE WITH ASTM B 194.

3. HARDNESS:

TABLE II. HARDNESS

∅ SHAFT (REF)	CARBON STEEL	CORROSION RESISTANT STEEL	BERYLLIUM COPPER
.125 TO .236			77 TO 82 HR15N
.250 TO .669	68.5-73.0 HR30N		
.688 TO 1.500	52.5-59.0 HR45N		
1.562 TO 3.437	46.0-51.0 HRC		
3.500 & ABOVE	44.0-49.0 HRC		
.250 TO .812		63-69.5 HR30N	
.875 & ABOVE		44-51 HRC	
.250 TO 1.023			56.5 TO 62 HR30N
1.062 & ABOVE			37 TO 43 HRC

4. PROTECTIVE FINISH OR SURFACE TREATMENT:

a. CARBON STEEL - SHALL BE (SEE TABLE III, IV OR V):

1. CADMIUM PLATE IN ACCORDANCE WITH QQ-P-416, TYPE II, CLASS 3 OR ASTM B 696, TYPE II, CLASS 5.

2. ZINC COAT IN ACCORDANCE WITH ASTM B633, TYPE II, CLASS Fe/Zn 5 OR ASTM B 695, TYPE II, CLASS 5.

3. PHOSPHATE COAT IN ACCORDANCE WITH DOD-P-16232, TYPE Z, CLASS 2.

b. CORROSION RESISTANT STEEL - SHALL BE CLEANED, DESCALED AND PASSIVATED IN ACCORDANCE WITH QQ-P-35.

c. BERYLLIUM COPPER - CADMIUM PLATE IN ACCORDANCE WITH QQ-P-416, TYPE II, CLASS 3 OR ASTM B 696, TYPE II, CLASS 5.

5. PART NUMBER: THE BASIC MS PART NUMBER IS FOLLOWED BY A DASH NUMBER TAKEN FROM TABLE III, IV OR V.

EXAMPLE: MS16624-1100 IS THE PART NUMBER FOR A CARBON STEEL CADMIUM PLATE, EXTERNAL BASIC RETAINING RING FOR USE ON A 1.000 SHAFT DIAMETER.

NOTES:

1. UNLESS OTHERWISE SPECIFIED, ALL DIMENSIONS ARE IN INCHES.

2. IN THE EVENT OF A CONFLICT BETWEEN THE TEXT OF THIS STANDARD AND THE REFERENCES CITED HEREIN, THE TEXT OF THIS STANDARD SHALL TAKE PRECEDENCE.

3. REFERENCED GOVERNMENT (OR NON-GOVERNMENT) DOCUMENTS OF THE ISSUE LISTED IN THAT ISSUE OF THE DEPARTMENT OF DEFENSE INDEX OF SPECIFICATIONS AND STANDARDS (DoDISS) SPECIFIED IN THE SOLICITATION FORM A PART OF THIS STANDARD TO THE EXTENT SPECIFIED HEREIN.

ARMY - AT
NAVY - AS, MC
AIR FORCE - 82
DLA - IS
APPROVED 11 DEC 1958 REVISED © FOR CHANGES SEE PAGES 1 THRU 9

document when applicable.

This military standard is approved for use by all Departments and Agencies of the Department of Defense. Selection for all new engineering and design applications and for repetitive use shall be made from this document when applicable.

REVIEWER ACTIVITIES:
ARMY - AV, ER, ME, MI
AIR FORCE - 82
DLA - IS

USER ACTIVITIES:
ARMY - AT
NAVY - AS, MC

PA
NAVY - OS
Other Cust
ARMY - AR
AIR FORCE - 99

INTERNATIONAL INTEREST

PROCUREMENT SPECIFICATION
MIL-R-21248

SUPERSEDES
MS9012 (ASG) AND MS9013 (ASG)

TITLE
RING, RETAINING, EXTERNAL, BASIC
(TAPERED SECTION TYPE)

MILITARY STANDARD
MS16624

PAGE 5 OF 9

TABLE III. DASH NUMBERS FOR MS16624

Ø S SHAFT (REF)	CARBON STEEL CAD PLATE 1/ DASH NO	CARBON STEEL ZINC COAT 1/ DASH NO	CARBON STEEL PHOSPHATE COAT 1/ DASH NO	CRES DASH NO	Be COPPER 1/ DASH NO	Be COPPER CAD PLATE 1/ DASH NO
.125					5012	5012-1
.156					5015	5015-1
.188					5018	5018-1
.197					5019	5019-1
.219					5021	5021-1
.236					5023	5023-1
.250	1025	2025	3025	4025	5025	5025-1
.276	1027	2027	3027	4027	5027	5027-1
.281	1028	2028	3028	4028	5028	5028-1
.312	1031	2031	3031	4031	5031	5031-1
.344	1034	2034	3034	4034	5034	5034-1
.354	1035	2035	3035	4035	5035	5035-1
.375	1037	2037	3037	4037	5037	5037-1
.394	1039	2039	3039	4039	5039	5039-1
.406	1040	2040	3040	4040	5040	5040-1
.438	1043	2043	3043	4043	5043	5043-1
.469	1046	2046	3046	4046	5046	5046-1
.500	1050	2050	3050	4050	5050	5050-1
.551	1055	2055	3055	4055	5055	5055-1
.562	1056	2056	3056	4056	5056	5056-1
.594	1059	2059	3059	4059	5059	5059-1
.625	1062	2062	3062	4062	5062	5062-1
.669	1066	2066	3066	4066	5066	5066-1
.672	1067	2067	3067	4067	5067	5067-1
.688	1068	2068	3068	4068	5068	5068-1
.750	1075	2075	3075	4075	5075	5075-1
.781	1078	2078	3078	4078	5078	5078-1
.812	1081	2081	3081	4081	5081	5081-1
.875	1087	2087	3087	4087	5087	5087-1
.938	1093	2093	3093	4093	5093	5093-1
.984	1098	2098	3098	4098	5098	5098-1
1.000	1100	2100	3100	4100	5100	5100-1
1.023	1102	2102	3102	4102	5102	5102-1

Ø S SHAFT (REF)	CARBON STEEL CAD PLATE 1/ DASH NO	CARBON STEEL ZINC COAT 1/ DASH NO	CARBON STEEL PHOSPHATE COAT 1/ DASH NO	CRES DASH NO	Be COPPER 1/ DASH NO	Be COPPER CAD PLATE 1/ DASH NO
1.062	1106	2106	3106	4106	5106	5106-1
1.125	1112	2112	3112	4112	5112	5112-1
1.188	1118	2118	3118	4118	5118	5118-1
1.250	1125	2125	3125	4125	5125	5125-1
1.312	1131	2131	3131	4131	5131	5131-1
1.375	1137	2137	3137	4137	5137	5137-1
1.438	1143	2143	3143	4143	5143	5143-1
1.500	1150	2150	3150	4150	5150	5150-1
1.562	1156	2156	3156	4156	5156	5156-1
1.625	1162	2162	3162	4162	5162	5162-1
1.688	1168	2168	3168	4168	5168	5168-1
1.750	1175	2175	3175	4175	5175	5175-1
1.772	1177	2177	3177	4177	5177	5177-1
1.812	1181	2181	3181	4181	5181	5181-1
1.875	1187	2187	3187	4187	5187	5187-1
1.969	1196	2196	3196	4196	5196	5196-1
2.000	1200	2200	3200	4200	5200	5200-1
2.062	1206	2206	3206	4206		
2.125	1212	2212	3212	4212		
2.156	1215	2215	3215	4215		
2.250	1225	2225	3225	4225		
2.312	1231	2231	3231	4231		
2.375	1237	2237	3237	4237		
2.438	1243	2243	3243	4243		
2.500	1250	2250	3250	4250		
2.559	1255	2255	3255	4255		
2.625	1262	2262	3262	4262		
2.688	1268	2268	3268	4268		
2.750	1275	2275	3275	4275		
2.875	1287	2287	3287	4287		
2.938	1293	2293	3293	4293		
3.000	1300	2300	3300	4300		
3.062	1306	2306	3306	4306		

Ø S SHAFT (REF)	CARBON STEEL CAD PLATE 1/ DASH NO	CARBON STEEL ZINC COAT 1/ DASH NO	CARBON STEEL PHOSPHATE COAT 1/ DASH NO	CRES DASH NO
3.125	1312	2312	3312	4312
3.156	1315	2315	3315	4315
3.250	1325	2325	3325	4325
3.346	1334	2334	3334	4334
3.438	1343	2343	3343	4343
3.500	1350	2350	3350	4350
3.543	1354	2354	3354	4354
3.625	1362	2362	3362	4362
3.688	1368	2368	3368	4368
3.750	1375	2375	3375	4375
3.875	1387	2387	3387	4387
3.938	1393	2393	3393	4393
4.000	1400	2400	3400	4400
4.250	1425	2425	3425	4425
4.375	1437	2437	3437	4437
4.500	1450	2450	3450	4450
4.750	1475	2475	3475	4475
5.000	1500	2500	3500	4500
5.250	1525	2525	3525	4525
5.500	1550	2550	3550	4550
5.750	1575	2575	3575	4575
6.000	1600	2600	3600	4600
6.250	1625	2625	3625	4625
6.500	1650	2650	3650	4650
6.750	1675	2675	3675	4675
7.000	1700	2700	3700	4700
7.500	1750	2750	3750	4750
8.000	1800	2800	3800	4800
8.500	1850	2850	3850	4850
9.000	1900	2900	3900	4900
9.500	1950	2950	3950	4950
10.000	2000	3000	4000	5000

1/ SUBSTITUTE CORROSION RESISTANT STEEL WHEN USED IN FOOD PROCESSING MACHINERY, OR IN FUEL OR LUBRICATION SYSTEMS, OR WHEN USED AT TEMPERATURES OVER 450°F (233°C).

APPROVED 11 DEC 1958 REVISED © FOR CHANGES SEE PAGES 1 THRU 9

FED SUP CLASS 5365

DD FORM 1 JAN 65 672-1 (OBSOLETE)

5365-0140

This military standard is approved for use by all Departments and Agencies of the Department of Defense. Selection for all new engineering and design applications and for specifications shall be made from this document when applicable.

REVIEWER ACTIVITIES:
ARMY - AV, ER, ME, MI
AIR FORCE - 82
DLA - IS

USER ACTIVITIES:
ARMY - AT
NAVY - AS, MC

P.A. NAVY - OS
Other Cust ARMY - AR
AIR FORCE - 99

PROCUREMENT SPECIFICATION MIL-R-21248

SUPERSEDES MS9012 (ASG) AND MS9013 (ASG)

INTERNATIONAL INTEREST

TITLE RING, RETAINING, EXTERNAL, BASIC (TAPERED SECTION TYPE)

MILITARY STANDARD

MS16624

PAGE 6 OF 9

DD FORM 672-1 (COORDINATED)

FED SUP CLASS 5365

TABLE IV. SUBSTITUTION TABLE (CROSS REFERENCE OF PART NUMBERS

⌀S SHAFT (REF)	INACTIVE CARBON STEEL MS9013	INACTIVE CARBON STEEL MS16624	SUBST CARBON STEEL 1/ CADMIUM PLATE MS16624	SUBST CARBON STEEL 1/ ZINC COAT MS16624	SUBST CARBON STEEL 1/ PHOSPHATE COAT MS16624
.250	01	25	1025	2025	3025
.276	02	27	1027	2027	3027
.281	03	28	1028	2028	3028
.312	04	31	1031	2031	3031
.344	05	34	1034	2034	3034
.354	06	35	1035	2035	3035
.375	07	37	1037	2037	3037
.394	08	39	1039	2039	3039
.406	09	40	1040	2040	3040
.438	10	43	1043	2043	3043
.469	11	46	1046	2046	3046
.500	12	50	1050	2050	3050
.551	13	55	1055	2055	3055
.562	14	56	1056	2056	3056
.594	15	59	1059	2059	3059
.625	16	62	1062	2062	3062
.669	17	66	1066	2066	3066
.672		67	1067	2067	3067
.688	18	68	1068	2068	3068
.750	19	75	1075	2075	3075
.781	20	78	1078	2078	3078
.812	21	81	1081	2081	3081
.875	22	87	1087	2087	3087
.938	23	93	1093	2093	3093
.984	24	98	1098	2098	3098
1.000	25	100	1100	2100	3100
1.023	26	102	1102	2102	3102
1.062	27	106	1106	2106	3106
1.125	28	112	1112	2112	3112
1.188	29	118	1118	2118	3118

⌀S SHAFT (REF)	INACTIVE CARBON STEEL MS9013	INACTIVE CARBON STEEL MS16624	SUBST CARBON STEEL 1/ CADMIUM PLATE MS16624	SUBST CARBON STEEL 1/ ZINC COAT MS16624	SUBST CARBON STEEL 1/ PHOSPHATE COAT MS16624
1.250	30	125	1125	2125	3125
1.312	31	131	1131	2131	3131
1.375	32	137	1137	2137	3137
1.438	33	143	1143	2143	3143
1.500	34	150	1150	2150	3150
1.562	35	156	1156	2156	3156
1.625	36	162	1162	2162	3162
1.688	37	168	1168	2168	3168
1.750	38	175	1175	2175	3175
1.772	39	177	1177	2177	3177
1.812	40	181	1181	2181	3181
1.875	41	187	1187	2187	3187
1.969	42	196	1196	2196	3196
2.000	43	200	1200	2200	3200
2.062	44	206	1206	2206	3206
2.125	45	212	1212	2212	3212
2.156	46	215	1215	2215	3215
2.250	47	225	1225	2225	3225
2.312	48	231	1231	2231	3231
2.375	49	237	1237	2237	3237
2.438	50	243	1243	2243	3243
2.500	51	250	1250	2250	3250
2.559	52	255	1255	2255	3255
2.625	53	262	1262	2262	3262
2.688	54	268	1268	2268	3268
2.750	55	275	1275	2275	3275
2.875	56	287	1287	2287	3287
2.938	57	293	1293	2293	3293
3.000	58	300	1300	2300	3300
3.062		306	1306	2306	3306

⌀S SHAFT (REF)	INACTIVE CARBON STEEL MS16624	SUBST CARBON STEEL 1/ CADMIUM PLATE MS16624	SUBST CARBON STEEL 1/ ZINC COAT MS16624	SUBST CARBON STEEL 1/ PHOSPHATE COAT MS16624
3.125	312	1312	2312	3312
3.156	315	1315	2315	3315
2.250	325	1325	2325	3325
3.346	334	1334	2334	3334
3.438	343	1343	2343	3343
3.500	350	1350	2350	3350
3.543	354	1354	2354	3354
3.625	362	1362	2362	3362
3.688	368	1368	2368	3368
3.750	375	1375	2375	3375
3.875	387	1387	2387	3387
3.938	393	1393	2393	3393
4.000	400	1400	2400	3400
4.250	425	1425	2425	3425
4.375	437	1437	2437	3437
4.500	450	1450	2450	3450
4.750	475	1475	2475	3475
5.000	500	1500	2500	3500
5.250	525	1525	2525	3525
5.500	550	1550	2550	3550
5.750	575	1575	2575	3575
6.000	600	1600	2600	3600
6.250	625	1625	2625	3625
6.500	650	1650	2650	3650
6.750	675	1675	2675	3675
7.000	700	1700	2700	3700
7.500	750	1750	2750	3750
8.000	800	1800	2800	3800
8.500	850	1850	2850	3850
9.000	900	1900	2900	3900
9.500	950	1950	2950	3950
10.000	1000	2000	3000	4000

1/ SUBSTITUTE CORROSION RESISTANT STEEL WHEN USED IN FOOD PROCESSING MACHINERY, OR IN FUEL OR LUBRICATION SYSTEMS, OR WHEN USED AT TEMPERATURES OVER 450°F (233°C).

APPROVED 11 DEC 1958 REVISED © FOR CHANGES SEE PAGES 1 THRU 9

5365-0140

TABLE V. SUBSTITUTION TABLE (CROSS REFERENCE OF PART NUMBERS)

Ø S SHAFT (REF)	INACTIVE BERYLLIUM COPPER 1/ MS9012	INACTIVE BERYLLIUM COPPER 1/ MS16624	SUBST BERYLLIUM COPPER 1/ MS16624	Ø S SHAFT (REF)	INACTIVE BERYLLIUM COPPER CAD PLATE 1/ MS16624	SUBST BERYLLIUM COPPER CAD PLATE 1/ MS16624
.125	01	12	5012	.125	1012	5012-1
.156	02	15	5015	.156	1015	5015-1
.188	03	18	5018	.188	1018	5018-1
.197	04	19	5019	.197	1019	5019-1
.219	05	21	5021	.219	1021	5021-1
.236	06	23	5023	.236	1023	5023-1

1/ SUBSTITUTE CORROSION RESISTANT STEEL WHEN USED IN FOOD PROCESSING MACHINERY, OR IN FUEL OR LUBRICATION SYSTEMS, OR WHEN USED AT TEMPERATURES OVER 450°F (233°C).

RECOMMENDED DESIGN LIMITATIONS AND USAGE

(a) INTENDED USE - TO PROVIDE SHOULDERS FOR POSITIONING AND RETAINING MACHINE COMPONENTS ON SHAFTS. TAPERED DESIGN PRINCIPLE PERMITS RINGS TO MAINTAIN PRACTICALLY CONSTANT CIRCULARITY AND PRESSURE AGAINST BOTTOM OF GROOVE, COUNTERACTING CONSIDERABLE CENTRIFUGAL FORCE (SEE TABLE VI). RINGS FOR SHAFT DIAMETERS OVER 4 INCHES ARE SPECIALLY DIMENSIONED TO MAINTAIN BALANCE IN ROTATION. THE USE OF THE FOLLOWING FORMULAS ARE BASED ON THE FACT THAT THE RING WILL NOT FAIL IN COMPRESSION.

LIMITATION ON USE - THE FOLLOWING FORMULAS ARE NOT TO BE USED FOR BRITTLE MATERIALS SUCH AS CAST IRON, ETC.

WARNING - RINGS SHOULD NOT BE OVER EXPANDED DURING INSTALLATION SINCE THIS WILL LEAD TO RING FAILURE. IF RING HAS PLAY BETWEEN THE GROOVE DIAMETER AND THE INSIDE RING DIAMETER THIS INDICATES THAT THE RING HAS BEEN OVER EXPANDED, (PROVIDING GROOVE HAS BEEN MACHINED TO RECOMMENDED DIMENSIONS).

FOR APPROXIMATE SAFETY RPM LIMITS SEE TABLE VI.

TABLE VI. APPROXIMATE SAFETY RPM LIMITS

Ø SHAFT (INCHES)		.125	.500	1	2	3	4	6	8	10
CARBON STEEL AND CORROSION RESISTANT STEEL	RPM LIMIT	80,000	40,000	20,000	10,000	6,700	5,000	3,400	2,500	2,000
BERYLLIUM COPPER	RPM LIMIT	50,000	25,000	13,000	6,400					

(b) ALLOWABLE THRUST LOAD CAPACITY OF THE RINGS. ABUTTING COMPONENTS TO HAVE SHARP CORNERS =

$$P = \frac{\pi STX}{F}$$

WHERE:
P = ALLOWABLE THRUST LOAD (POUNDS)
S = SHAFT DIAMETER (INCHES)
T = RING THICKNESS (INCHES)
X = ULTIMATE SHEAR STRENGTH OF THE RING MATERIAL (PSI) 1/
F = FACTOR OF SAFETY

A SAFETY FACTOR, F = 4, IS RECOMMENDED, SINCE THE RING UNDER LOAD IS SUBJECTED NOT ONLY TO THE PURE SHEAR STRESSES, BUT ALSO TO BENDING STRESSES.

(c) ALLOWABLE LOAD CAPACITY OF GROOVE WALL =

$$P = \frac{\pi SdY}{F}$$

WHERE:
P = ALLOWABLE COMPRESSION LOAD (POUNDS)
S = SHAFT DIAMETER (INCHES)
d = GROOVE DEPTH (INCHES)
Y = YIELD STRENGTH IN COMPRESSION OF THE GROOVE MATERIAL (PSI)
F = FACTOR OF SAFETY

TO INSURE A SAFE WORKING LOAD, A SAFETY FACTOR, F = 2, IS RECOMMENDED.

(d) MINIMUM DISTANCE BETWEEN OUTER GROOVE WALL AND END OF SHAFT =

$$Z = 3d$$

WHERE:
Z = MINIMUM DISTANCE BETWEEN OUTER GROOVE AND END OF SHAFT (INCHES)
d = GROOVE DEPTH (INCHES)

1/ X = 120,000 PSI ULTIMATE SHEAR STRENGTH FOR RINGS UP TO AND INCLUDING .672 INCH SHAFT DIAMETER OF CARBON STEEL OR CORROSION RESISTANT STEEL.
X = 150,000 PSI ULTIMATE SHEAR STRENGTH FOR RINGS .688 INCH AND OVER SHAFT DIAMETER OF CARBON STEEL OR CORROSION RESISTANT STEEL.
X = 110,000 PSI ULTIMATE SHEAR STRENGTH FOR RINGS OF ALL SHAFT DIAMETERS AND OF BERYLLIUM COPPER.

USER ACTIVITIES:
ARMY - AT
NAVY - AS, MC

REVIEWER ACTIVITIES:
ARMY - AV, ER, ME, MI
AIR FORCE - 82
DLA - IS

DISTRIBUTION STATEMENT A. Approved for public release; distribution is unlimited.
This military standard is approved for use by all Departments and Agencies of the Department of Defense. Selection for all new engineering and design applications and for repetitive use shall be made from this document when applicable.

APPROVED 11 DEC 1958 REVISED © FOR CHANGES SEE PAGES 1 THRU 9

(e) DIFFERENTIAL ROTATION -

THE CONDITIONS UNDER WHICH A RETAINING RING MAY BE USED WHEN ADJACENT PARTS ROTATE RELATIVE TO IT, FALL INTO TWO CATEGORIES:

1. WHERE NO THRUST IS EXERTED BY ADJACENT PART; IN THIS CASE, DIFFERENTIAL ROTATION OF RING AND ADJACENT PART CREATES NO ELEMENT OF RISK IN THE APPLICATION OF THE RINGS BECAUSE NO FRICTIONAL TORQUE IS EXERTED BY THE MACHINE PART ON THE RING.

2. CONSIDERATION MUST BE GIVEN TO THE MAGNITUDE OF THE THRUST INVOLVED. THE FRICTION MOMENT MAY NOT EXCEED THE BENDING MOMENT, WHICH THE RING CAN TOLERATE WITHOUT RELEASING ITS PRESSURE AGAINST THE BOTTOM OF THE GROOVE, FORMULATED AS FOLLOWS:

$$fPN \leq \frac{sTE^2}{18} \quad \text{OR} \quad P \leq \frac{sTE^2}{f18N}$$

WHERE:
P = ALLOWABLE THRUST LOAD EXERTED BY ADJACENT PART (POUNDS)
f = COEFFICIENT OF FRICTION
s = WORKING STRESS OF RING UNDER MAXIMUM EXPANSION (PSI) 2/
T = RING THICKNESS (INCHES)
E = GREATEST WIDTH SECTION OF RING (INCHES)
N = NEUTRAL RING DIAMETER (INCHES), FREE DIAMETER PLUS 3/4 E DIMENSION

IN SUCH CASES WHERE DIFFERENTIAL ROTATION OCCURS, THE CALCULATION SHOULD BE BASED ON THE MAXIMUM POSSIBLE VALUE OF THE COEFFICIENT OF FRICTION.

(f) IMPACT CAPACITY OF RING OR GROOVE WALL -

$I_R = \frac{PT}{2}$ - FOR THE RING (INCH POUNDS), ABUTTING COMPONENTS TO HAVE SHARP CORNERS.

$I_G = \frac{Pd}{2}$ - FOR THE GROOVE (INCH POUNDS)

WHERE:
P = ALLOWABLE THRUST LOAD OF RINGS OR GROOVES (POUNDS)
T = RING THICKNESS (INCHES)
I_G = IMPACT CAPACITY OF GROOVE WALL (INCH POUNDS)
d = GROOVE DEPTH (INCHES)
I_R = IMPACT CAPACITY OF RING (INCH POUNDS)

(g) LOAD CAPACITY, WITH THE RETAINED PART RADIUSED OR CHAMFERED -

WHEN THE RADIUS OR CHAMFER OF THE RETAINED PART DOES NOT EXCEED THE MAXIMUM RADIUS ALLOWED FOR THE BOTTOM OF THE RING GROOVE, THE LESSER LOAD CAPACITY COMPUTED FROM THE FORMULAS ON PAGES 7 AND 8 WILL APPLY. THE CORNER RADII AND CHAMFERS LISTED ON PAGES 1 THRU 3 WERE CHOSEN AS LARGE AS POSSIBLE FOR THE RING SIZES INVOLVED AND ARE RELATED TO THE MAXIMUM THRUST LOADS LISTED IN THE TABLE ON PAGE 9. IF THE CORNER RADII OR CHAMFERS ARE SMALLER THAN THOSE LISTED, THEN THE THRUST LOADS INCREASE PROPORTIONALLY, IN ACCORDANCE WITH THE FOLLOWING FORMULAS:

$$P^1 = \frac{P\,CH}{CH^1} \quad \text{OR} \quad P^1 = \frac{PR}{R^1}$$

WHERE:
P^1 = NEW ALLOWABLE THRUST LOAD
P = LISTED ALLOWABLE THRUST LOAD
CH^1 = NEW (SMALLER) CHAMFER
CH = LISTED CHAMFER
R^1 = NEW (SMALLER) CORNER RADIUS
R = LISTED CORNER RADIUS

2/ s = 250,000 PSI WORKING STRESS FOR RINGS OF CARBON STEEL OR CORROSION RESISTANT STEEL
s = 200,000 PSI WORKING STRESS FOR RINGS OF BERYLLIUM COPPER.

APPROVED 11 DEC 1958 REVISED © FOR CHANGES SEE PAGES 1 THRU 9

USER ACTIVITIES:
ARMY - AT
NAVY - AS, MC
ARMY - AV, ER, ME, MI
AIR FORCE - 82
DLA - IS
Selections for all new engineering and design applications and for repetitive use shall be made from this document when applicable.

LIMIT LOADS LISTED BELOW ARE BASED ON RINGS OF BERYLLIUM COPPER (WORKING STRESS 180,000 PSI) FOR SIZES BELOW .250 INCH AND ON RINGS OF STEEL (WORKING STRESS 250,000 PSI) FOR SIZES .250 INCH AND OVER. IF THE ALLOWABLE GROOVE CAPACITY LOADS AS CALCULATED BY USING THE FORMULA ON PAGE 7 ARE LESS, THEN THEY SHOULD BE USED.

TABLE VII. LIMIT LOADS.

NOMINAL RING SIZE		ALLOWABLE THRUST LOAD FOR RING ASSEMBLIES WITH PARTS HAVING MAXIMUM CORNER RADII OR CHAMFERS	
FROM	TO	CARBON STEEL OR CRES	BERYLLIUM COPPER
.125	.156		45 LB
.188	.236		105 LB
.250	.469	470 LB	340 LB
.500	.672	910 LB	650 LB
.688	1.023	1340 LB	950 LB
1.062	1.500	1950 LB	1400 LB
1.562	2.000	3000 LB	2100 LB
2.062	2.688	5000 LB	
2.750	3.438	7350 LB	
3.500	5.000	10500 LB	
5.250	6.000	13500 LB	
6.250	7.000	21000 LB	
7.500	10.000	30000 LB	

USER ACTIVITIES:
ARMY - AT
NAVY - AS, MC

REVIEWER ACTIVITIES:
ARMY - AV, ER, ME, MI
AIR FORCE - 82
DLA - IS

This military standard is approved for use by all Departments and Agencies of the Department of Defense. Selection for all new engineering and design applications and for repetitive use shall be made from this document when applicable.