MIL-A-3920C
21 February 1977
SUPERSEDING
MIL-A-3920B
6 August 1974

MILITARY SPECIFICATION

ADHESIVE, OPTICAL, THERMOSETTING

This specification is approved for use by all Departments and Agencies of the Department of Defense.

1. SCOPE

1.1 Scope. This specification covers a thermosetting liquid resin adhesive for bonding optical elements for use in military optical instruments.

2. APPLICABLE DOCUMENTS

2.1 The following documents, of the issue in effect on date of invitation for bids or request for proposal, form a part of this specification to the extent specified herein.

SPECIFICATIONS

FEDERAL

DD-G-451	Glass Plate, Sheet, Figured (Float, Flat, for Glazing Corrugated Mirrors and other uses)
PPP-B-636	Boxes, Fiber
PPP-B-665	Box, Paperboard, Metal Edged and Components
PPP-C-186	Container, Packaging and Packing for Drugs, Chemicals, and Pharmaceuticals
PPP-T-76	Tape; Pressure Sensitive Adhesive, Paper, Water Resistant

STANDARDS

FEDERAL

FED-STD-406	Plastic, Methods of Testing

Beneficial comments (recommendations, additions, deletions) and any pertinent data which may be of use in improving this document should be addressed to: Department of the Army, Frankford Arsenal, Philadelphia, PA 19137, ATTN: SARFA-MDM by using the self-addressed Standardization Document Improvement Proposal (DD Form 1426) appearing at the end of this document or by letter.

MILITARY

MIL-STD-105	Sampling Procedures and Tables for Inspection by Attributes
MIL-STD-109	Inspection Terms and Definitions
MIL-STD-129	Marking for Shipment and Storage

(Copies of specification, standards, drawings and publications required by suppliers in connection with specific procurement functions should be obtained from the procuring activity or as directed by the contracting officer.)

2.2 Other publications. The following documents form a part of this specification to the extent specified herein. Unless otherwise indicated the issue in effect on date of invitation for bids or request for proposal shall apply.

AMERICAN SOCIETY FOR TESTING AND MATERIALS

D 1084 TEST FOR CONSISTENCY OF ADHESIVE

(Application for copies should be addressed to the American Society for Testing and Materials, 1916 Race Street, Philadelphia, Pa. 19103).

3. REQUIREMENTS

3.1 Qualification. The adhesive furnished under this specification shall be a product which has been tested and passed the qualification tests specified herein, and has been listed on or approved for listing on the applicable Qualified Products Lists (QPL). (see 6.3).

3.2 Adhesive. The optical adhesive shall be thermosetting. There shall be no restriction as to chemical type provided the adhesive meets all requirements specified herein.

3.3 Activator. If necessary, an activator may be used to cure the adhesive and shall be supplied in the proper quantity for activation with the adhesive.

3.4 Refractive index. The refractive index of the polymerized and polymerizable adhesive shall conform to the following:

3.4.1 Polymerized adhesive. The index of refraction of the polymerized adhesive shall be 1.530 to 1.560 at 25° ± 1°C (77 ± 2°F).

3.4.2 Polymerizable adhesive. The index of refraction of the polymerizable adhesive shall be 1.510 to 1.545 at 25° ± 1°C (77 ± 2°F).

3.5 Viscosity. The viscosity of the polymerizable adhesive shall be less than 800 centipoises at 25° ± 1°C (77 ± 2°F).

3.6 Light transmission. The light transmission characteristics of the adhesive shall be greater than or equal to 98.5% within the spectral range of 0.40 to 0.70 micrometers.

3.7 Lint and dust particles

3.7.1 Adhesive. Lint and dust particles per 4 ounces polymerizable adhesive shall not exceed any of the following:

7 particles of 0.1mm maximum length
3 particles of 1.0mm maximum length
1 particles of 5.0mm maximum length

The total number of particles of any size per 4 ounces polymerizable adhesive shall not exceed 7.

3.7.2 Activator. When an activator is used to polymerize the adhesive, the lint and dust particles in that quantity of activator sufficient to polymerize 4 fluid ounces of the adhesive shall not exceed any of the following:

3 particles of 0.5mm maximum length
1 particles of 1.0mm maximum length

The total number of particles, of any size, shall not exceed 3 in the total quantity of activator necessary for 4 fluid ounces of adhesive.

3.8 Cure conditions. The adhesive shall cure with or without the addition of activator. When an activator is added, the adhesive shall cure either at room temperature 25° ± 5°C (77 ± 10°F) in no more than 7 days; or at a temperature not to exceed 74°C (165°F), in no more than 3 hours. When an activator is not added, the adhesive may cure by exposure to ultraviolet radiation.

3.9 Environmental exposure. Ten bonded doublets (see 4.4) shall be subjected to three environmental exposure cycles. Each exposure cycle shall include water immersion, temperature exposure and humidity and shall be conducted in the following sequence:

(a) Immersion in distilled water at 38° ± 2°C (100° ± 4°F) for 22 hours.

(b) Exposure at a temperature of -54° ± 2°C (-65° ± 4°F) for 22 hours.

(c) Exposure to 95 to 100% relative humidity at 71° ± 1°C (160° ± 2°F) for 22 hours.

Subsequent to the environmental cycles, the bonding layer shall be examined for evidence of edge separation, feathering, voids, or other forms of bond-

ing layer disintegration. Each bonded doublet shall be evaluated for its bonding layer defect and assigned the corresponding weighted value, as defined in Table I for its particular defect. The weighted value for the ten doublets shall be arithmetically averaged and this average weighted value shall be less than five.

3.10 Cold exposure. Five bonded doublets shall be exposed to a temperature of -62° ± 2°C (-80° ± 4°F) for five hours. Subsequent to this cold temperature exposure, the bonding layer shall be examined for evidence of edge separation, feathering, voids or other forms of bonding layer disintegration. Each bonded doublet shall be evaluated for its bonding layer defect and assigned the corresponding weighted value as defined in Table I, for its particular defect. The weighted value for the five doublets shall be arithmetically averaged, and this average weighted value shall be less than five.

3.11 Instruction sheet. The manufacturer shall provide an instruction sheet or pamphlet when requesting qualification and also with each unit package of adhesive outlining instructions for its use. The instruction sheet shall include as a minimum the following information:

(a) Manufacturer's designation for the adhesive and a description of the base polymer(s) and modifiers, if any, used in the adhesive.

(b) Mixing instructions, including type and amount of activators, if required, and temperature controls during mixing and minimum pot life of the mixed adhesive.

(c) Complete processes and treatments for preparing the glass surfaces prior to their bonding with the adhesive.

(d) Application instructions including the method of applying the adhesive to a glass surface and joining two glass surfaces together.

(e) Curing times and temperatures, including any pre-cure or post-cure procedures.

(f) Suggested methods for decementing any poorly bonded assemblies.

(g) Necessary safety precautions to be observed throughout all operations.

(h) Any other pertinent information relative to the use and storage of the adhesive or activator, or both.

4. QUALITY ASSURANCE PROVISIONS

4.1 Responsibility for inspection. Unless otherwise specified in the contract or purchase order, the supplier is responsible for the performance of all inspection requirements as specified herein. Except as otherwise specified, the supplier may utilize his own facilities or any facilities

suitable for the performance of the inspection requirements specified herein, unless disapproved by the government. The government reserves the right to perform any of the inspections set forth in the specification where such inspections are deemed necessary to assure that supplies and services conform to prescribed requirements.

TABLE I

WEIGHTED VALUE	BONDING LAYER DEFECT DESCRIPTION	DEFECT TOLERANCE
0	Perfect	No defects in bonded surface
1	A separation from bevel into bonded surface at the periphery for 0 - 49% of the circumference.	Up to 1.0mm penetration
2	A separation from bevel into bonded surface at the periphery for 50 - 100% of the circumference.	Up to 1.0mm penetration
3	Same as #1	Up to 2.0mm penetration
4	Same as #2	Up to 2.0mm penetration
5	Same as #1	Up to 3.0mm penetration or bubble, void or separation in the bonded surface up to 0.40mm in diameter
6	A separation from bevel into bonded surface at the periphery for 50 - 100% of the circumference or a void, bubble, or separation in bonded surface.	Up to 3.0mm penetration or a bubble, void, or separation in the bonded surface greater than 0.41mm diameter but less than 1.0mm
7	A separation from bevel into bonded surface at the periphery for 0 - 49% of the circumference of void, bubble or separation in bonded surface	Up to 4.0mm penetration or a bubble, void or separation greater than 1.1mm in diameter in bonded surface
8	Same as #6	Same as #7
9	Any film condition worse than #8 with description noted	Same as #7

4.1.1 General provisions. Definitions of inspection terms shall be as listed in MIL-STD-109.

4.2 Classification of tests. The inspection and testing of the adhesive shall be classified as follows:

(a) Qualification test (4.5)

(b) Quality conformance tests (4.6)

4.3 Preparation of glass discs. Glass discs as shown in Figure 1 shall be prepared in sufficient quantities to furnish the necessary number of bonded doublets required for the applicable tests of this specification. The optical characteristics of these discs shall be equal.

4.4 Preparation of bonded doublets. Glass discs, as specified in 4.3, shall be thoroughly cleaned with ethyl alcohol and a camel hair brush prior to bonding. The adhesive shall be applied dropwise to the center of one of the cleaned discs and another disc placed on the adhesive-laden surface. Pressure shall be applied to spread the adhesive film evenly between the adherends employing rotary movement of the top element to obtain a bubble free film. Excessive adhesive shall be wiped from the periphery of the doublet and the film shall be cured in accordance with the manufacturer's instructions and in compliance with 3.8.

4.5 Qualification tests

4.5.1 Qualification tests Qualification tests shall consist of all tests of this specification. (See 6.3)

4.5.1.1 Sample size. The sample size of material for qualification testing shall be as directed by the qualifying activity.

4.5.1.2 Manufacturer's data. Two copies of the manufacturer's test report, containing complete test data certifying that the material submitted for qualification conforms to this specification shall be submitted with qualification test samples. Location and identity of the plant which produced the samples tested shall also be stated.

4.5.1.3 Instruction sheet. Duplicate copies of the manufacturer's instructions for use of the adhesive shall be furnished with the qualification samples. (See 3.11)

4.5.1.4 Refractive index

4.5.1.4.1 Polymerized adhesive. The index of refraction of the polymerized adhesive shall be measured using an Abbe refractometer at 25° ± 1°C (77° ± 1.8°F) in accordance with Method 3011 of FED-STD-406 to determine conformance with 3.4.1.

4.5.1.4.2 Polymerizable adhesive. The index of refraction of polymerizable adhesive shall be measured with an Abbe refractometer at 25° ± 1°C (77° ± 2°F) using a white-light source in accordance with Method 3011 of FED-STD-406 to determine conformance with 3.4.2.

4.5.1.5 Viscosity. The viscosity of the polymerizable adhesive shall be measured with a Brookfield Visometer, corrected to 25° ± 1°C (77° ± 2°F), in accordance with Method B, ASTM 1084.

4.5.1.6 Light transmission. The light transmission characteristics of the adhesive shall be determined using a dual-beam spectrophotometer. The test shall be performed by applying a layer of standard mineral oil (refractive index 1.47) between two glass discs to form a doublet. Prepare a total of two doublets in this manner. One of these doublets is then placed in both the reference and sample beam of the spectrophotometer. The spectrophotometer is than calibrated to obtain a 100% level throughout the visible spectrum from 0.40 to 0.70 micrometers. Doublets bonded with the adhesive under examination are then individually placed in the sample compartment (the standard mineral oil sample is replaced by the adhesive bonded doublet) and measured for compliance with 3.6.

4.5.1.7 Dust and lint content. The cleanliness of the polymerizable adhesive and activator, if required, shall be inspected by placing the sample between two polarizing filters whose faces are placed parallel and whose axes are crossed. A light source is placed in front of the first filter and viewed from behind the second filter to determine conformance with 3.7.

4.5.1.8 Environmental exposure. Ten bonded doublets, prepared in accordance with 4.4, shall be subjected to three environmental exposure cycles (of 3 tests each cycle) as specified in 3.9. After each test within the cycle, the bonded doublets shall be allowed to cool or warm to room temperature before proceeding to the next test. Subsequent to exposure to the three environmental cycles, the bonded doublets shall be examined with the aid of one to three power (1X to 3X) magnification to determine conformance to 3.9.

NOTE: Caution shall be exercised throughout this environmental exposure subjecting the doublets to thermal shock.

4.5.1.9 Cold exposure. Five bonded doublets, prepared in accordance with 4.4, shall be subjected to the cold exposure specified in 3.10. After exposure, the doublets shall be allowed to warm to ambient room temperature. The bonded doublets shall then be examined with the aid of one to three power (1X to 3X) magnification to determine conformance to 3.10.

NOTE: Caution shall be exercised throughout this cold exposure to avoid subjecting the bonded doublets to thermal shock.

4.5.2 Qualification retest. Unless otherwise specified by the procuring activity, adhesives which have previously passed the qualification tests but have subsequently been modified in any manner, shall satisfactorily pass retesting of the material in order to retain qualification approval. Qualification tests may be repeated on material previously found satisfactory at any time at the option of the activity responsible for qualification approval. Failure will constitute cause for removal from Qualified Products List.

4.6 Quality conformance test. Quality conformance test shall consist of the sampling plans specified in 4.6.1 and 4.6.2.

4.6.1 Sampling for inspection and acceptance. Two unit bottles of adhesive and two bottles of activator (sufficient to cure the adhesive) if required, shall be selected at random from each lot. The adhesive in each container shall be subjected to the following determinations. If either sample fails any test, the lot shall be rejected.

(a) Refractive index of polymerizable adhesive (4.5.1.5.2).

(b) Viscosity (4.5.1.5).

4.6.2 Inspection of filled containers. A random sample shall be selected from each lot in accordance with MIL-STD-105 at inspection level 1, and at Acceptance Quality Level (AQL) of 2.5 percent defective, to visually verify conformance to this specification regarding fill, closure, marking and other requirements not involving tests.

4.6.3 Lot formation. A lot shall consist of all the adhesive of the same type manufactured and offered for delivery at one time.

5. PACKAGING

5.1 Preservation-Packaging. Preservation-packaging shall be level A.

5.1.1 Unit packaging. One bottle containing the adhesive and one bottle containing the activator (if required) shall be cushioned and immobilized in a metal edge paper board box conforming to style A of PPP-B-665, along with one instruction sheet (see 3.11).

5.1.2 Adhesive and Activator Containers. The adhesive shall be contained in amber glass bottles, or polyethylene or polypropylene plastic bottles. The activator, if required, shall be placed in suitably sized polyethylene or polypropylene plastic bottles. Both the activator and adhesive bottles shall conform to Group A of PPP-C-186. The adhesive shall be furnished in 1 ounce or 4 ounce containers, as specified (see 6.2). The quantity of activator shall be in proportion to the quantity of adhesive as is necessary for proper use.

5.1.3 Closure of the adhesive bottle. The closure for the adhesive bottle shall be a polypropylene or polyethylene screw cap which securely closes and seals the adhesive bottle. If required, a shrinkable plastic neck seal may be used to keep the screw cap in place.

5.1.4 Closure of the activator bottle. When activator is required, the closure shall consist of a dispenser which permits the controlled dispensing of uniform drops of activator and a plastic screw cap of polyethylene, polypropylene or polystyrene. If required, a shrinkable plastic neck seal may be used to keep the screw cap in place.

5.2 Packing. Packing shall be level A. Unit packages shall be immobilized in a fiberboard box conforming to any compliance symbol and any style of PPP-B-636. The box shall be closed by applying pressure sensitive tape conforming to PPP-T-76 over all seams and the manufacturer's joint (see Figure 1 of PPP-B-636).

5.3 Marking

5.3.1 Normal markings. Unit packages, and shipping containers shall be marked in accordance with the requirements of MIL-STD-129.

5.3.2 Special markings. Each unit package shall be clearly and legibly labeled to include the following information.

ADHESIVE, OPTICAL THERMOSETTING
Specification MIL-A-3920C
Manufacturer's name and address
Volume contained
Lot number
Manufacturer's designation
Date of manufacture
Store in cool, dark place

6. NOTES

6.1 Intended use. The adhesive covered by this specification is intended for bonding optical elements in military optical systems.

6.2 Ordering data. Procurements should specify the following:

(a) Title, number and date of this specification
(b) Quantity desired
(c) Size of Container: 1oz or 4oz (see 5.1.2)

6.3 Qualification. With respect to products requiring qualification, awards will be made only for products which are at the time set for opening of bids, qualified for inclusion in the applicable Qualified Products List

whether or not such products have actually been so listed by that date. The attention of the suppliers is called to this requirement, and manufacturers are urged to arrange to have the products that they propose to offer to the Federal Government tested for qualification in order that they may be eligible to be awarded contracts or orders for the products covered by this specification. The activity responsible for the Qualified Products List is Frankford Arsenal, Philadelphia, PA 19137, ATTN: SARFA-MDM and information pertaining to qualification of products may be obtained from that activity.

Custodian:

Navy - OS
Army - MU

Review Activity:
Army - MR

User Activity:
Army MI

Preparing Activity:

Army - MU

Project No. 8040-0379

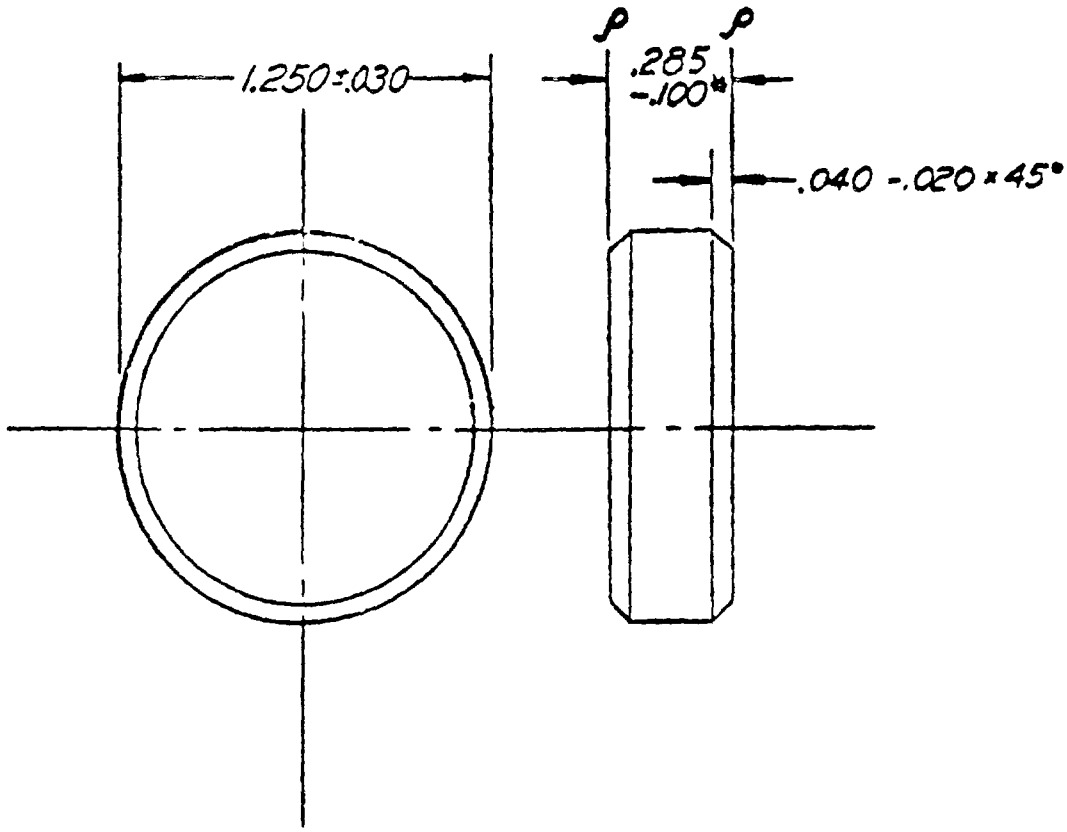

TEST DISC

MATERIAL: FLAT GLASS TYPE I SILVERING QUALITY
SPEC. DD-G-451

SURFACES MARKED "P" POLISHED TO SILVERING QUALITY OR BETTER, RIM AND CHAMFER GROUND.

* NOTE: ENTIRE LOT SHALL HAVE A TOTAL THICKNESS VARIATION NOT TO EXCEED .050

FIGURE 1: GLASS DISC

FOLD

POSTAGE AND FEES PAID
DEPARTMENT OF THE ARMY
DOD – 314

OFFICIAL BUSINESS
PENALTY FOR PRIVATE USE $300

Commander
Frankford Arsenal
ATTN: SARFA-MDM
Phila., PA 19137

FOLD

STANDARDIZATION DOCUMENT IMPROVEMENT PROPOSAL

OMB Approval
No 22-R255

INSTRUCTIONS The purpose of this form is to solicit beneficial comments which will help achieve procurement of suitable products at reasonable cost and minimum delay or will otherwise enhance use of the document DoD contractors government activities or manufacturers/ vendors who are prospective suppliers of the product are invited to submit comments to the government Fold on lines on reverse side staple in corner and send to preparing activity Comments submitted on this form do not constitute or imply authorization to waive any portion of the referenced document(s) or to amend contractual requirements Attach any pertinent data which may be of use in improving this document If there are additional papers, attach to form and place both in an envelope addressed to preparing activity

DOCUMENT IDENTIFIER AND TITLE

MIL-A-3920C, Adhesive, Optical, Thermosetting

NAME OF ORGANIZATION AND ADDRESS

CONTRACT NUMBER

MATERIAL PROCURED UNDER A

☐ DIRECT GOVERNMENT CONTRACT ☐ SUBCONTRACT

1 HAS ANY PART OF THE DOCUMENT CREATED PROBLEMS OR REQUIRED INTERPRETATION IN PROCUREMENT USE?

A GIVE PARAGRAPH NUMBER AND WORDING

B RECOMMENDATIONS FOR CORRECTING THE DEFICIENCIES

2 COMMENTS ON ANY DOCUMENT REQUIREMENT CONSIDERED TOO RIGID

3 IS THE DOCUMENT RESTRICTIVE?

☐ YES ☐ NO *(If "Yes", in what way?)*

4 REMARKS

SUBMITTED BY *(Printed or typed name and address - Optional)*

TELEPHONE NO

DATE

DD FORM 1 JAN 72 1426

REPLACES EDITION OF 1 JAN 68 WHICH MAY BE USED